YAMAHA

XV16AL/XV16ALC
XV16ATL/XV16ATLC

SERVICE MANUAL

LIT-11616-12-56

4WM-28197-E0

EAS00001

XV16AL/XV16ALC
XV16ATL/XV16ATLC
SERVICE MANUAL
© 1998 by Yamaha Motor Corporation, U.S.A.
First Edition, October 1998
All rights reserved. Any reproduction or unauthorized use without the written permission of Yamaha Motor Corporation, U.S.A. is expressly prohibited.
Printed in U.S.A.
P/N LIT-11616-12-56

EAS00003

NOTICE

This manual was produced by the Yamaha Motor Company, Ltd. primarily for use by Yamaha dealers and their qualified mechanics. It is not possible to include all the knowledge of a mechanic in one manual. Therefore, anyone who uses this book to perform maintenance and repairs on Yamaha vehicles should have a basic understanding of mechanics and the techniques to repair these types of vehicles. Repair and maintenance work attempted by anyone without this knowledge is likely to render the vehicle unsafe and unfit for use.

This model has been designed and manufactured to perform within certain specifications in regard to performance and emissions. Proper service with the correct tools is necessary to ensure that the vehicle will operate as designed. If there is any question about a service procedure, it is imperative that you contact a Yamaha dealer for any service information changes that apply to this model. This policy is intended to provide the customer with the most satisfaction from his vehicle and to conform with federal environmental quality objectives.

Yamaha Motor Company, Ltd. is continually striving to improve all of its models. Modifications and significant changes in specifications or procedures will be forwarded to all authorized Yamaha dealers and will appear in future editions of this manual where applicable.

This Service Manual contains information regarding periodic maintenance to the emission control system. Please read this material carefully.

NOTE:
Designs and specifications are subject to change without notice.

EAS00004

IMPORTANT MANUAL INFORMATION

Particularly important information is distinguished in this manual by the following.

⚠ The Safety Alert Symbol means ATTENTION! BECOME ALERT! YOUR SAFETY IS INVOLVED!

⚠ WARNING Failure to follow WARNING instructions could result in severe injury or death to the motorcycle operator, a bystander or a person checking or repairing the motorcycle.

CAUTION: A CAUTION indicates special precautions that must be taken to avoid damage to the motorcycle.

NOTE: A NOTE provides key information to make procedures easier or clearer.

EAS00007

HOW TO USE THIS MANUAL

This manual is intended as a handy, easy-to-read reference book for the mechanic. Comprehensive explanations of all installation, removal, disassembly, assembly, repair and check procedures are laid out with the individual steps in sequential order.

① The manual is divided into chapters. An abbreviation and symbol in the upper right corner of each page indicate the current chapter.
Refer to “SYMBOLS”.

② Each chapter is divided into sections. The current section title is shown at the top of each page, except in Chapter 3 (“PERIODIC CHECKS AND ADJUSTMENTS”), where the sub section title(s) appears.

③ Sub section titles appear in smaller print than the section title.

④ To help identify parts and clarify procedure steps, there are exploded diagrams at the start of each removal and disassembly section.

⑤ Numbers are given in the order of the jobs in the exploded diagram. A circled number indicates a disassembly step.

⑥ Symbols indicate parts to be lubricated or replaced.
Refer to “SYMBOLS”.

⑦ A job instruction chart accompanies the exploded diagram, providing the order of jobs, names of parts, notes in jobs, etc.

⑧ Jobs requiring more information (such as special tools and technical data) are described sequentially.

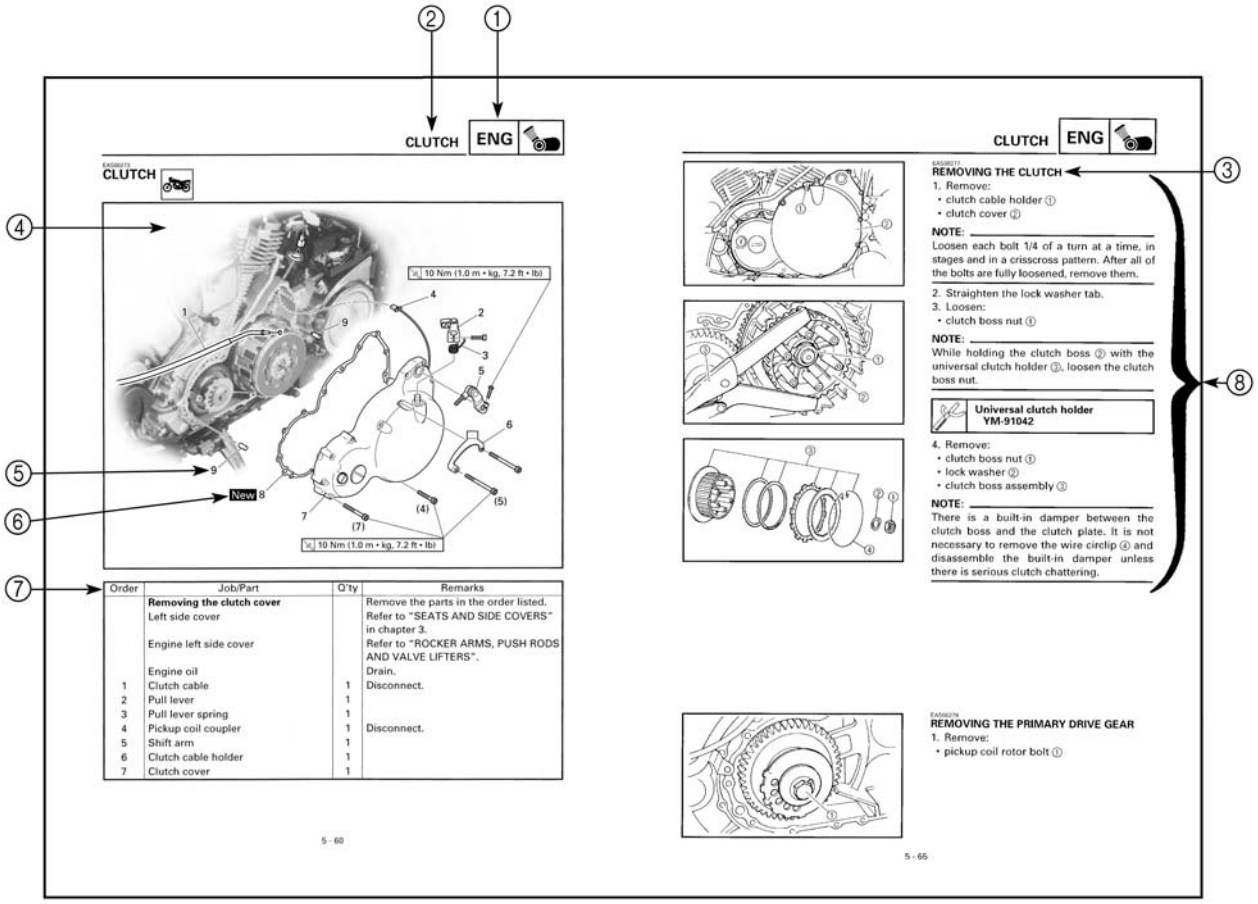

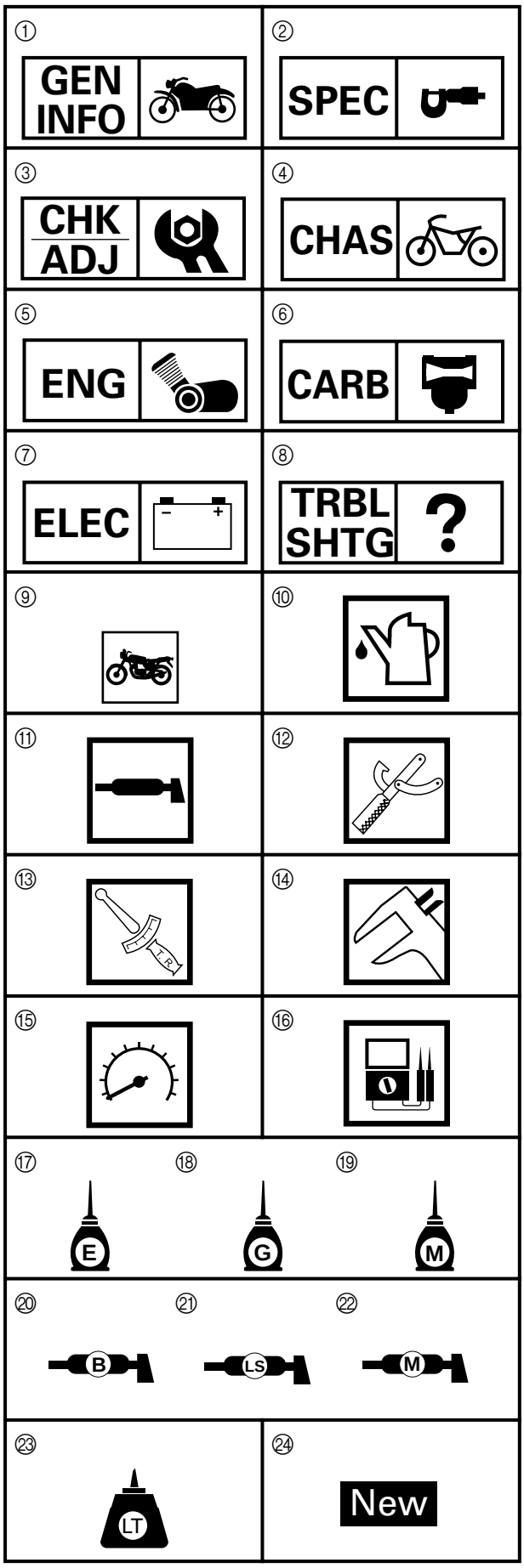

****

SYMBOLS

The following symbols are not relevant to every vehicle.

Symbols ① to ⑧ indicate the subject of each chapter.

① General information
② Specifications
③ Periodic checks and adjustments
④ Chassis
⑤ Engine
⑥ Carburetor
⑦ Electrical system
⑧ Troubleshooting

Symbols ⑨ to ⑯ indicate the following.

⑨ Serviceable with engine mounted
⑩ Filling fluid
⑪ Lubricant
⑫ Special tool
⑬ Tightening torque
⑭ Wear limit, clearance
⑮ Engine speed
⑯ Electrical data

Symbols ⑰ to ㉒ in the exploded diagrams indicate the types of lubricants and lubrication points.

⑰ Engine oil
⑱ Gear oil
⑲ Molybdenum disulfide oil
⑳ Wheel bearing grease
㉑ Lithium soap base grease
㉒ Molybdenum disulfide grease

Symbols ㉓ to ㉔ in the exploded diagrams indicate the following.

㉓ Apply locking agent (LOCTITE®).
㉔ Replace the part.

****

TABLE OF CONTENTS

GENERAL INFORMATION	GEN INFO 1
SPECIFICATIONS	SPEC 2
PERIODIC CHECKS AND ADJUSTMENTS	CHK/ADJ 3
CHASSIS	CHAS 4
ENGINE	ENG 5
CARBURETION	CARB 6
ELECTRICAL SYSTEM	ELEC 7
TROUBLESHOOTING	TRBL SHTG 8

CONTENTS
GENERAL INFORMATION

MOTORCYCLE IDENTIFICATION 1-1
VEHICLE IDENTIFICATION NUMBER 1-1
MODEL CODE 1-1

FEATURES 1-2

IMPORTANT INFORMATION 1-6
PREPARATION FOR REMOVAL AND DISASSEMBLY 1-6
REPLACEMENT PARTS 1-6
GASKETS, OIL SEALS AND O-RINGS 1-6
LOCK WASHERS/PLATES AND COTTER PINS 1-7
BEARINGS AND OIL SEALS 1-7
CIRCLIPS 1-7

CHECKING THE CONNECTIONS 1-8

SPECIAL TOOLS 1-9

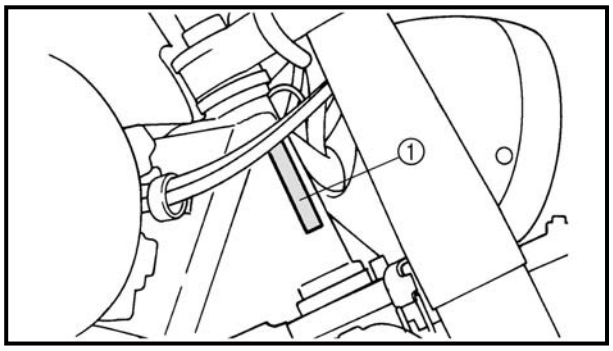

EAS00014

GENERAL INFORMATION

MOTORCYCLE IDENTIFICATION

EAS00017

VEHICLE IDENTIFICATION NUMBER

The vehicle identification number ① is stamped into the right side of the steering head pipe.

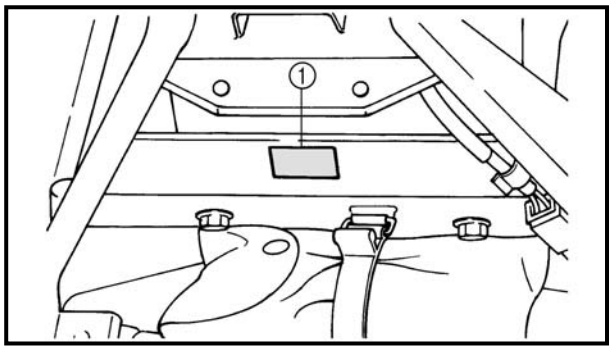

EAS00018

MODEL CODE

The model code label ① is affixed to the frame. This information will be needed to order spare parts.

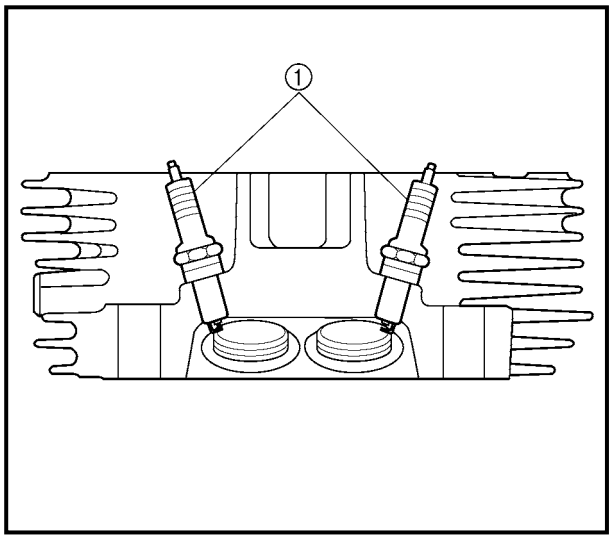

EAS00019
FEATURES

Twin spark plugs

For this model, two spark plugs are incorporated in each cylinder.
By using two spark plugs, the combustion time in the combustion chamber is shortened in an attempt to improve torque.

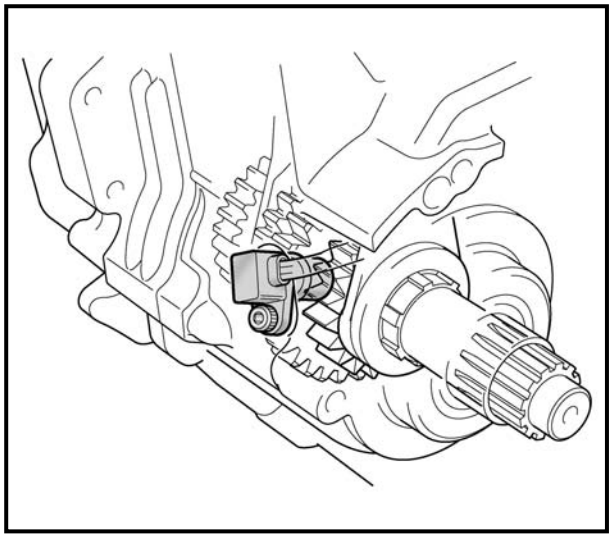

Speed sensor

The speed sensor is installed to the crankcase and it detects the number of passing gears while the vehicle is running in 5th gear and sends the information out as an electrical signal to the ignitor unit.

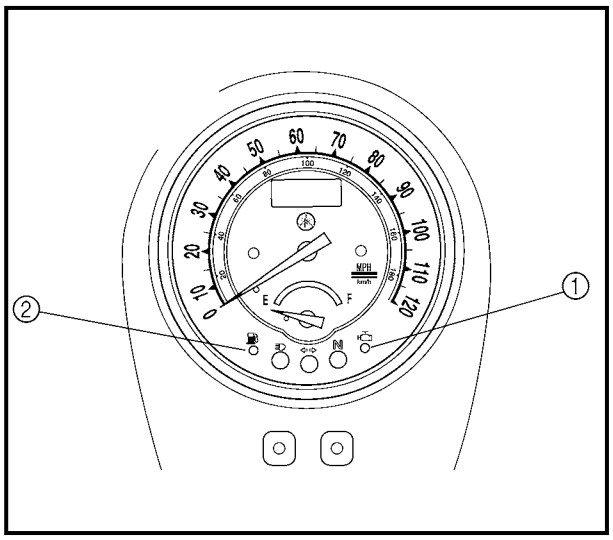

Self-diagnosis device

This model is equipped with a self-diagnosis device that has four functions.
The engine trouble indicator light will come on or flash if trouble occurs in an engine monitoring circuit.

Circuit	Indicator lights	Number of flashes
Throttle position sensor	Engine trouble indicator light ①	3
Speed sensor	Engine trouble indicator light ①	4
Solenoid	Engine trouble indicator light ①	6
Fuel level meter	Fuel level indicator light ②	8

Refer to “SELF-DIAGNOSIS” in chapter 7.

Auto decompression mechanism

The auto decompression mechanism occurs when the engine is started. When the engine is started, the decompression cam and pin raise the exhaust valve lifters, push the push rods, move the rocker arms, and lower the exhaust valves which compress the cylinder. When the cylinder is compressed, pressure is released immediately, resulting in smoother engine starting capabilities and smoother crankshaft revolutions.

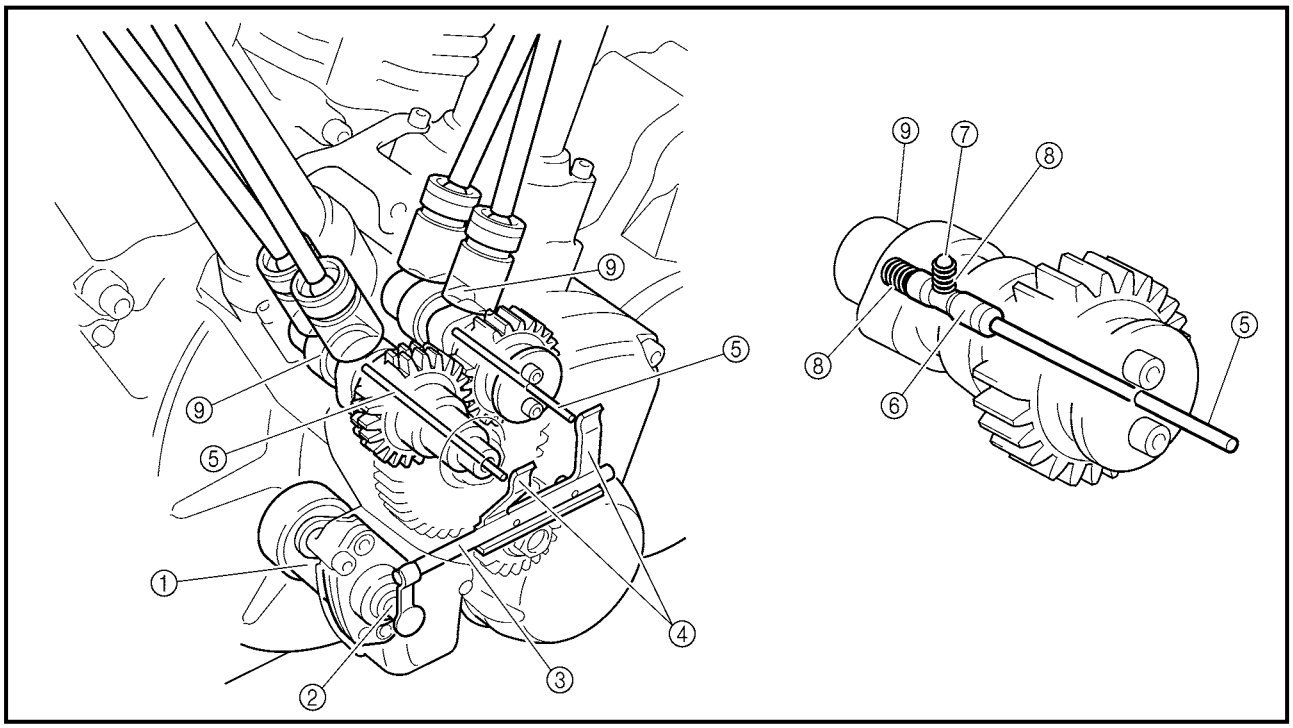

① Decompression solenoid
② Decompression solenoid rod
③ Decompression connector
④ Decompression lever
⑤ Decompression push rod
⑥ Decompression cam
⑦ Pin
⑧ Spring
⑨ Camshaft

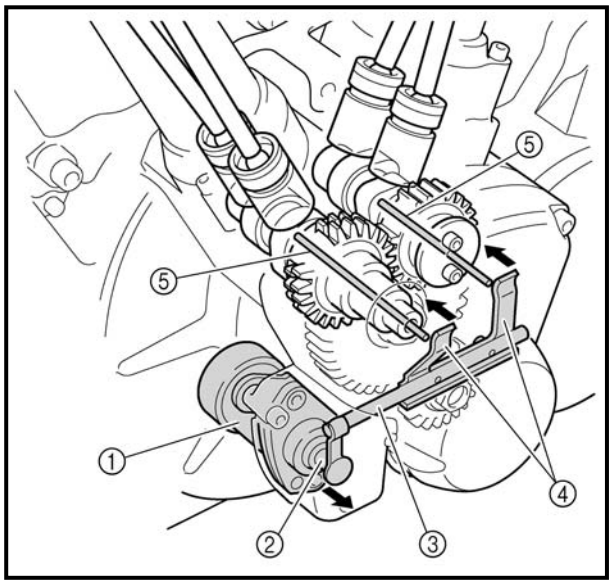

Operation

1. When the starter switch is pushed, electricity is run to the decompression solenoid ① causing it to push out the decompression solenoid rod ②.
2. When the decompression solenoid rod is pushed out, the decompression connector ③ moves the decompression levers ④ in the direction indicated by the arrows, and then the levers push the decompression rods ⑤ toward the camshaft side.

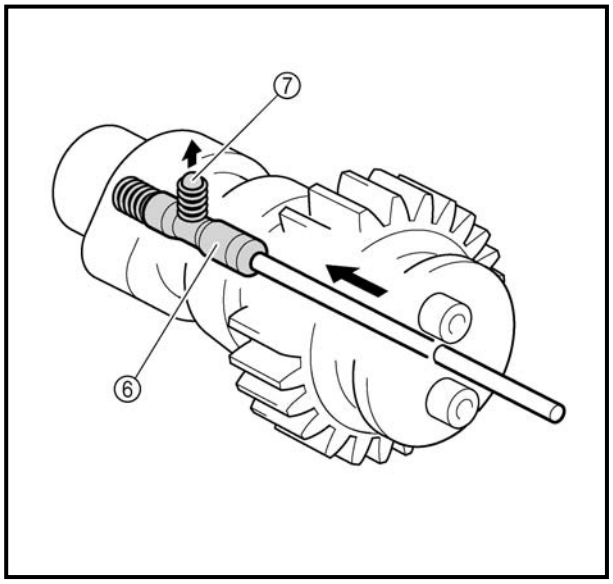

3. The decompression cam ⑥ is pushed in the direction indicated by the arrow, and then the pin ⑦ raises the projection of the decompression cam.

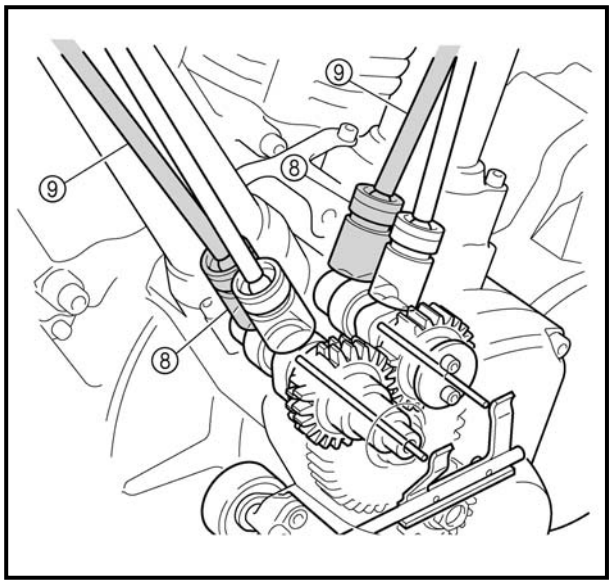

4. When the camshaft is rotated by the self-timing motor, the exhaust valve lifters ⑧ are lifted by the pin just before top dead center (TDC) and the exhaust valve push rod ⑨ and valve rocker arms are operated. Thus, opening the exhaust valve becomes easy.
5. When the engine starts and reaches a specific engine speed the decompression solenoid is turned off and the decompression system stops operating.

Hydraulic valve lifters

Since the hydraulic valve-lifting mechanism maintains a valve clearance of zero, periodic valve clearance adjustments are unnecessary.

The advantages of this system as compared to conventional techniques include the following: mechanical noise is reduced, the camshaft action on the valves remains unaffected by engine speed or temperature, and the valve timing is kept stable.

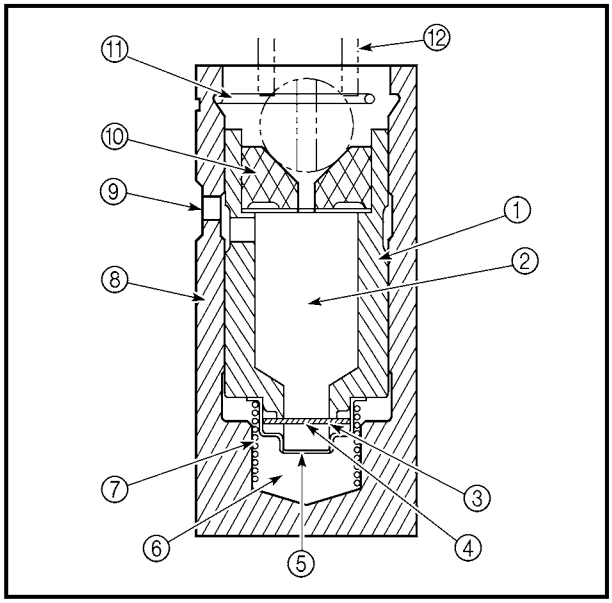

① Plunger
② Oil reservoir
③ Check valve spring
④ Check valve
⑤ Spring retainer
⑥ High-pressure chamber
⑦ Plunger spring
⑧ Valve lifter body
⑨ Oil supply inlet
⑩ Push rod cup
⑪ Plunger retaining clip
⑫ Valve push rod

The hydraulic valve-lifting system functions as follows:

1. As the camshaft rotates, the valve lifter is pushed up by the passing cam lobe.
2. Since the check valve ④ prevents the engine oil contained inside the high-pressure chamber from escaping, the plunger ① moves up along with the valve lifter body ⑧ and pushes up the push rod, causing the valve to be lifted.
3. As the camshaft continues to rotate, the valve lifter moves back down to its original position, where it remains while the cam heel passes.

When a positive valve clearance is caused by either heat expansion of the cylinder head or engine oil leaking from the valve lifter during stage 2, the plunger, which no longer receives pressure from the push rod, is pushed up by the plunger spring ⑦. As a result, the valve clearance is zeroed and engine oil is allowed to return to the high-pressure chamber from the reservoir ② through the check valve ④.

When, on the contrary, a negative valve clearance occurs (this is the case when the cam heel is passing the valve lifter, but the rocker arm, pushed by the push rod, is lifting the valve), the plunger ① continues to receive pressure from the valve push rod. As engine oil contained inside the high-pressure chamber leaks from the gaps between the valve lifter body ⑧ and the plunger ① as well as between the valve lifter body ⑧ and the check valve ④, the plunger ① moves down and the valve clearance is zeroed.

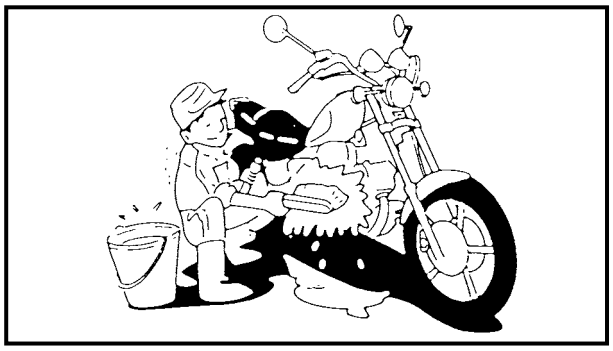

EAS00020
IMPORTANT INFORMATION

PREPARATION FOR REMOVAL AND DISASSEMBLY

1. Before removal and disassembly, remove all dirt, mud, dust, and foreign material.

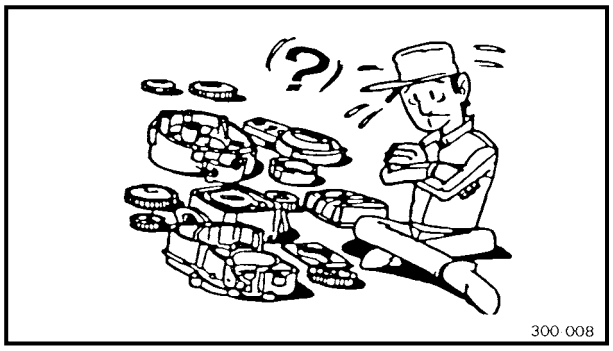

2. Use only the proper tools and cleaning equipment.
   Refer to “SPECIAL TOOLS”.
3. When disassembling, always keep mated parts together. This includes gears, cylinders, pistons, and other parts that have been “mated” through normal wear. Mated parts must always be reused or replaced as an assembly.
4. During disassembly, clean all of the parts and place them in trays in the order of disassembly. This will speed up assembly and allow for the correct installation of all parts.
5. Keep all parts away from any source of fire.

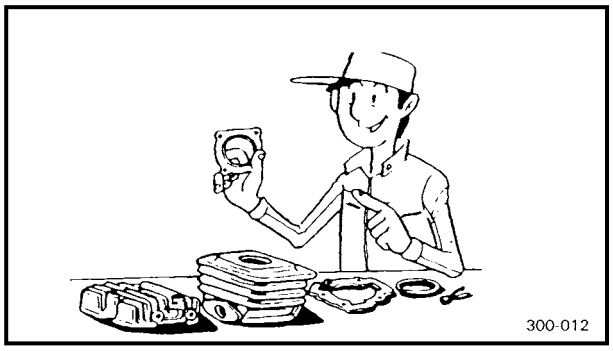

EAS00021
REPLACEMENT PARTS

Use only genuine Yamaha parts for all replacements. Use oil and grease recommended by Yamaha for all lubrication jobs. Other brands may be similar in function and appearance, but inferior in quality.

EAS00022
GASKETS, OIL SEALS AND O-RINGS

1. When overhauling the engine, replace all gaskets, seals, and O-rings. All gasket surfaces, oil seal lips, and O-rings must be cleaned.
2. During reassembly, properly oil all mating parts and bearings and lubricate the oil seal lips with grease.

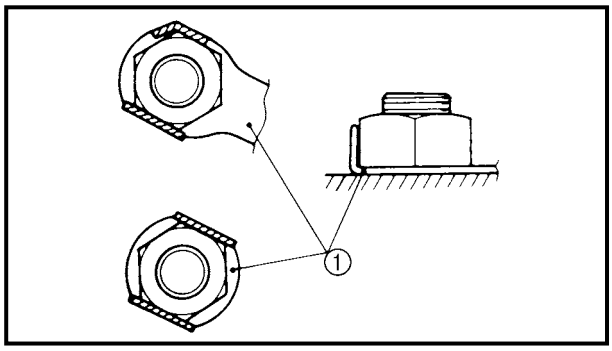

EAS00023
LOCK WASHERS/PLATES AND COTTER PINS

After removal, replace all lock washers/plates ① and cotter pins. After the bolt or nut has been tightened to specification, bend the lock washer tabs and the cotter pin ends along a flat of the bolt or nut.

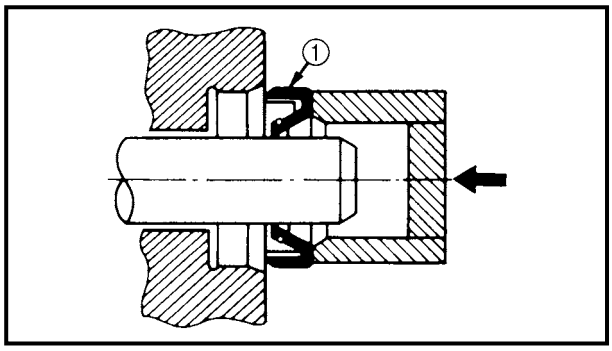

EAS00024
BEARINGS AND OIL SEALS

1. Install bearings and oil seals so that the manufacturer's marks or numbers are visible. When installing oil seals, lubricate the oil seal lips with a light coat of lithium soap base grease. Oil bearings liberally when installing, if appropriate.

① Oil seal

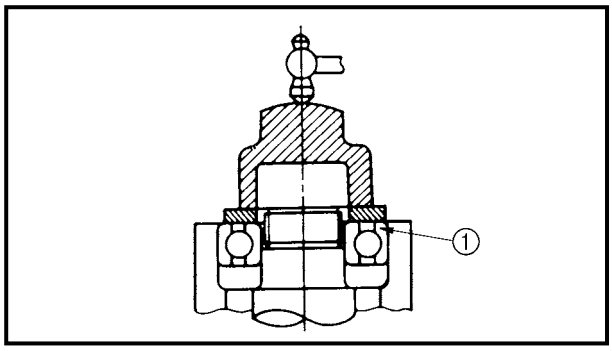

CAUTION:

Do not spin bearings with compressed air because this will damage the bearing surfaces.

① Bearing

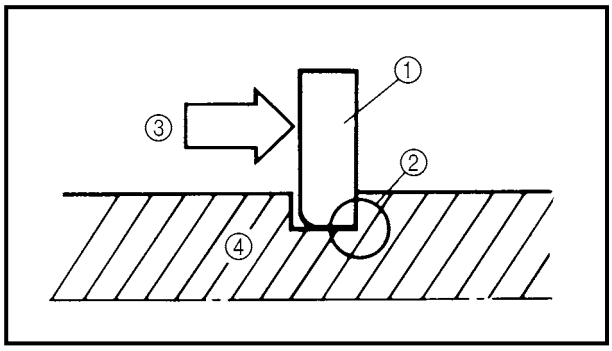

EAS00025
CIRCLIPS

Before reassembly, check all circlips carefully and replace damaged or distorted circlips. Always replace piston pin clips after one use. When installing a circlip ①, make sure the sharp-edged corner ② is positioned opposite the thrust ③ that the circlip receives.

④ Shaft

EAS00026
CHECKING THE CONNECTIONS

Check the leads, couplers, and connectors for stains, rust, moisture, etc.

1. Disconnect:
   - lead
   - coupler
   - connector

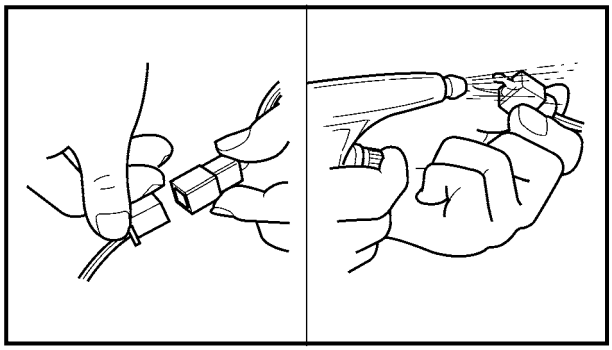

2. Check:
   - lead
   - coupler
   - connector
     Moisture → Dry with an air blower.
     Rust/stains → Connect and disconnect several times.

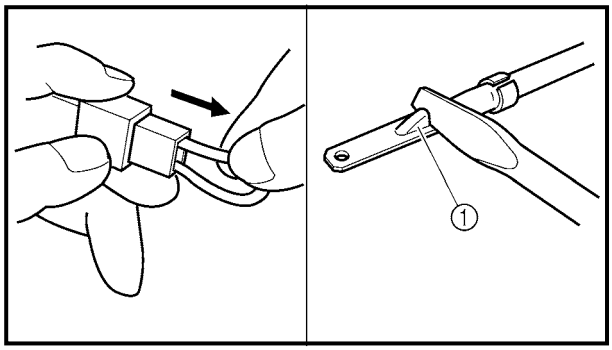

3. Check:
   - all connections
     Loose connection → Connect properly.

NOTE:
If the pin ① on the terminal is flattened, bend it up.

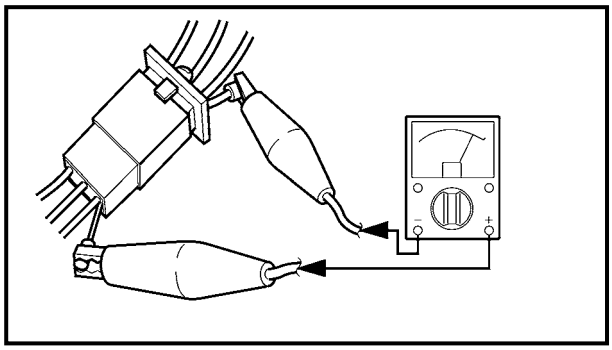

4. Connect:
   - lead
   - coupler
   - connector

NOTE:
Make sure all connections are tight.

5. Check:
   - continuity
     (with the pocket tester)

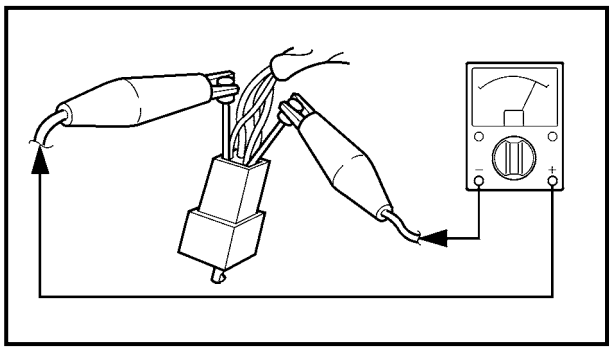

Pocket tester
YU-03112

NOTE:
- If there is no continuity, clean the terminals.
- When checking the wire harness, perform steps (1) to (3).
- As a quick remedy, use a contact revitalizer available at most part stores.

EAS00027
SPECIAL TOOLS

The following special tools are necessary for complete and accurate tune-up and assembly. Use only the appropriate special tools as this will help prevent damage caused by the use of inappropriate tools or improvised techniques. Special tools, part numbers, or both may differ depending on the country.
When placing an order, refer to the list provided below to avoid any mistakes.

Tool No.	Tool name/Function	Illustration
YM-01080-A	Flywheel puller This tool is used to remove the generator rotor.	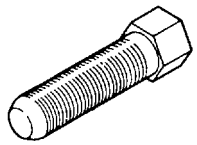
T-handle YM-01326 Damper rod holder YM-1300-1	T-handle Damper rod holder These tools are used to hold the cartridge cylinder when loosening or tightening the cartridge cylinder bolt.	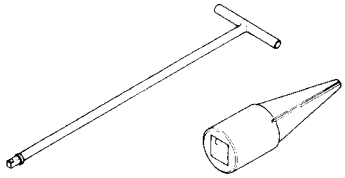
YM-01312-A	Fuel level gauge This tool is used to measure the fuel level in the float chamber.	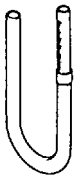
YM-33277-A	Timing light This tool is used to check the ignition timing.	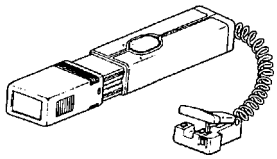
YM-03170	Belt tension gauge This tool is used to measure the drive belt slack.	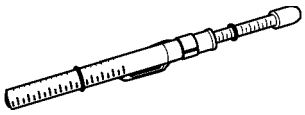
Fork seal driver weight YM-33963 Adapter YM-8020	Fork seal driver weight Adapter These tools are used to install the front fork's oil seal and dust seal.	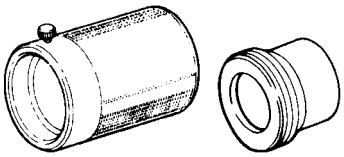
YM-34487	Dynamic spark tester This tool is used to check the ignition system components.	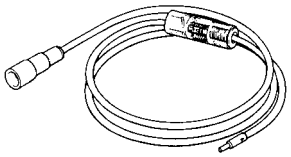
YM-04019	Valve spring compressor This tool is used to remove or install the valve assemblies.	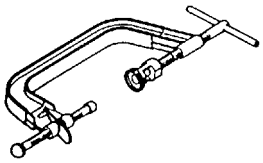

Tool No.	Tool name/Function	Illustration
YM-4064-A	Valve guide remover (6 mm) This tool is used to remove or install the valve guides.	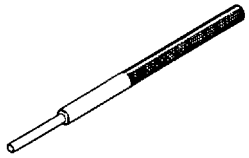
YM-4065-A	Valve guide installer This tool is used to install the valve guides.	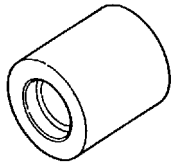
YM-4066	Valve guide reamer This tool is used to rebore the new valve guides.	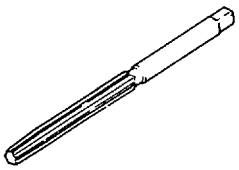
YM-91042	Universal clutch holder This tool is used to hold the clutch boss when removing or installing the clutch boss nut.	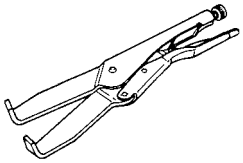
YS-01880	Sheave holder This tool is used to hold the generator rotor when removing or installing the generator rotor bolt, generator shaft bolt or pickup coil rotor bolt.	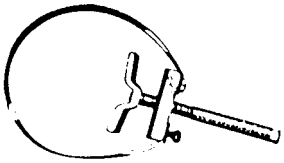
YU-01304	Piston pin puller This tool is used to remove the piston pins.	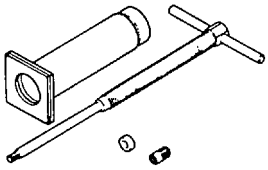
YU-03009	Micrometer (75 ~ 100 mm) This tool is used to measure the piston skirt diameter.	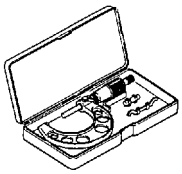
YU-03017	Cylinder bore gauge (50 ~ 100 mm) This tool is used to measure the cylinder bore.	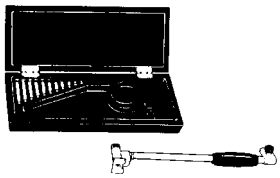
YU-03112	Pocket tester This tool is used to check the electrical system.	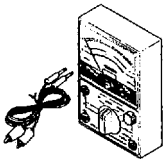

Tool No.	Tool name/Function	Illustration
Compression gauge YU-33223 Compression gauge adapter YU-33223-3	Compression gauge These tools are used to measure engine compression.	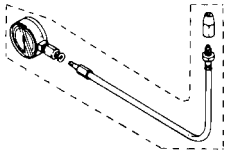
YU-33975	Steering nut wrench This tool is used to loosen or tighten the steering stem ring nuts.	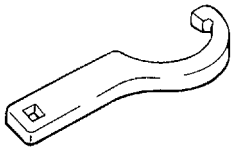
YU-38411	Oil filter wrench This tool is needed to loosen or tighten the oil filter cartridge.	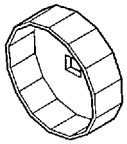
YU-8036-A	Inductive tachometer This tool is used to check engine speed.	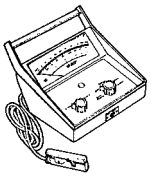
ACC-11001-05-01	Quick Gasket® This sealant is used to seal two mating surfaces (e. g., crankcase mating surfaces).	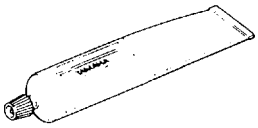
90890-03153	Oil pressure gauge This tool is used to measure the engine oil pressure.	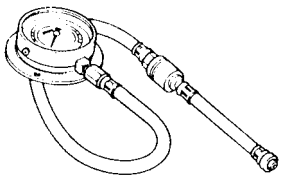

CONTENTS
SPECIFICATIONS

GENERAL SPECIFICATIONS 2-1

ENGINE SPECIFICATIONS 2-2

CHASSIS SPECIFICATIONS 2-11

ELECTRICAL SPECIFICATIONS 2-15

TIGHTENING TORQUES 2-18
- GENERAL TIGHTENING TORQUES 2-18
- ENGINE TIGHTENING TORQUES 2-19
- CHASSIS TIGHTENING TORQUES 2-21

LUBRICATION POINTS AND LUBRICANT TYPES 2-23
- ENGINE LUBRICATION POINTS AND LUBRICANT TYPES 2-23
- CHASSIS LUBRICATION POINTS AND LUBRICANT TYPES 2-24

ENGINE OIL LUBRICATION CHART 2-25

ENGINE OIL FLOW DIAGRAMS 2-26

TRANSFER GEAR OIL FLOW DIAGRAMS 2-30

CABLE ROUTING 2-32

SPECIFICATIONS

GENERAL SPECIFICATIONS

Item	Standard	Limit
Dimensions		
Overall length	2,500 mm (98.4 in)	----
Overall width	980 mm (38.6 in)	----
Overall height	1,140 mm (44.9 in): XV16A	----
	1,500 mm (59.1 in): XV16AT	----
Seat height	710 mm (28.0 in)	----
Wheelbase	1,685 mm (66.3 in)	----
Minimum ground clearance	145 mm (5.71 in)	----
Minimum turning radius	3,200 mm (126 in)	----
Weight		
Wet (with oil and a full fuel tank)	332 kg (732 lb): XV16A	----
	347 kg (765 lb): XV16AT	----
Dry (without oil and fuel)	307 kg (678 lb): XV16A	----
	322 kg (710 lb): XV16AT	----
Maximum load (total of cargo, rider, passenger, and accessories)	196 kg (432 lb): XV16A	----
	181 kg (399 lb): XV16AT	----

ENGINE SPECIFICATIONS

Item	Standard	Limit
Engine		
Engine type	Air-cooled, 4-stroke, OHV	----
Displacement	1,602 cm^3	----
Cylinder arrangement	V-type 2-cylinder	----
Bore × stroke	95 × 113 mm (3.74 × 4.45 in)	----
Compression ratio	8.3:1	----
Engine idling speed	850 ~ 950 r/min	----
Vacuum pressure at engine idling speed	52 kPa (390 mm Hg, 15.4 in Hg)	----
Standard compression pressure (at sea level)	1,200 kPa (12.0 kgf/cm^2, 171 psi) at 200 r/min	----
Fuel		
Recommended fuel	Unleaded fuel (for USA)	----
	Regular unleaded gasoline (for CDN)	----
Fuel tank capacity		
Total (including reserve)	20 L (17.6 Imp qt, 21.1 US qt)	----
Reserve only	3.5 L (3.08 Imp qt, 3.70 US qt)	----
Engine oil		
Lubrication system	Dry sump	----
Recommended oil		----
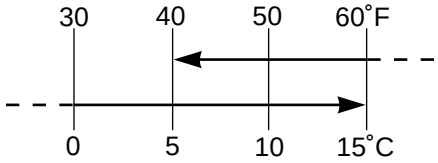	Yamalube 4 (20W40) or SAE 20W40 type SE motor oil (40˚F/5˚C or above) (Non-Friction modified)	
Quantity		
Total amount	5.0 L (4.4 Imp qt, 5.3 US qt)	----
Without oil filter cartridge replacement	3.7 L (3.3 Imp qt, 3.9 US qt)	----
With oil filter cartridge replacement	4.1 L (3.6 Imp qt, 4.3 US qt)	----
Oil pressure (hot)	60 kPa (0.6 kgf/cm^2, 8.5 psi) at 900 r/min	----
Relief valve opening pressure	0.60 MPa (6.0 kgf/cm^2, 85 psi)	----
Transfer gear oil		
Recommended oil	SAE80API "GL-4" hypoid gear oil	----
Quantity	0.4 L (0.35 Imp qt, 0.42 US qt)	----
Oil filter		
Oil filter type	Cartridge (paper)	----
Bypass valve opening pressure	80 ~ 120 kPa (0.8 ~ 1.2 kgf/cm^2, 11.3 ~ 17.1 psi)	----

Item	Standard	Limit
Engine oil pump		
Oil pump type	Trochoidal	----
Inner rotor to outer rotor tip clearance	0.00 ~ 0.12 mm (0.000 ~ 0.005 in)	0.17 mm (0.007 in)
Inner rotor outer rotor 2 to oil pump housing clearance (feed pump)	0.03 ~ 0.08 mm (0.001 ~ 0.003 in)	0.13 mm (0.005 in)
Inner rotor outer rotor 1 to oil pump housing clearance (scavenging pump)	0.06 ~ 0.11 mm (0.002 ~ 0.004 in)	0.16 mm (0.006 in)
Transfer oil pump		
Oil pump type	Trochoidal	
Inner rotor to outer rotor tip clearance	0.07 ~ 0.12 mm (0.003 ~ 0.005 in)	0.17 mm (0.007 in)
Inner rotor outer rotor to oil pump housing clearance	0.03 ~ 0.08 mm (0.001 ~ 0.003 in)	0.16 mm (0.006 in)
Starting system type	Electric starter	
Spark plugs		
Model	DPR7EA-9/X22EPR-U9	----
Manufacturer	NGK/DENSO	----
Quantity	4	----
Spark plug gap	0.8 ~ 0.9 mm (0.031 ~ 0.035 in)	----
Cylinder heads		
Max. warpage	----	0.10 mm (0.004 in)
Camshafts		
Drive system	Gear drive	----
Crankcase hole inside diameter	25.000 ~ 25.021 mm (0.9843 ~ 0.9851 in)	----
Camshaft cover hole inside diameter	28.000 ~ 28.021 mm (1.1024 ~ 1.1032 in)	----
Camshaft journal diameter (crankcase side)	24.937 ~ 24.950 mm (0.9818 ~ 0.9823 in)	----
Camshaft journal diameter (camshaft cover side)	27.967 ~ 27.980 mm (1.1011 ~ 1.1016 in)	----
Camshaft to crankcase clearance	0.050 ~ 0.084 mm (0.0020 ~ 0.0033 in)	----
Camshaft to camshaft cover clearance	0.020 ~ 0.054 mm (0.0008 ~ 0.0021 in)	----
Camshaft intake cam dimensions		

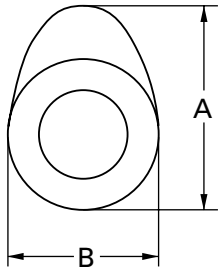

Item	Standard	Limit
Measurement A	36.594 ~ 36.649 mm (1.4407 ~ 1.4429 in)	36.494 mm (1.4368 in)
Measurement B	31.950 ~ 32.050 mm (1.2579 ~ 1.2618 in)	31.850 mm (1.2539 in)
Camshaft exhaust cam dimensions		
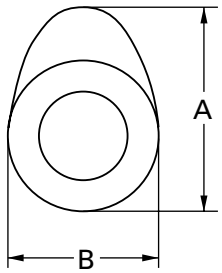		
Measurement A	36.554 ~ 36.654 mm (1.4391~ 1.4431 in)	36.454 mm (1.4352 in)
Measurement B	31.950 ~ 32.050 mm (1.2579 ~ 1.2618 in)	31.850 mm (1.2539 in)
Rocker arms, Rocker arm shafts		
Rocker arm inside diameter	15.000 ~ 15.018 mm (0.5906 ~ 0.5913 in)	15.036 mm (0.5920 in)
Rocker arm shaft outside diameter	14.981 ~ 14.991 mm (0.5898 ~ 0.5902 in)	14.97 mm (0.5894 in)
Rocker arm to rocker arm shaft clearance	0.009 ~ 0.037 mm (0.0004 ~ 0.0015 in)	0.08 mm (0.003 in)
Valves, valve seats, valve guides		
Valve clearance (cold)		
Intake	0 ~ 0.04 mm (0 ~ 0.0016 in)	----
Exhaust	0 ~ 0.04 mm (0 ~ 0.0016 in)	----
Valve dimensions		
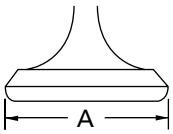 Head Diameter	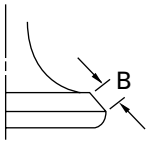 Face Width	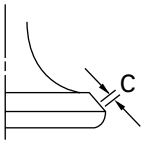 Seat Width 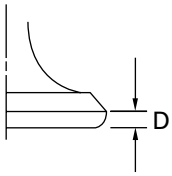 Margin Thickness
Valve head diameter A		
Intake	33.9 ~ 34.1 mm (1.3346 ~ 1.3425 in)	----
Exhaust	27.9 ~ 28.1 mm (1.0984 ~ 1.1063 in)	----
Valve face width B		
Intake	1.3 ~ 2.3 mm (0.0512 ~ 0.0906 in)	----
Exhaust	1.2 ~ 2.4 mm (0.0472 ~ 0.0945 in)	----
Valve seat width C		
Intake	0.9 ~ 1.1 mm (0.035 ~ 0.043 in)	2.0 mm (0.079 in)
Exhaust	0.9 ~ 1.1 mm (0.035 ~ 0.043 in)	2.0 mm (0.079 in)

Item	Standard	Limit
Valve margin thickness D		
Intake	0.7 ~ 1.3 mm (0.028 ~ 0.051 in)	0.4 mm (0.016 in)
Exhaust	0.7 ~ 1.3 mm (0.028 ~ 0.051 in)	0.4 mm (0.016 in)
Valve stem diameter		
Intake	5.975 ~ 5.990 mm (0.2352 ~ 0.2358 in)	5.945 mm (0.2341 in)
Exhaust	5.960 ~ 5.975 mm (0.2346 ~ 0.2352 in)	5.920 mm (0.2331 in)
Valve guide inside diameter		
Intake	6.000 ~ 6.012 mm (0.2362 ~ 0.2367 in)	6.05 mm (0.2382 in)
Exhaust	6.000 ~ 6.012 mm (0.2362 ~ 0.2367 in)	6.05 mm (0.2382 in)
Valve stem-to-valve guide clearance		
Intake	0.010 ~ 0.037 mm (0.0004 ~ 0.0015 in)	0.08 mm (0.0031 in)
Exhaust	0.025 ~ 0.052 mm (0.0010 ~ 0.0020 in)	0.1 mm (0.004 in)
Valve stem runout	----	0.01 mm (0.0004 in)
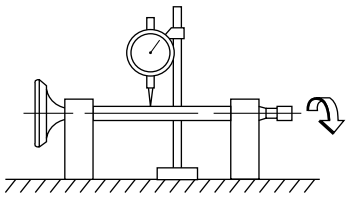		
Valve seat width		
Intake	0.9 ~ 1.1 mm (0.035 ~ 0.043 in)	----
Exhaust	0.9 ~ 1.1 mm (0.035 ~ 0.043 in)	----
Valve springs		
Inner springs		
Free length		
Intake	38.26 mm (1.51 in)	36.26 mm (1.43 in)
Exhaust	38.26 mm (1.51 in)	36.26 mm (1.43 in)
Installed length (valve closed)		
Intake	29.0 mm (1.14 in)	----
Exhaust	29.0 mm (1.14 in)	----
Compressed spring force (installed)		
Intake	63 ~ 73 N (6.3 ~ 7.3 kgf, 13.9~ 16.1 lb)	----
Exhaust	63 ~ 73 N (6.3 ~ 7.3 kgf, 13.9~ 16.1 lb)	----

Item	Standard	Limit
Spring tilt		
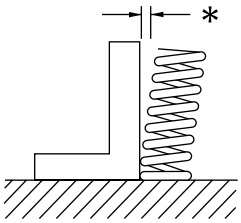		
Intake	----	2.5° /2.4 mm (2.5°/0.094 in)
Exhaust	----	2.5° /2.4 mm (2.5°/0.094 in)
Winding direction (top view)		
Intake	Counterclockwise	----
Exhaust	Counterclockwise	----
	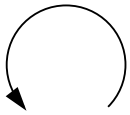	
Outer springs		
Free length		
Intake	43.25 mm (1.70 in)	41.26 mm (1.62 in)
Exhaust	43.25 mm (1.70 in)	41.26 mm (1.62 in)
Installed length (valve closed)		
Intake	31.0 mm (1.22 in)	----
Exhaust	31.0 mm (1.22 in)	----
Compressed spring force (installed)		
Intake	139 ~ 161 N (13.9 ~ 16.1 kgf, 30.6 ~ 35.5 lb)	----
Exhaust	139 ~ 161 N (13.9 ~ 16.1 kgf, 30.6 ~ 35.5 lb)	----
Spring tilt		
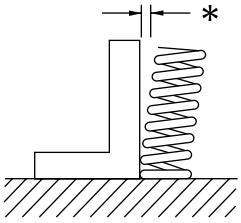		
Intake	----	2.5° /2.4 mm (2.5°/0.094 in)
Exhaust	----	2.5° /2.4 mm (2.5°/0.094 in)

Item	Standard	Limit
Winding direction (top view)		
Intake	Clockwise	----
Exhaust	Clockwise	----
Valve lifters		
Valve lifter outside diameter	22.9680 ~ 22.9744 mm (0.9043 ~ 0.9045 in)	----
Valve lifter case inside diameter	22.990 ~ 23.010 mm (0.9051 ~ 0.9059 in)	----
Valve lifter-to-valve lifter case clearance	0.0156 ~ 0.0420 mm (0.0006 ~ 0.0017 in)	----
Valve push rods		
Valve push rod length	293.45 ~ 293.95 mm (11.553 ~ 11.573 in)	----
Valve push rod runout	0.3 mm (0.012 in)	----
Cylinders		
Bore	95.000 ~ 95.010 mm (3.7402 ~ 3.7406 in)	----
Max. taper	----	0.05 mm (0.0016 in)
Max. out of round	----	0.05 mm (0.0016 in)
Pistons		
Piston-to-cylinder clearance	0.025 ~ 0.050 mm (0.001 ~ 0.002 in)	0.15 mm (0.006 in)
Diameter D	94.960 ~ 94.975 mm (3.7386 ~ 3.7392 in)	----
Height H	5 mm (0.20 in)	----
Piston pin bore (in the piston)		
Diameter	22.004 ~ 22.015 mm (0.8663 ~ 0.8667 in)	22.045 mm (0.8679 in)
Offset	1.0 mm (0.04 in)	----
Piston pins		
Outside diameter	21.991 ~ 22.000 mm (0.8658 ~ 0.8661 in)	21.971 mm (0.8650 in)
Piston pin-to-piston pin bore clearance	0.004 ~ 0.024 mm (0.00016 ~ 0.00094 in)	0.074 mm (0.0029 in)

Item	Standard	Limit
Piston rings		
Top ring		
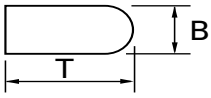		
Ring type	Barrel	----
Dimensions (B × T)	1.2 × 3.8 mm (0.047 × 0.150 in)	----
End gap (installed)	0.30 ~ 0.45 mm (0.012 ~ 0.018 in)	0.65 mm (0.026 in)
Ring side clearance	0.03 ~ 0.08 mm (0.0012 ~ 0.0031 in)	0.12 mm (0.0047 in)
2nd ring		
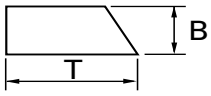		
Ring type	Taper	----
Dimensions (B × T)	1.2 × 3.8 mm (0.047 × 0.150 in)	----
End gap (installed)	0.30 ~ 0.45 mm (0.012 ~ 0.018 in)	0.8 mm (0.031 in)
Ring side clearance	0.03 ~ 0.07 mm (0.0012 ~ 0.0028 in)	0.12 mm (0.0047 in)
Oil ring		
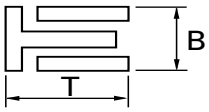		
Dimensions (B × T)	2.5 × 3.4 mm (0.098 × 0.134 in)	----
End gap (installed)	0.2 ~ 0.7 mm (0.008 ~ 0.028 in)	----
Connecting rods		
Crankshaft pin-to-big end bearing clearance	0.037 ~ 0.074 mm (0.0015 ~ 0.0029 in)	----
Bearing color code	1 = Blue, 2 = Black, 3 = Brown, 4 = Green, 5 = Yellow.	----
Connecting rod length	191.95 ~ 192.05 mm (7.557 ~ 7.561 in)	
Crankshaft		
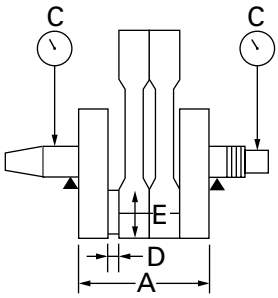		
Width A	132.8 ~ 133.2 mm (5.228 ~ 5.244 in)	----
Max. runout C		0.04 mm (0.0016 in)
Big end side clearance D	0.320 ~ 0.474 mm (0.013 ~ 0.019 in)	----

Item	Standard	Limit
Big end radial clearance E	0.037 ~ 0.074 mm (0.0015 ~ 0.0029 in)	0.09 mm (0.0035 in)
Crankshaft journal-to-crankshaft-journal bearing clearance	0.030 ~ 0.062 mm (0.0012 ~ 0.0024 in)	0.1 mm (0.0040 in)
Clutch		
Clutch type	Wet, multiple disc	----
Clutch release method	Rack and pinion (pull rod type)	----
Clutch release method operation	Cable operation	----
Operation	Left-hand operation	----
Clutch cable free play (at the end of the clutch lever)	10 ~ 15 mm (0.39 ~ 0.59 in)	----
Friction plates		
Thickness	2.9 ~ 3.1 mm (0.114 ~ 0.122 in)	2.8 mm (0.110 in)
Plate quantity	9	----
Clutch plates		
Thickness	2.2 ~ 2.4 mm (0.087 ~ 0.094 in)	----
Plate quantity	8	----
Max. warpage	----	0.2 mm (0.008 in)
Clutch springs		
Free length	7 mm (0.276 in)	----
Spring quantity	1	----
Min. length		6.5 mm (0.256 in)
Transmission		
Transmission type	Constant mesh, 5-speed	----
Primary reduction system	Spur gear	----
Primary reduction ratio	72/47 (1.532)	----
Secondary reduction system	Belt drive	----
Secondary reduction ratio	35/32 × 70/33 (2.320)	----
Operation	Left-foot operation	----
Gear ratios		
1st gear	39/16 (2.437)	----
2nd gear	30/19 (1.578)	----
3rd gear	29/25 (1.160)	----
4th gear	29/32 (0.906)	----
5th gear	21/28 (0.750)	----
Max. main axle runout	----	0.08 mm (0.003 in)
Max. drive axle runout	----	0.08 mm (0.003 in)

Item	Standard	Limit
Shifting mechanism		
Shift mechanism type	Guide bar	----
Max. shift fork guide bar bending	----	0.025 mm (0.001 in)
Shift fork thickness	6.26 ~ 6.39 mm (0.246 ~ 0.252 in)	----
Air filter type	Dry element	----
Fuel pump		
Pump type	Electrical	----
Model (manufacturer)	4WM (MITSUBISHI)	----
Output pressure	15 ~ 20 kPa (0.15 ~0.20 kgf/cm^2, 2.1 ~ 2.8 psi)	----
Carburetor		
Model (manufacturer) × quantity	BSR40 (MIKUNI) × 1	----
Throttle cable free play (at the flange of the throttle grip)	3 ~ 5 mm (0.12 ~ 0.20 in)	----
ID mark	4WM1 00	----
	4WM2 10 (for California)	----
Main jet	#165	----
Main air jet	#60	----
Jet needle	6HDC26	----
Needle jet	X-2	----
Pilot air jet	#100	----
Pilot outlet	1.0 (XV16A), 1.1 (XV16AT)	----
Pilot jet	#35	----
Bypass 1	0.9	----
Bypass 2	1.0	----
Bypass 3	0.9	----
Pilot screw turns out	2-1/2	----
Valve seat size	2.0	----
Starter jet 1	#57.5	----
Starter jet 2	1.0	----
Butterfly valve size	#110	----
Fuel level (below the float chamber mating surface)	2.0 ~ 3.0 mm (0.079 ~ 0.12 in)	----

CHASSIS SPECIFICATIONS

Item	Standard	Limit
Frame		
Frame type	Double cradle	----
Caster angle	32°	----
Trail	142 mm (5.59 in)	----
Front wheel		
Wheel type	Spoke wheel	----
Rim		
Size	16 × MT3.00	----
Material	Steel	----
Wheel travel	140 mm (5.51 in)	----
Wheel runout		
Max. radial wheel runout	----	1 mm (0.04 in)
Max. lateral wheel runout	----	0.5 mm (0.02 in)
Rear wheel		
Wheel type	Spoke wheel	----
Rim		
Size	16 × MT3.50	----
Material	Steel	----
Wheel travel	110 mm (4.33 in)	----
Wheel runout		
Max. radial wheel runout	----	1 mm (0.04 in)
Max. lateral wheel runout	----	0.5 mm (0.02 in)
Front tire		
Tire type	With tube	----
Size	130/90 - 16 67H	----
Model (manufacturer)	D404FL (DUNLOP)/ G703F (BRIDGESTONE)	----
Tire pressure (cold)		
0 ~ 90 kg (0 ~ 198 lb)	250 kPa (2.5 kg/cm^2, 36 psi)	----
90 kg (198 lb) ~ Maximum load*	250 kPa (2.5 kg/cm^2, 36 psi)	----
High-speed riding	250 kPa (2.5 kg/cm^2, 36 psi)	----
	* Load is the total weight of the cargo, rider, passenger and accessories.	
Min. tire tread depth	----	1.6 mm (0.06 in)

Item	Standard	Limit
Rear tire		
Tire type	With tube	----
Size	150/80 B16 71H	----
Model (manufacturer)	D404 (DUNLOP)/ G702 (BRIDGESTONE)	----
Tire pressure (cold)		
0 ~ 90 kg (0 ~ 198 lb)	250 kPa (2.5 kg/cm^2, 36 psi)	----
90 kg (198 lb) ~ Maximum load*	280 kPa (2.8 kg/cm^2, 40 psi)	----
High-speed riding	280 kPa (2.8 kg/cm^2, 40 psi)	----
	* Load is the total weight of the cargo, rider, passenger and accessories.	
Min. tire tread depth	----	1.6 mm (0.06 in)
Front brakes		
Brake type	Dual-disc brake	----
Operation	Right-hand operation	----
Brake lever free play (lever end)	2 ~ 5 mm (0.08 ~ 0.20 in)	----
Recommended fluid	DOT 4	----
Brake discs		
Diameter × thickness	298 × 5 mm (11.7 × 0.20 in)	----
Min. thickness	----	4.5 mm (0.18 in)
Max. deflection	----	0.1 mm (0.004 in)
Brake pad lining thickness	6.0 mm (0.24 in)	0.5 mm (0.02 in)
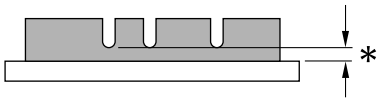		
Master cylinder inside diameter	15.8 mm (0.62 in)	----
Caliper cylinder inside diameter	30.1 mm (1.19 in) and 33.3 mm (1.31 in)	----
Rear brake		
Brake type	Single-disc brake	----
Operation	Right-foot operation	----
Brake pedal position (from the top of the brake pedal to the bottom of the rider footrest board)	100 mm (3.9 in)	----
Recommended fluid	DOT 4	----
Brake discs		
Diameter × thickness	320 × 7 mm (12.6 × 0.28 in)	----
Min. thickness	----	6.5 mm (0.26 in)
Max. deflection	----	0.1 mm (0.004 in)
Brake pad lining thickness	7.5 mm (0.30 in)	0.5 mm (0.02 in)
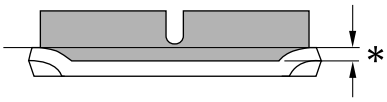		

Item	Standard	Limit
Master cylinder inside diameter	12.7 mm (0.5 in)	----
Caliper cylinder inside diameter	33.9 mm (1.33 in) and 30.2 mm (1.19 in)	----
Steering		
Steering bearing type	Taper roller bearings	----
Front suspension		
Suspension type	Telescopic fork	----
Front fork type	Coil spring/oil damper	----
Front fork travel	140 mm (5.51 in)	----
Spring		
Free length	571 mm (22.5 in)	566 mm (22.3 in)
Spring rate (K1)	6.8 N/mm (0.7 kgf/mm, 39.2 lb/in)	
Spring stroke (K1)	0 ~ 140 mm (0 ~ 5.51 in)	----
Optional spring available	No	----
Fork oil		
Recommended oil	Yamaha fork oil 5WT	----
Quantity (each front fork leg)	554 cm^3 (19.5 Imp oz, 18.7 US oz)	----
Level (from the top of the inner tube, with the inner tube fully compressed, and without the fork spring)	110 mm (4.33 in)	----
Inner tube outer diameter	43 mm (1.69 in)	----
Rear suspension		
Suspension type	Swingarm (link suspension)	----
Rear shock absorber assembly type	Coil spring/gas-oil damper	----
Rear shock absorber assembly travel	50 mm (1.97 in)	----
Spring		
Free length	187 mm (7.36 in)	182 mm (7.17 in)
Installed length	172 mm (6.77 in): XV16A 169 mm (6.65 in): XV16AT	----
Spring rate (K1)	127 N/mm (13 kgf/mm, 728 lb/in)	----
Spring stroke (K1)	0 ~ 50 mm (0 ~ 1.97 in)	----
Optional spring available	No	----
Standard spring preload gas/air pressure	1,000 kPa (10 kgf/cm^2, 142 psi)	----
Swingarm		
Free play (at the end of the swingarm)		
Radial	----	1 mm (0.04 in)
Axial	----	1 mm (0.04 in)

Item	Standard	Limit
Drive belt		
Model (manufacturer)	UBD-0568	----
Drive belt slack (on a sidestand)	7.5 ~ 13 mm (0.30 ~ 0.51 in)	----
Drive belt slack (on a suitable stand)	14 ~ 21 mm (0.55 ~ 0.83 in)	----

ELECTRICAL SPECIFICATIONS

Item	Standard	Limit
System voltage	12 V	----
Ignition system		
Ignition system type	Transistorized coil ignition (TCI)	----
Ignition timing	10˚ BTDC at 1,000 r/min	----
Advanced timing	40˚ BTDC at 4,000 r/min	----
Advancer type	Throttle position sensor and electrical	----
Pickup coil resistance/color	248 ~ 372 Ω / Gy–B	----
Transistorized coil ignition unit model (manufacturer)	J4T098 (MITSUBISHI)	---- ----
Ignition coils		
Model (manufacturer)	J0383 (DENSO)	----
Minimum ignition spark gap	6 mm (0.24 in)	----
Primary coil resistance	1.53 ~ 2.07 Ω	----
Secondary coil resistance	12 ~ 18 kΩ	----
Spark plug caps		
Material	Resin	----
Resistance	10 kΩ	----
Throttle position sensor standard resistance	4.0 ~ 6.0 kΩ	----
Charging system		
System type	AC magneto	----
Model (manufacturer)	F4T363 (MITSUBISHI)	----
Nominal output	14 V / 21 A at 5,000 r/min	----
Stator coil resistance	0.45 ~ 0.55 Ω at 20˚C (68˚F)	----
Voltage regulator		
Regulator type	Semiconductor, short circuit	----
Model	SH650D-11	----
No-load regulated voltage	14.1 ~ 14.9 V	----
Rectifier		
Model	SH650D-11	----
Rectifier capacity	18 A	----
Withstand voltage	200 V	----
Battery		
Battery type	YTX20L-BS	----
Battery voltage/capacity	12V / 18AH	----
Headlight type	Halogen bulb	
Indicator light type × quantity	Bulb × 3 and LED × 2	
Bulbs (voltage/wattage × quantity)		
Headlight	12 V 60 W / 55 W × 1	----
Tail/brake light	12 V 8 W / 27 W × 1	----
Front turn signal/position light	12 V 27 W / 8 W × 2	----
Rear turn signal light	12 V 27 W × 2	----
Meter light	14 V 1.7 W × 3	----

Item	Standard	Limit
Neutral indicator light	12 V 1.7 W × 1	
Turn signal indicator light	12 V 1.7 W × 1	
High beam indicator light	12 V 1.7 W × 1	
Fuel level indicator light	LED	
Engine trouble indicator light	LED	
Electric starting system		
System type	Constant mesh	----
Starter motor		
Model (manufacturer)	SM-13 (MITSUBA)	----
Power output	0.8 kW	----
Brushes		
Overall length	10 mm (0.40 in)	5 mm (0.20 in)
Spring force	7.65 ~ 10.01 N (765 ~ 1,001 gf, 27.0 ~ 35.3 oz)	----
Commutator resistance	25 ~ 35 mΩ	----
Commutator diameter	28 mm (1.10 in)	27 mm (1.06 in)
Mica undercut	0.7 mm (0.03 in)	----
Starter relay		
Model (manufacturer)	MS5F-411 (JIDECO)	----
Amperage	100 A	----
Coil resistance	4.18 ~ 4.62 Ω	----
Horn		
Horn type	Eddy	----
Model (manufacturer) × quantity	YP-12 (NIKKO) × 2	----
Max. amperage	2 A	----
Turn signal relay		
Relay type	Semi-transistor	----
Model (manufacturer)	FB257H (DENSO)	----
Self-cancelling device built-in	Yes	----
Turn signal blinking frequency	75 ~ 95 cycles/min.	----
Wattage	27 W × 2 + 3.4 W, 21 (23) W × 2 + 3.4 W	----
Fuel sender		
Model (manufacturer)	4WM (NIPPON SEIKI)	----
Resistance	13 ~ 140 Ω at 20 °C (68 °F)	----
Sidestand relay		
Model (manufacturer)	G8R-30Y-B (OMRON)	----
Coil resistance	202 ~ 248 Ω	----
Diode	Yes	----
Fuel pump maximum amperage	1 A	----
Fuel pump relay model (manufacturer)	G8R-30Y-B (OMRON)	----
Thermo switch model (manufacturer)	4TR (NIPPON TEXISAS INSTALLMENTS)	----

Item	Standard	Limit
Fuses (amperage × quantity)		
Main fuse	30 A × 1	----
Headlight fuse	15 A × 1	----
Signaling system fuse	10 A × 1	----
Ignition fuse	15 A × 1	----
Carburetor heater fuse	10 A × 1	----
Backup fuse (odometer)	5 A × 1	
Reserve fuse	30 A, 15 A, 10 A, 5 A × 1	----

TIGHTENING TORQUES

GENERAL TIGHTENING TORQUES

This chart specifies tightening torques for standard fasteners with a standard ISO thread pitch. Tightening torque specifications for special components or assemblies are provided for each chapter of this manual. To avoid warpage, tighten multi-fastener assemblies in a crisscross pattern and progressive stages until the specified tightening torque is reached. Unless otherwise specified, tightening torque specifications require clean, dry threads. Components should be at room temperature.

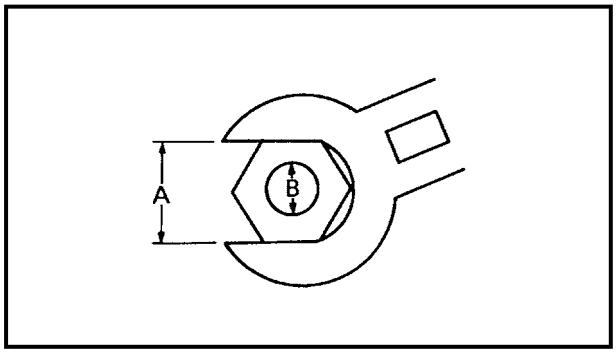

A: Width across flats
B: Thread diameter

A (nut)	B (bolt)	General tightening torques		
		Nm	m•kg	ft•lb
10 mm	6 mm	6	0.6	4.3
12 mm	8 mm	15	1.5	11
14 mm	10 mm	30	3.0	22
17 mm	12 mm	55	5.5	40
19 mm	14 mm	85	8.5	61
22 mm	16 mm	130	13.0	94

ENGINE TIGHTENING TORQUES

Item	Fastener	Thread size	Q'ty	Tightening torque			Remarks
				Nm	m·kgf	ft·lb	
Spark plug	–	M12	4	18	1.8	13	
Cylinder head	Nut	M12	8	50	5.0	36	
Cylinder head	Nut	M10	4	39	3.9	28	
Cylinder head (exhaust pipe)	Stud bolt	M8	4	15	1.5	11	
Camshaft driven gear	Nut	M14	1	52	5.2	37	
Camshaft drive gear	Bolt	M10	1	30	3.0	22	
Connecting rod	Bolt	M8	4	38.5	3.85	28	M
Rocker arm adjusting screw	Nut	M7	4	20	2.0	14	
Front cylinder camshaft end cover	Bolt	M5	2	10	1.0	7.2	LT
Engine oil drain bolt (crankcase)	–	M14	1	43	4.3	31	
Engine oil drain bolt (oil tank)	–	M14	1	43	4.3	31	
Oil filter cartridge	–	M20	1	17	1.7	12	
Oil filter bolt	–	M20	1	70	7.0	50	
Oil filter bracket	Bolt	M6	4	10	1.0	7.2	LT
Oil delivery pipe (generator cover-to-crankcase)	Nut	M20	1	40	4.0	29	
Joint bolt	–	M16	1	40	4.0	29	
Oil delivery pipe (cylinder head-to-crankcase)	Union bolt	M10	2	21	2.1	15	
Oil delivery pipe (cylinder head-to-crankcase)	Union bolt	M8	1	18	1.8	13	
Carburetor joint	Bolt	M6	4	12	1.2	8.7	
Carburetor joint clamp	Screw	M4	1	3	0.3	2.2	
Air filter case	Bolt	M6	3	7	0.7	5.1	
Air filter case clamp	Screw	M4	1	3	0.3	2.2	
Exhaust pipe	Nut	M6	4	20	2.0	14	
Muffler	Bolt	M10	2	25	2.5	18	
Muffler clamp	Bolt	M10	2	30	3.0	22	
Crankcase (cylinder head)	Stud bolt	M12	8	–	–	–	E *1
Crankcase (cylinder head)	Stud bolt	M10	4	–	–	–	E *1
Crankcase (transfer gear case)	Stud bolt	M8	1	13	1.3	9.4	E *2
Pickup coil	Screw	M6	2	7	0.7	5.1	LT
Pickup coil lead holder	Screw	M6	7	7	0.7	5.1	LT
Stator coil assembly	Screw	M6	3	7	0.7	5.1	LT
Stator coil assembly lead holder	Bolt	M6	1	7	0.7	5.1	
Starter clutch	Bolt	M8	6	24	2.4	17	LT

Item	Fastener	Thread size	Q'ty	Tightening torque			Remarks
				Nm	m·kgf	ft·lb	
Generator rotor	Bolt	M12	1	160	16.0	115	
Generator shaft	Bolt	M8	1	28	2.8	20	LT
Pickup coil rotor	Bolt	M12	1	115	11.5	85	LT
Baffle plate	Bolt	M6	4	10	1.0	7.2	LT
Clutch boss	Nut	M20	1	70	7.0	50	Use a lock washer.
Clutch spring plate	Bolt	M6	6	8	0.8	5.8	
Pull lever	Bolt	M6	1	10	1.0	7.2	
Transfer gear oil drain bolt	–	M8	1	18	1.8	13	
Middle drive gear	Nut	M22	1	85	8.5	61	Use a lock washer.
Transfer gear case	Bolt	M8	4	30	3.0	22	
Transfer gear case	Nut	M8	1	30	3.0	22	
Transfer gear oil checking bolt	–	M6	1	8	0.8	5.8	
Transfer gear oil pump cover	Screw	M6	2	7	0.7	5.1	LT
Transfer gear oil pump	Bolt	M6	5	10	1.0	7.2	LT
Drive pulley case	Bolt	M8	7	30	3.0	22	
Drive pulley	Nut	M22	1	85	8.5	61	Use a lock washer.
Drive pulley cover bracket	Bolt	M8	2	30	3.0	22	
Shift arm	Bolt	M6	1	10	1.0	7.2	
Shift rod locknut	–	M8	2	12	1.2	8.7	
Shift shaft spring stopper	Bolt	M8	1	22	2.2	16	LT
Stopper lever	Bolt	M6	1	10	1.0	7.2	LT
Neutral switch	Screw	M6	2	7	0.7	5.1	

NOTE:

*1: When installing the crankcase stud bolts (cylinder head), make sure that their installed length is 140.5 ~ 142.5 mm (5.53 ~ 5.61 in).

*2: When installing the crankcase stud bolts (transfer gear case), make sure that their installed length is 68.3 ~ 70.3 mm (2.69 ~ 2.77 in).

CHASSIS TIGHTENING TORQUES

Item	Thread size	Tightening torque			Remarks
		Nm	m·kgf	ft·lb	
Upper bracket and inner tube	M6	10	1.0	7.2	
Upper bracket and steering shaft	M22	130	13.0	94	
Handlebar holder (lower) and handlebar holder (upper)	M8	23	2.3	17	
Ring nut (steering shaft)	M25	3	0.3	2.2	See NOTE.
Brake hose joint and lower bracket	M6	7	0.7	5.1	
Front brake master cylinder cap	M4	2	0.2	1.4	
Handlebar holder (lower)	M12	40	4.0	29	
Front brake master cylinder	M6	10	1.0	7.2	
Union bolt (brake hose)	M10	30	3.0	22	
Engine mounting:					
Mounting bolt (cylinder head and engine stay)	M10	48	4.8	35	
Mounting bolt (crankcase and engine stay)	M12	88	8.8	64	
Mounting bolt (crankcase and frame)	M12	88	8.8	64	
Engine stay and frame	M10	48	4.8	35	
Transfer gear case stay and frame	M8	30	3.0	22	
Muffler stay and frame	M8	26	2.6	19	
Muffler stay and muffler	M10	30	3.0	22	
Ignition coil	M6	7	0.7	5.1	
Swingarm pivot shaft	M18	125	12.5	90	
Relay arm and swingarm	M12	59	5.9	43	
Relay arm and connecting rod	M12	59	5.9	43	
Relay arm and rear shock absorber	M10	40	4.0	29	
Rear shock absorber, connecting rod and frame	M12	59	5.9	43	
Drive belt case (upper) and swingarm	M6	10	1.0	7.2	
Drive belt case (lower) and swingarm	M6	7	0.7	5.1	
Mud guard and swingarm	M6	7	0.7	5.1	
Fuel petcock and fuel tank	M6	7	0.7	5.1	
Fuel sender and fuel tank	M6	7	0.7	5.1	
Fuel tank (rear) and frame	M6	7	0.7	5.1	
Meter cover and fuel tank	M6	7	0.7	5.1	
Side cover and frame	M6	7	0.7	5.1	
Starter relay and battery positive lead	M6	7	0.7	5.1	
Starter relay and starter motor lead	M6	7	0.7	5.1	
Rear fender side mold and rear fender stay	M8	30	3.0	22	
Sidestand bolt and nut	M10	48	4.8	35	
Footrest bracket and frame	M10	48	4.8	35	
Rear footrest and frame	M8	23	2.3	17	

Item	Thread size	Tightening torque			Remarks
		Nm	m·kgf	ft·lb	
Rear master cylinder and rear brake bracket	M8	23	2.3	17	
Rear brake reservoir tank	M6	4	0.4	2.9	
Union bolt (rear brake hose)	M10	30	3.0	22	
Footrest bracket and rear brake bracket	M8	16	1.6	11	
Footrest bracket and shift rod bracket	M8	16	1.6	11	
Front wheel axle	M18	78	7.8	56	
Front wheel axle pinch bolt	M8	19	1.9	13	
Rear wheel axle nut	M18	150	15.0	110	
Front brake caliper	M10	40	4.0	29	
Rear brake caliper	M10	40	4.0	29	
Brake disc and wheel	M8	23	2.3	17	LT
Caliper bleed screw	M8	6	0.6	4.3	
Driven pulley and rear wheel clutch hub	M12	95	9.5	68	
Rear brake caliper bracket and swingarm	M10	48	4.8	35	

NOTE:

1. First, tighten the ring nut to approximately 52 Nm (5.2 m • kg, 37 ft • lb) with a torque wrench, then loosen the ring nut completely.
2. Retighten the ring nut to specification.

LUBRICATION POINTS AND LUBRICANT TYPES

ENGINE LUBRICATION POINTS AND LUBRICANT TYPES

Lubrication point	Lubricant
Oil seal lips	LS
O-rings	LS
Bearings	E
Connecting rod bolts and nuts	M
Connecting rod small end and big end	E
Crankshaft pins	E
Crankshaft journals	E
Piston surfaces	E
Piston pins	E
Camshaft cam lobes and camshaft journals	M
Valve push rods	E
Valve push rod end balls	E
Valve stems (intake and exhaust)	M
Valve stem ends (intake and exhaust)	E
Valve lifters	E
Oil pump rotors (inner and outer) and oil pump housing	E
Oil strainer	E
Starter clutch idle gear inner surface	E
Starter clutch idle gear shaft	E
Starter clutch roller and starter clutch gear outer surface	E
Clutch pull rod	M
Pressure plate bearing	E
Transmission gears (wheel and pinion)	M
Shift drum	E
Shift forks and shift fork guide bars	E
Shift shaft	LS
Shift pedal	LS
Shift lever joint	LS
Crankcase mating surface	Sealant (Quick Gasket®)
Stator coil lead grommet	Sealant (Quick Gasket®)
Pickup coil lead grommet	Sealant (Quick Gasket®)

CHASSIS LUBRICATION POINTS AND LUBRICANT TYPES

Lubrication point	Lubricant
Steering bearings and bearing races (upper and lower)	LS
Steering bearing cover	LS
Steering head pipe lower oil seal	LS
Front wheel oil seal (right and left)	LS
Rear wheel oil seal	LS
Rear wheel drive hub mating surface	LS
Rear brake pedal shaft	LS
Shift pedal	LS
Front footrest pivot	LS
Sidestand sliding surface	LS
Tube guide (throttle grip) inner surface	LS
Brake lever pivot bolt, contact surface	LS
Clutch lever pivot bolt, contact surface	LS
Swingarm pivot shaft	M
Swingarm pivot bearing	M
Swingarm pivot oil seal	M
Relay arm bearing (inner)	M
Rear shock absorber bearing (inner)	M
Connecting rod bearing (inner)	M

ENGINE OIL LUBRICATION CHART

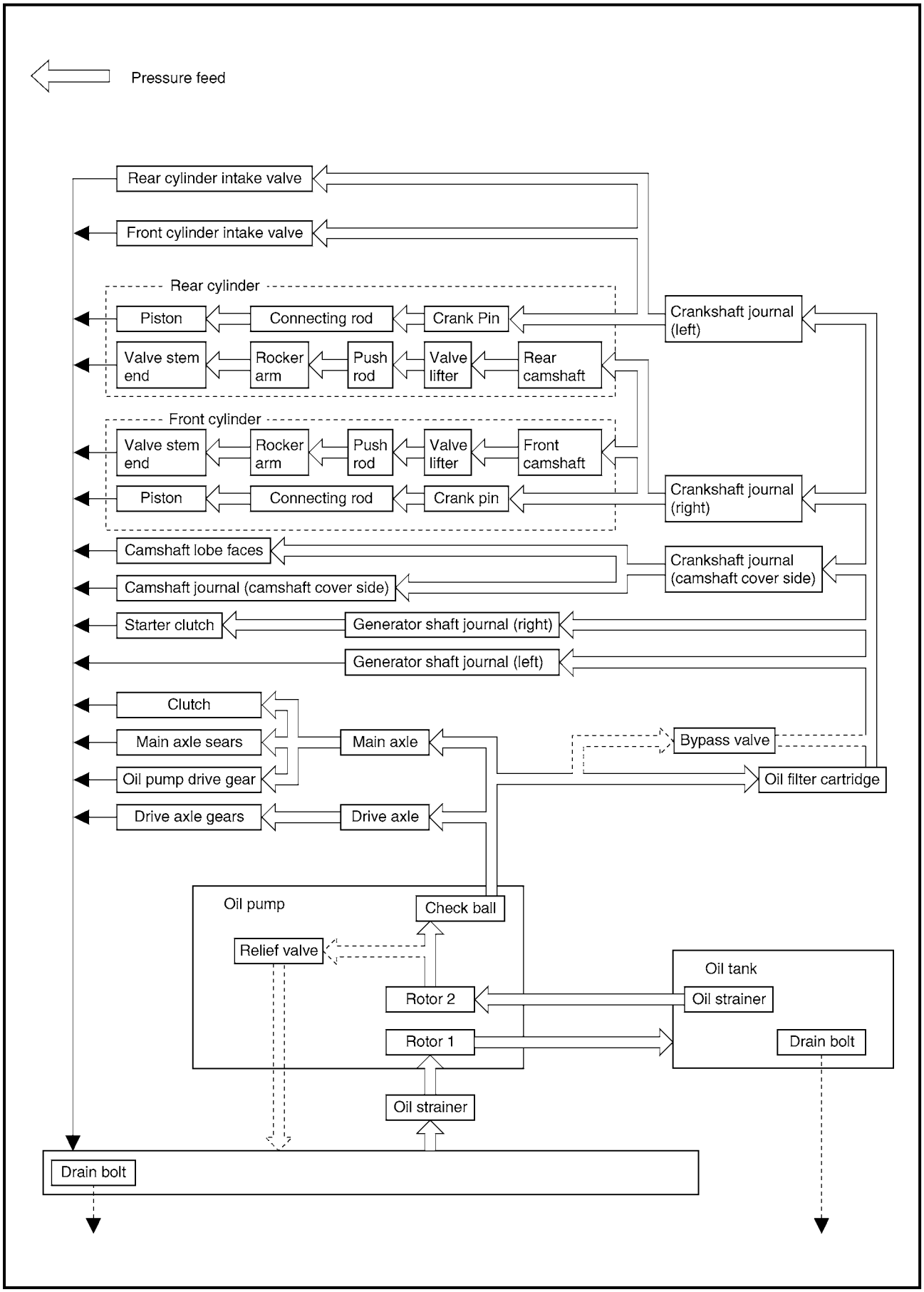

ENGINE OIL FLOW DIAGRAMS

① Oil tank
② Oil strainer
③ Dipstick
④ Oil delivery pipe
⑤ Push rod
⑥ Oil filter cartridge
⑦ Engine oil drain bolt (oil tank)

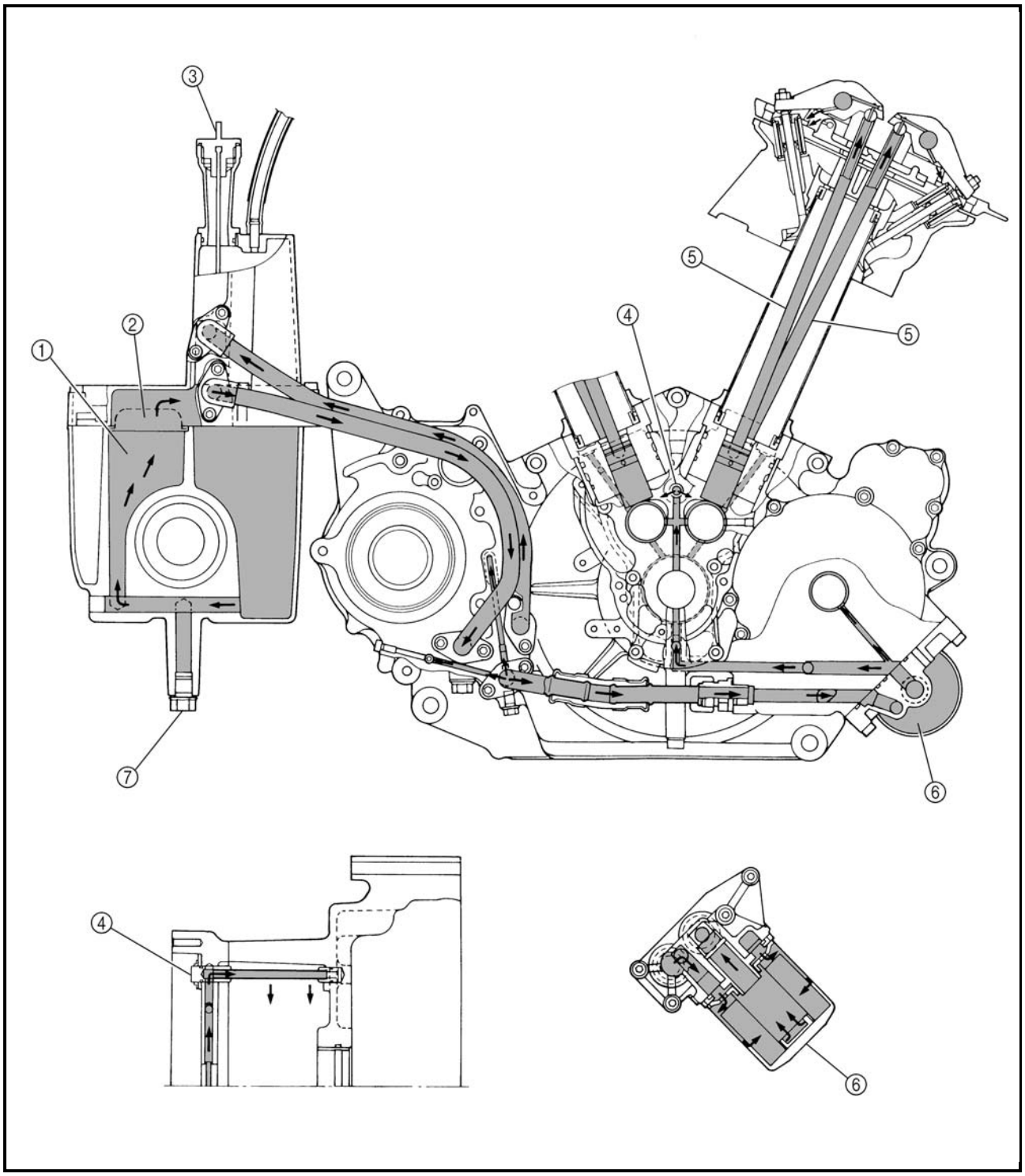

① Valve lifter
② Push rod
③ Rocker arm shaft
④ Crankshaft

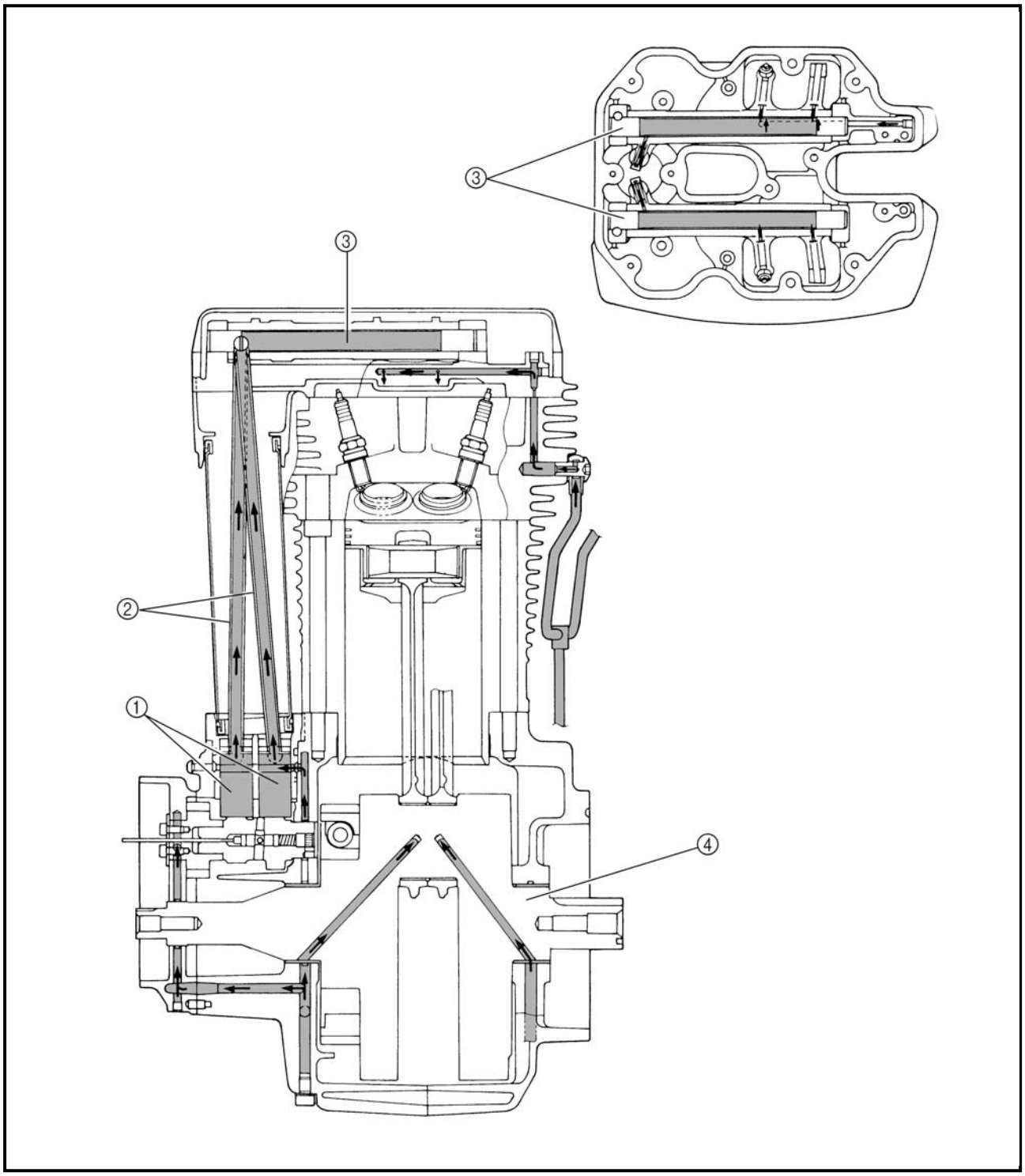

① Engine oil pump
② Oil strainer
③ Engine oil drain bolt (engine)

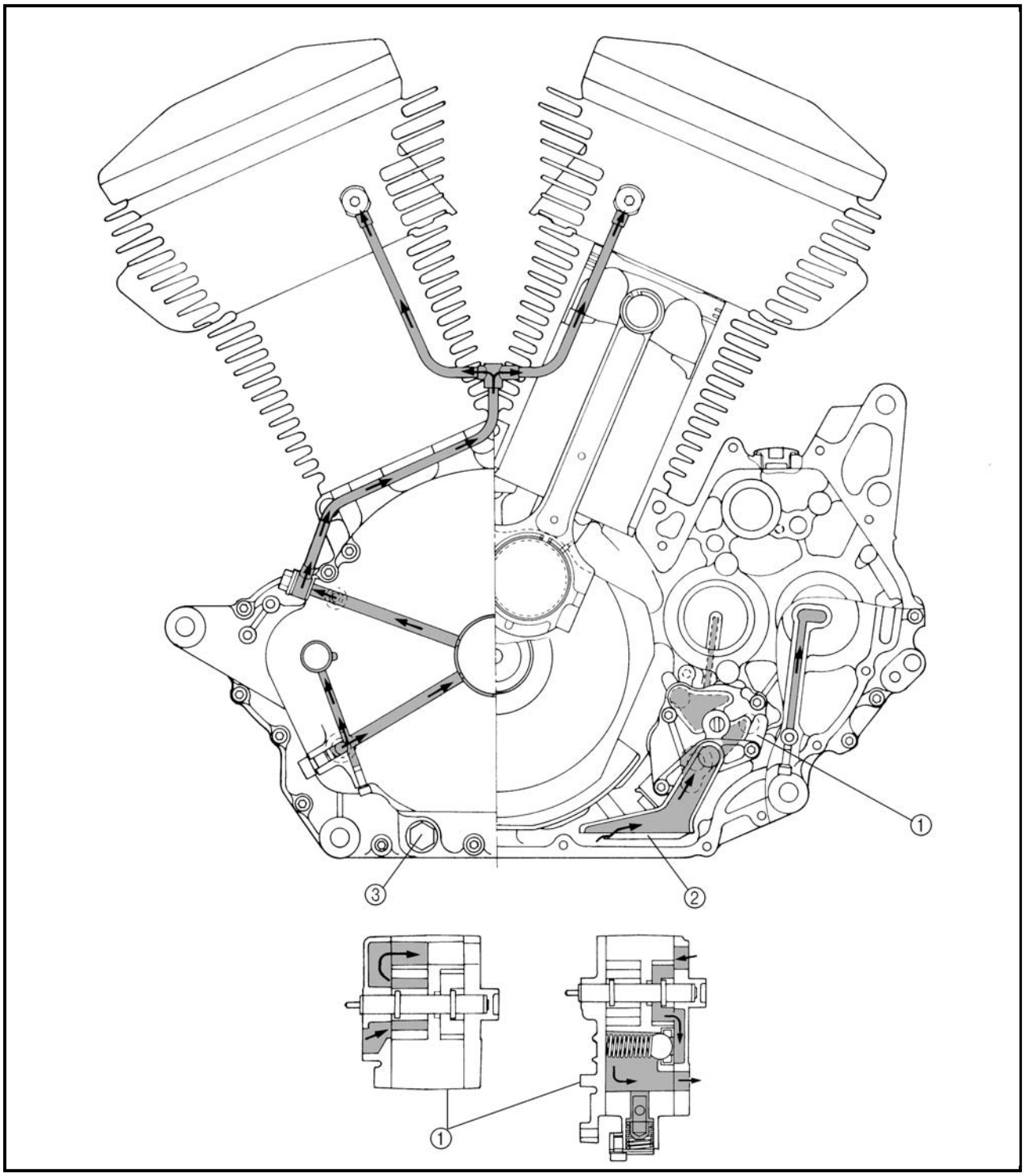

① Main axle
② Drive axle
③ Engine oil pump
④ Oil strainer

A To oil tank
B From oil tank
C To oil filter cartridge

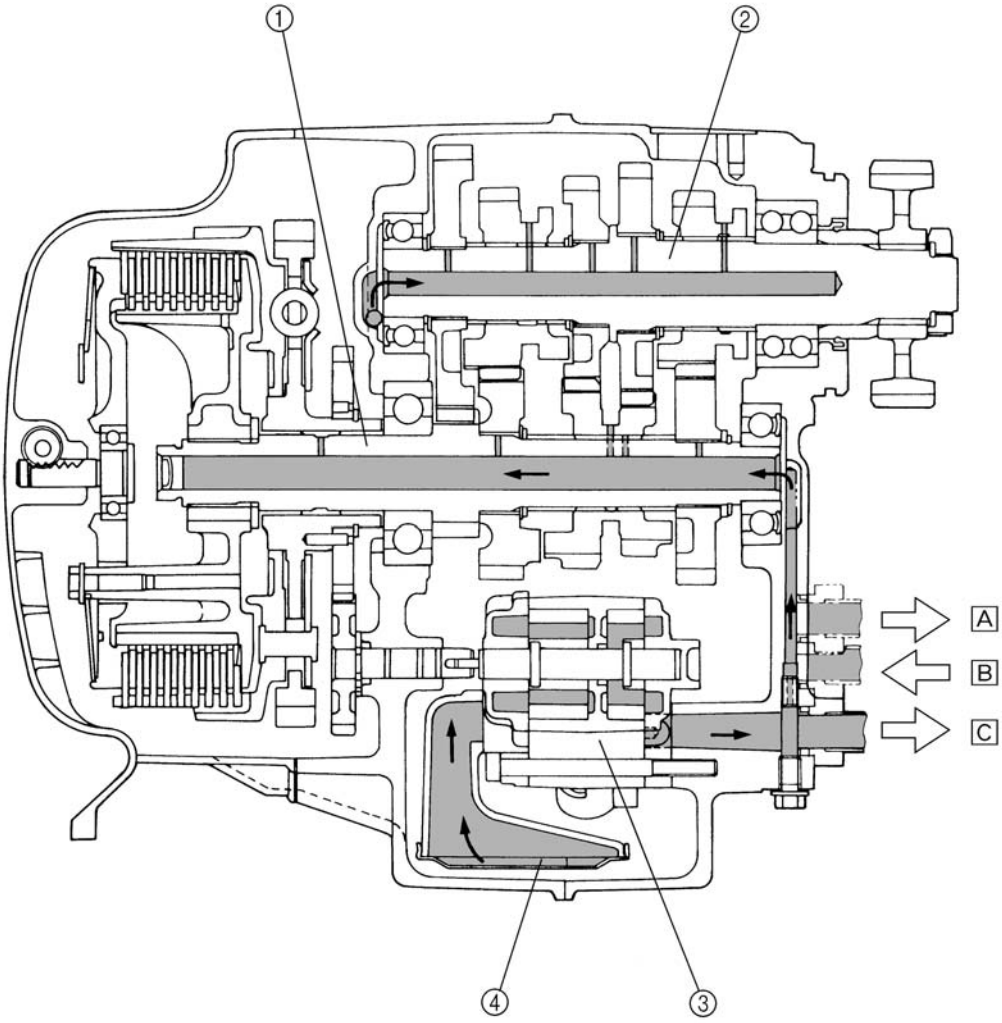

TRANSFER GEAR OIL FLOW DIAGRAMS

① Middle driven shaft
② Transfer gear oil pump

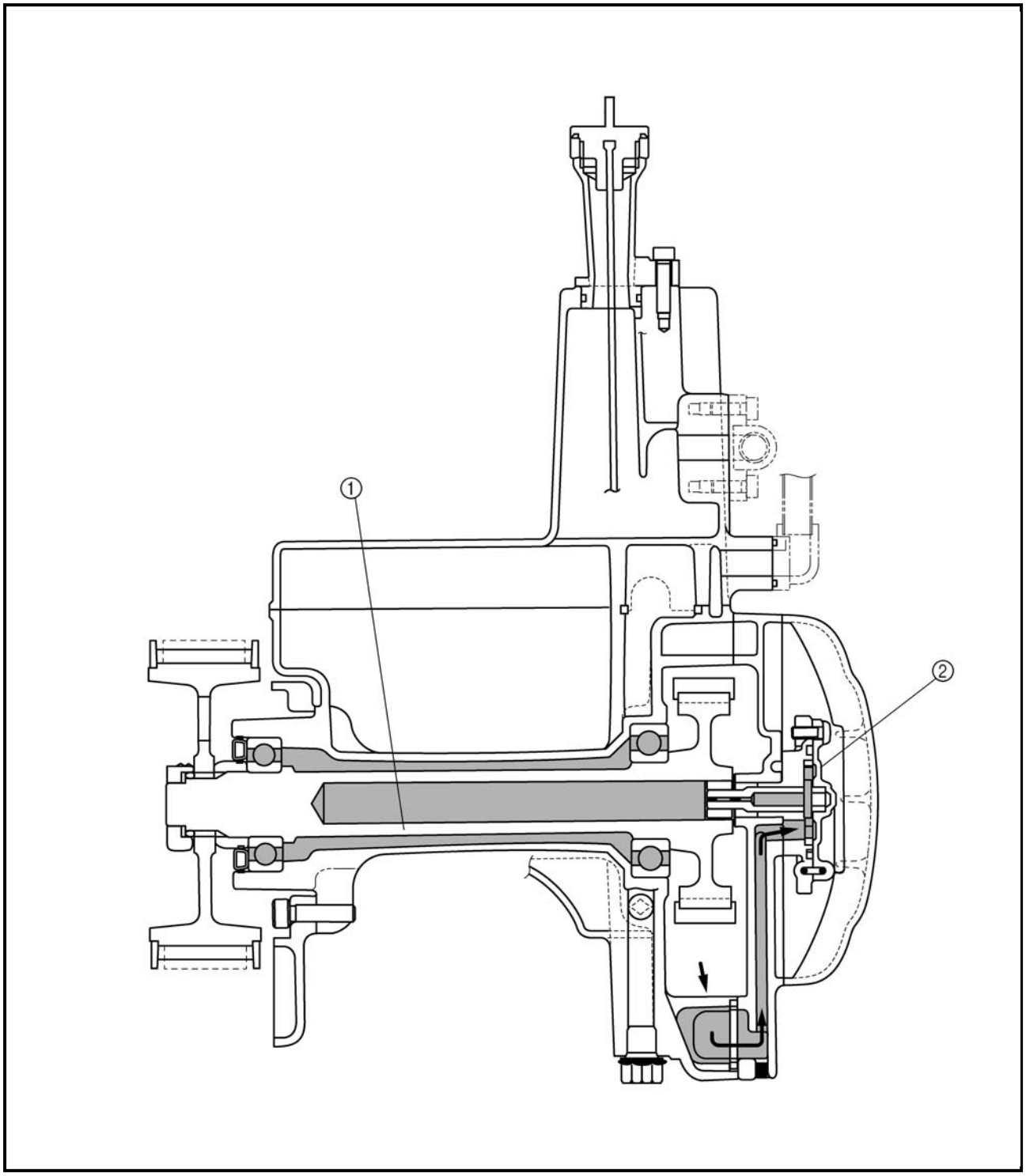

① Transfer gear oil pump
② Middle driven shaft

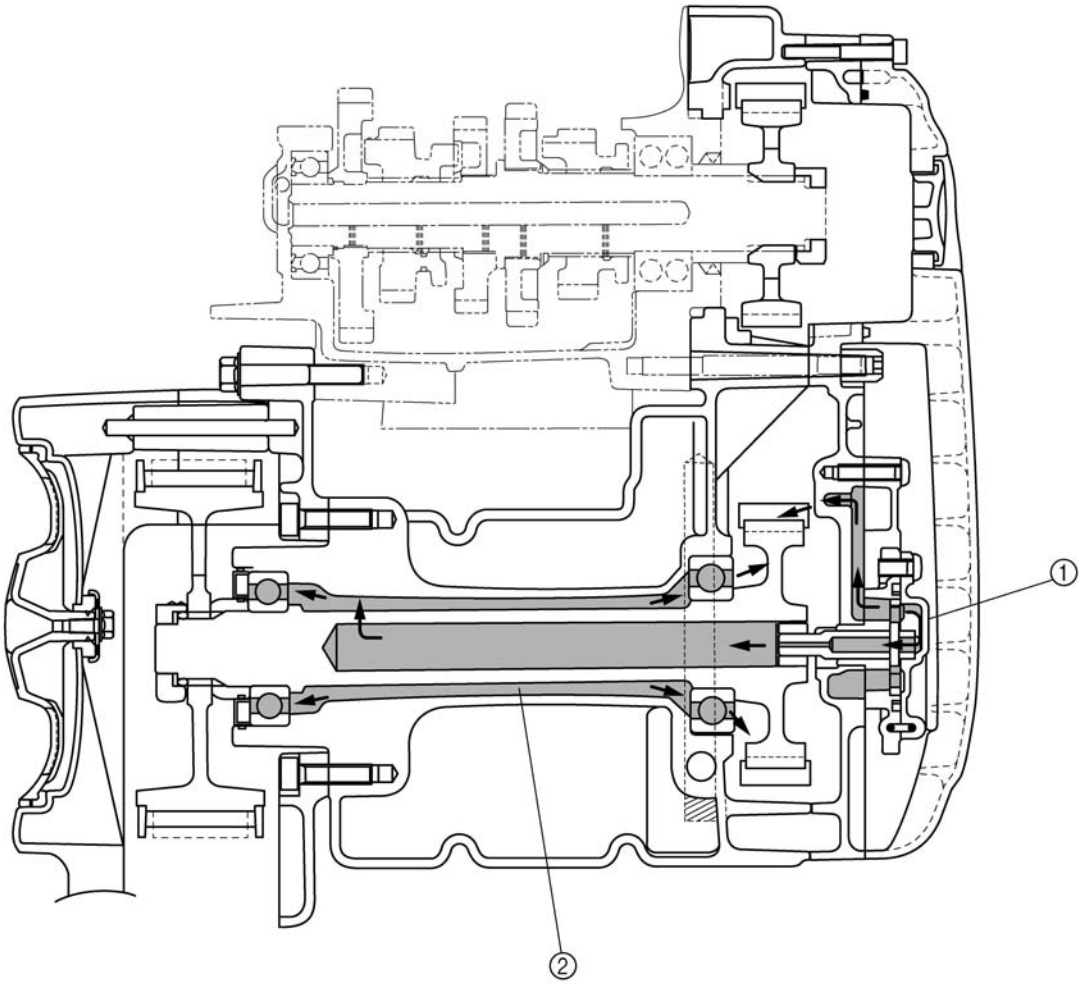

EB206000

CABLE ROUTING

① Throttle cables
② Brake hose
③ Clutch cable
④ Left handlebar switch lead
⑤ Vacuum hose (air induction system)
⑥ Rear brake light switch lead
⑦ Rectifier/regulator

[A] Route the rear brake light switch lead in front of the rectifier/regulator bracket on the frame.

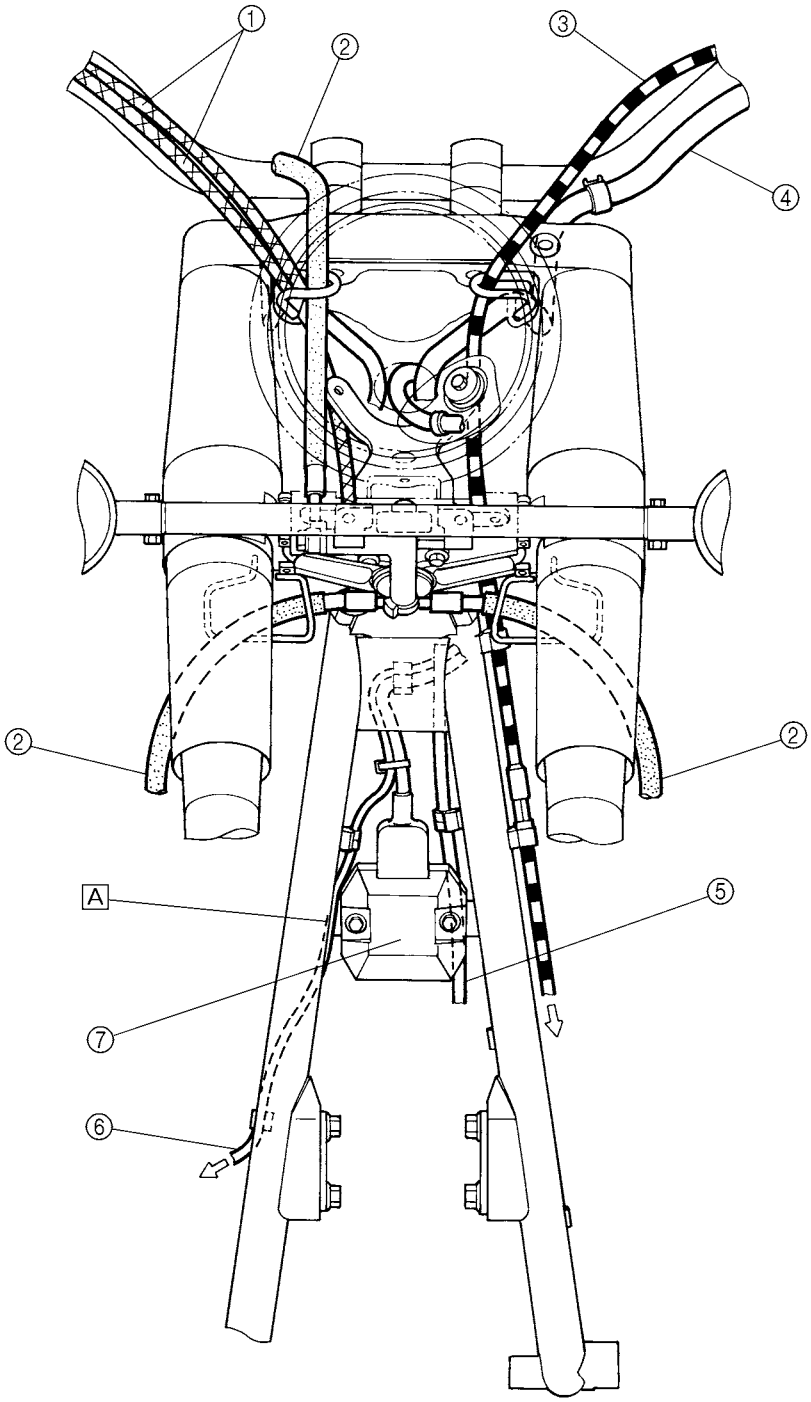

① Spark plug cap #3
② Ignition coil (rear cylinder)
③ Spark plug cap #1
④ Fuse box
⑤ Starter relay
⑥ Thermo switch
⑦ Fuel tank breather hose
⑧ Horns
⑨ Fuel pump
⑩ Starter motor lead
⑪ Fuel pump lead
⑫ Carburetor heater lead
⑬ Throttle position sensor lead
⑭ Horn lead
⑮ Sidestand switch lead
⑯ Sidestand switch

A Fasten the wire harness, fuel sender lead (wire harness side) and seat lock cable with a plastic locking tie.
B To the speed sensor, neutral switch, stator coil and decompression solenoid.
C Fasten the throttle position sensor lead, carburetor heater lead and fuel pump lead with a plastic locking tie to the engine bracket.

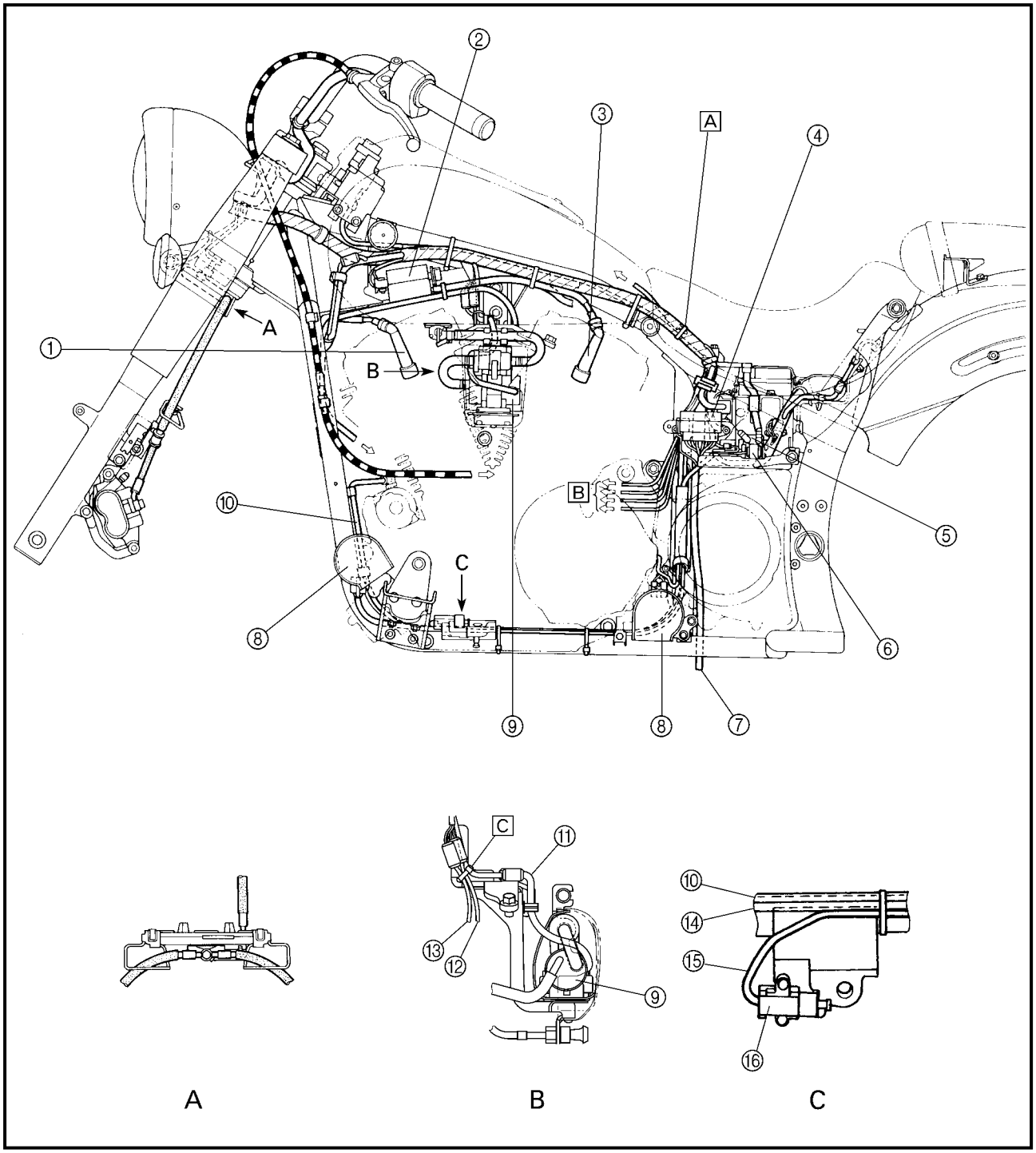

① Battery
② Turn signal relay
③ Relay unit
④ Oil tank breather hose
⑤ Ignition coil (front cylinder)
⑥ Main switch coupler
⑦ Meter assembly couplers
⑧ Right handlebar switch lead
⑨ Fuel tank breather hose
⑩ Spark plug cap #4
⑪ Spark plug cap #2
⑫ Sidestand switch coupler
⑬ Pickup coil lead
⑭ Horn leads
⑮ Starter motor lead
⑯ Sidestand switch lead
⑰ Decompression solenoid lead
⑱ Stator coil lead
⑲ Rollover valve

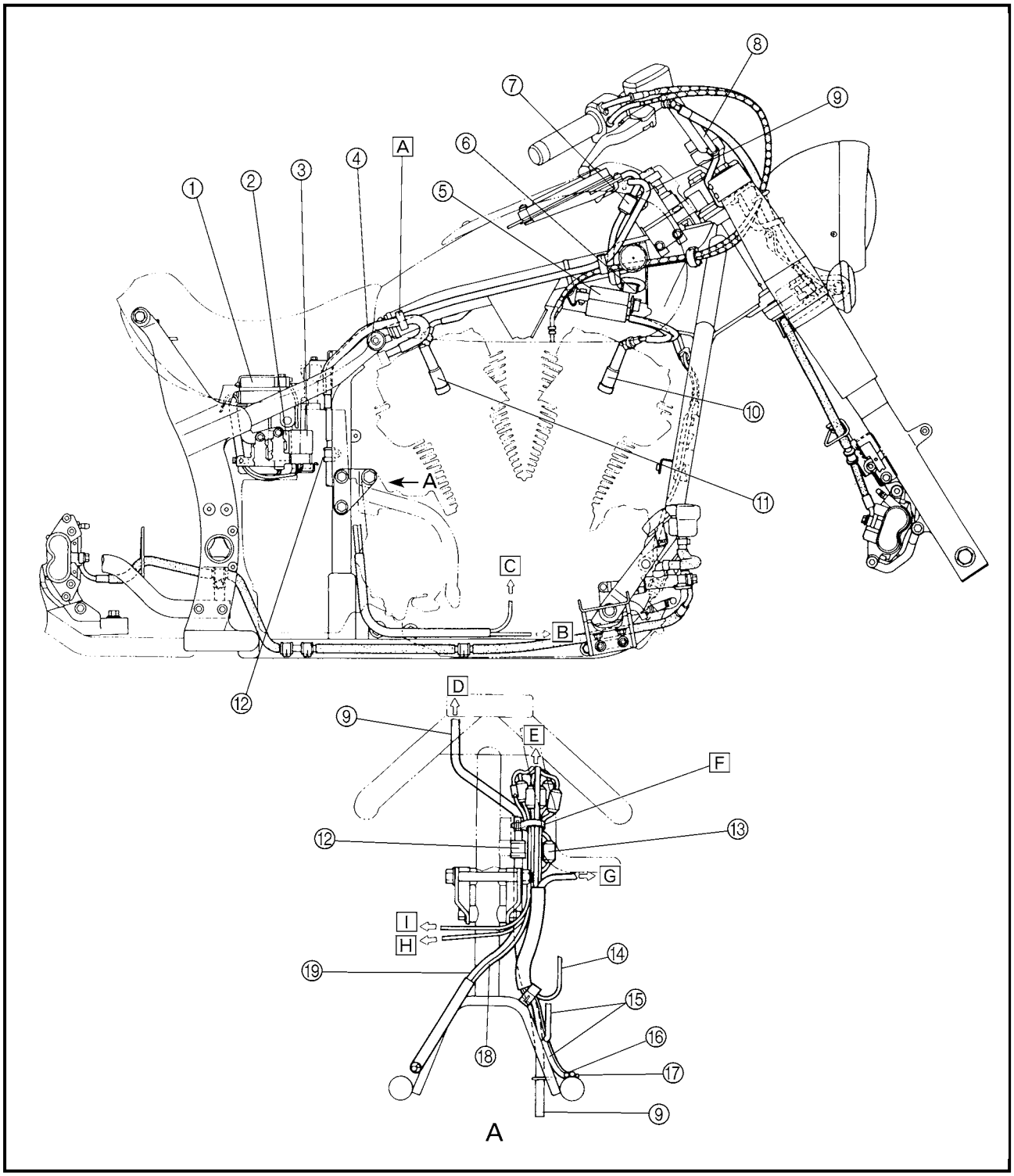

[A] Fasten the fuel tank breather and oil tank breather hose with a plastic clamp and then insert the clamp into the frame.
[B] To the stator coil.
[C] To the decompression solenoid.
[D] To the fuel tank.
[E] To the wire harness.
[F] Fasten the starter motor lead, stator coil lead, decompression solenoid lead, pickup coil lead speed sensor lead and neutral switch lead with a plastic clamp and then insert the clamp into the frame.
[G] To the starter relay.
[H] To the decompression solenoid.
[I] To the speed sensor.

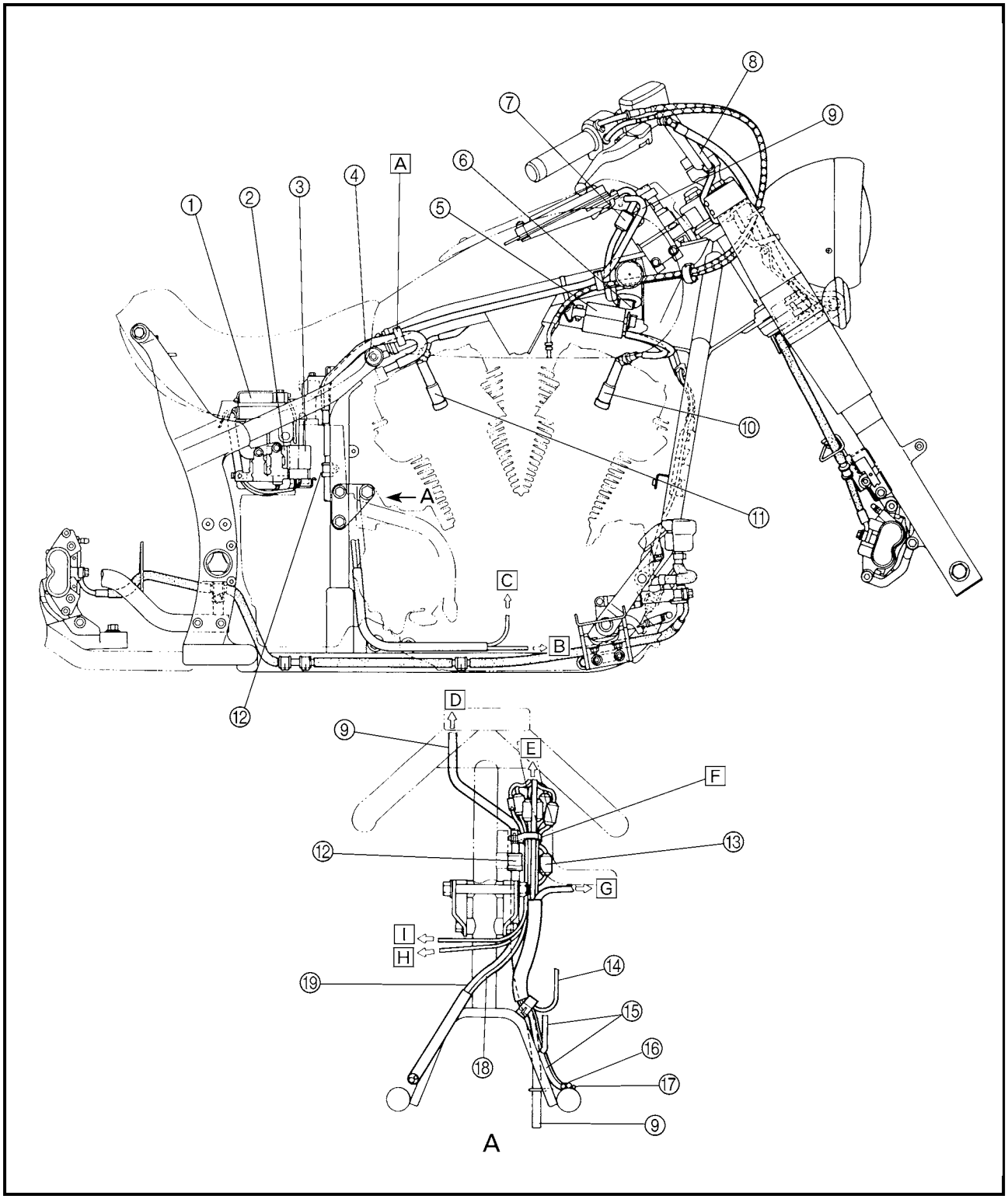

① Fuel tank breather hose
② Oil tank breather hose
③ Relay unit
④ Turn signal relay
⑤ Tail/brake light and rear turn signal light sub-wire harness coupler
⑥ Thermo switch
⑦ Fuse box
⑧ Fuel sender lead
⑨ Vacuum hose (air induction system)
⑩ Solenoid valve lead (California only)
⑪ Spark plug lead #4
⑫ Spark plug lead #2
⑬ Spark plug lead #1
⑭ Spark plug lead #3

A Fasten the wire harness with a plastic clamp and then insert the clamp into the relay bracket.
B Position the white tape on the wire harness with the hole on battery box, as shown.
C To the main switch.
D To the meter assembly.

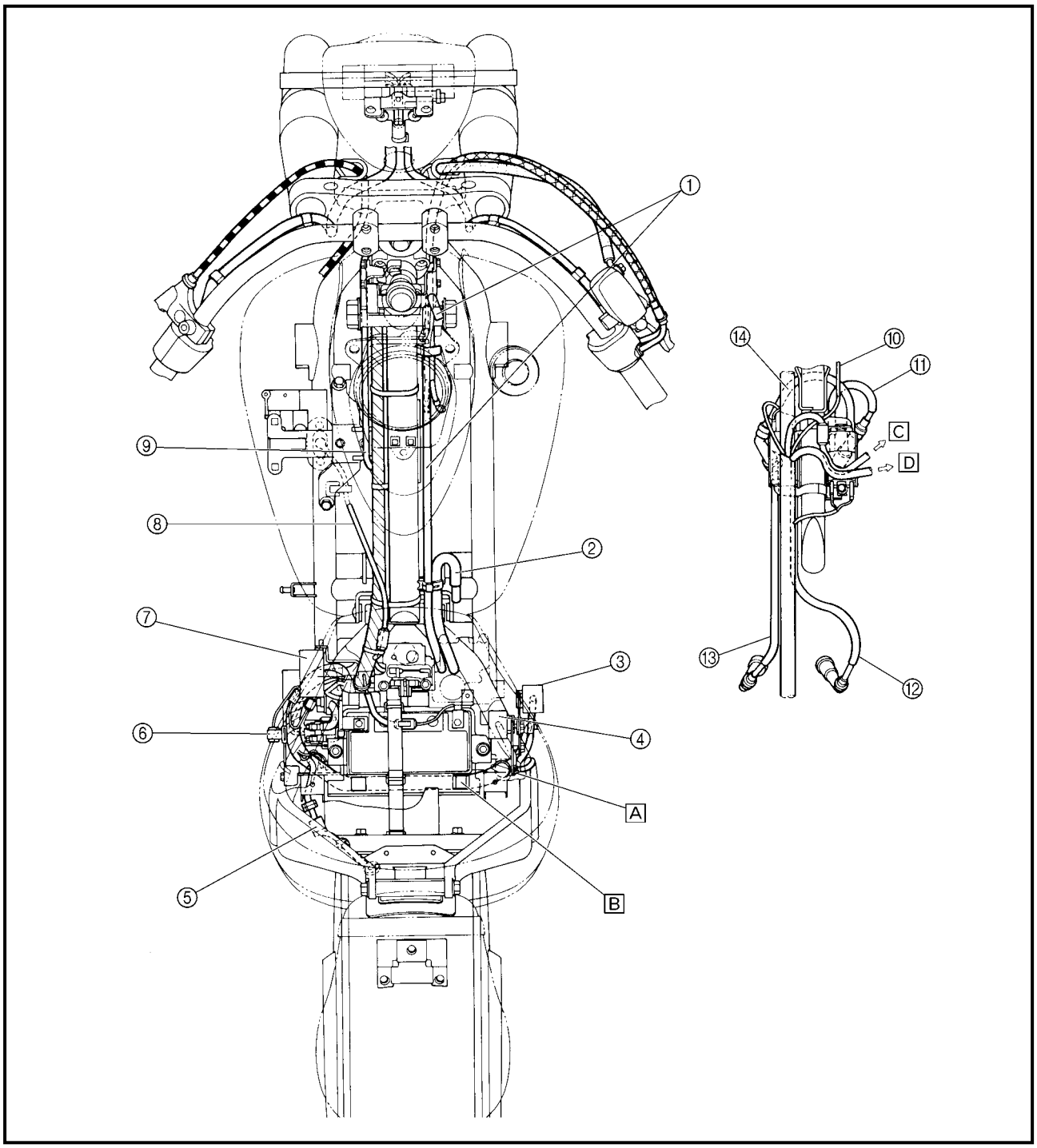

Evaporative emission control system (California only)

① Main switch
② Fuel tank breather hose
③ Charcoal canister to carburetor hose
④ Charcoal canister
⑤ Charcoal canister to rollover valve hose
⑥ Rollover valve
⑦ Solenoid valve coupler
⑧ Solenoid valve
⑨ Solenoid valve to air filter case hose
⑩ Solenoid valve to carburetor hose

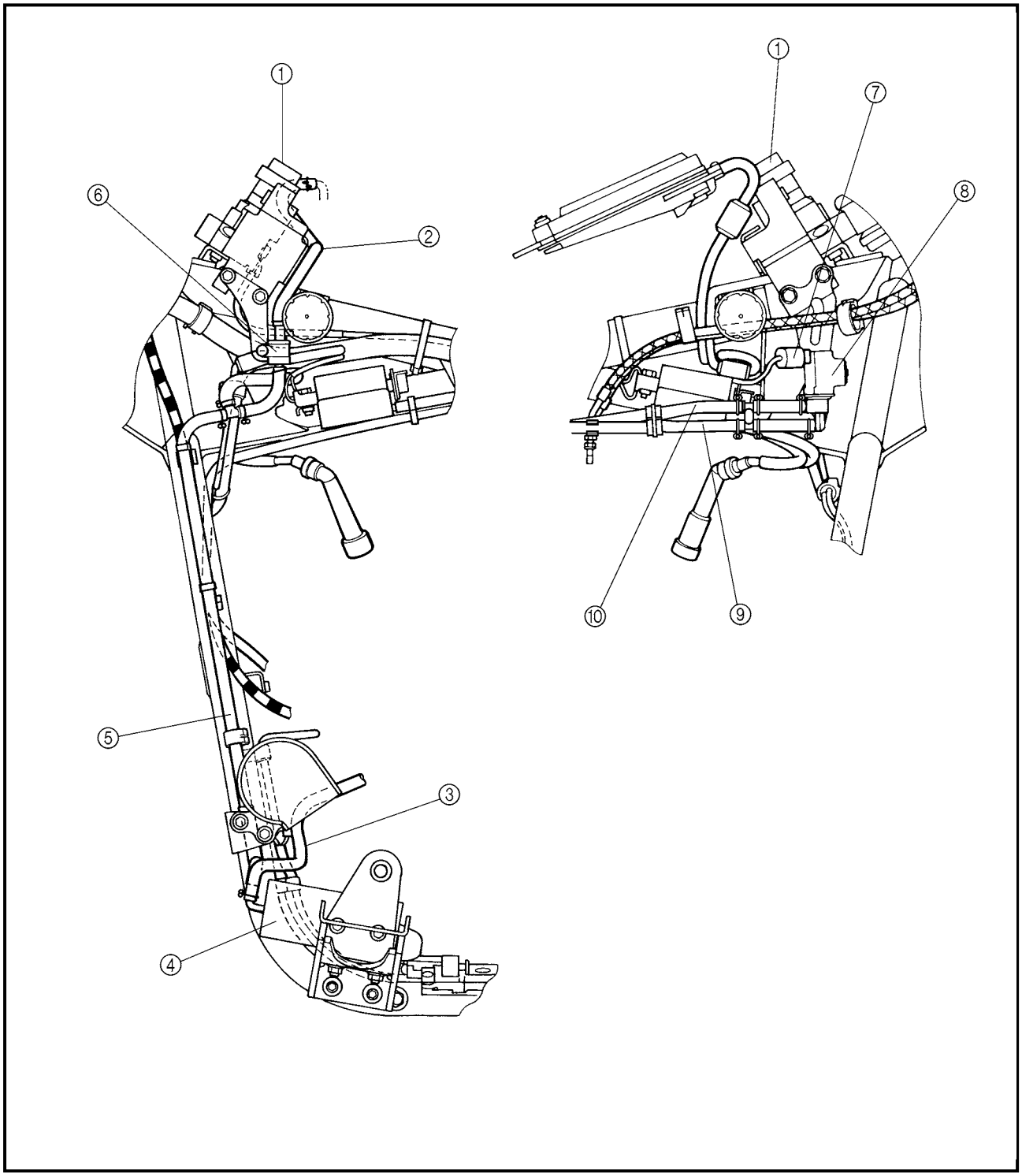

CONTENTS
PERIODIC CHECKS AND ADJUSTMENTS

INTRODUCTION 3-1

PERIODIC MAINTENANCE/LUBRICATION INTERVALS 3-1

GENERAL MAINTENANCE AND LUBRICATION CHART 3-1

SEATS AND SIDE COVERS 3-3

XV16AT ACCESSORY PARTS 3-4

FUEL TANK 3-6

AIR FILTER CASE 3-7

ENGINE 3-8
- ADJUSTING THE VALVE CLEARANCE 3-8
- ADJUSTING THE ENGINE IDLING SPEED 3-12
- ADJUSTING THE THROTTLE CABLE FREE PLAY 3-13
- CHECKING THE SPARK PLUGS 3-14
- CHECKING THE IGNITION TIMING 3-16
- MEASURING THE COMPRESSION PRESSURE 3-18
- CHECKING THE ENGINE OIL LEVEL 3-20
- CHANGING THE ENGINE OIL 3-22
- MEASURING THE ENGINE OIL PRESSURE 3-25
- CHECKING THE TRANSFER GEAR OIL LEVEL 3-26
- CHANGING THE TRANSFER GEAR OIL 3-27
- ADJUSTING THE CLUTCH CABLE FREE PLAY 3-28
- CLEANING THE AIR FILTER ELEMENT 3-29
- CHECKING THE CARBURETOR JOINT 3-30
- CHECKING THE FUEL HOSES AND FUEL FILTER 3-30
- CHECKING THE CYLINDER HEAD BREATHER HOSE AND TRANSFER GEAR CASE BREATHER HOSE 3-31
- CHECKING THE EXHAUST SYSTEM 3-31

CHASSIS 3-32
- ADJUSTING THE FRONT BRAKE 3-32
- ADJUSTING THE REAR BRAKE 3-33
- CHECKING THE BRAKE FLUID LEVEL 3-34

CHECKING THE FRONT BRAKE PADS 3-35
CHECKING THE REAR BRAKE PADS 3-35
ADJUSTING THE REAR BRAKE LIGHT SWITCH 3-35
CHECKING THE BRAKE HOSE 3-36
BLEEDING THE HYDRAULIC BRAKE SYSTEM 3-37
ADJUSTING THE SHIFT PEDAL 3-39
ADJUSTING THE DRIVE BELT SLACK 3-39
CHECKING AND ADJUSTING THE STEERING HEAD 3-41
CHECKING THE FRONT FORK 3-43
ADJUSTING THE REAR SHOCK ABSORBER ASSEMBLY 3-44
CHECKING THE TIRES 3-45
CHECKING AND TIGHTENING THE SPOKES 3-48
CHECKING AND LUBRICATING THE CABLES 3-49
LUBRICATING THE LEVERS AND PEDALS 3-50
LUBRICATING THE SIDESTAND 3-50
LUBRICATING THE REAR SUSPENSION 3-50

ELECTRICAL SYSTEM 3-51
CHECKING AND CHARGING THE BATTERY 3-51
CHECKING THE FUSES 3-56
REPLACING THE HEADLIGHT BULB 3-58
ADJUSTING THE HEADLIGHT BEAM 3-59

INSTRUMENT FUNCTIONS 3-61
INDICATOR LIGHTS 3-61
COMBINATION METER 3-61

EAS00036

PERIODIC CHECKS AND ADJUSTMENTS

INTRODUCTION

This chapter includes all information necessary to perform recommended checks and adjustments. If followed, these preventive maintenance procedures will ensure more reliable vehicle operation, a longer service life and reduce the need for costly overhaul work. This information applies to vehicles already in service as well as to new vehicles that are being prepared for sale. All service technicians should be familiar with this entire chapter.

EAS00037

PERIODIC MAINTENANCE/LUBRICATION INTERVALS

No.		ITEM	ROUTINE	INITIAL	ODOMETER READINGS				
				600 mi (1,000 km) or 1 month	4,000 mi (7,000 km) or 6 months	8,000 mi (13,000 km) or 12 months	12,000 mi (19,000 km) or 18 months	16,000 mi (25,000 km) or 24 months	20,000 mi (31,000 km) or 30 months
1	*	**Valve clearance (See page 3-8.)**	• Check valve clearance when engine is cold. • Adjust if necessary.	**Every 15,000 mi (24,000 km)**					
2		**Spark plug (See page 3-14.)**	• Check condition. • Adjust gap and clean. • Replace at 8,000 mi (13,000 km) or 12 months and thereafter every 8,000 mi (13,000 km) or 12 months.		√	**Replace**	√	**Replace**	√
3	*	**Crankcase ventilation system (See page 3-31.)**	• Check breather hose for cracks or damage. • Replace if necessary.		√	√	√	√	√
4	*	**Fuel line (See page 3-30.)**	• Check fuel hose for cracks or damage. • Replace if necessary.		√	√	√	√	√
5	*	**Fuel filter (See page 3-30.)**	• Replace initial 20,000 mi (31,000 km) and thereafter every 20,000 mi (31,000 km).						**Replace**
6	*	**Exhaust system (See page 3-31.)**	• Check for leakage. • Retighten if necessary. • Replace gasket(s) if necessary.		√	√	√	√	√
7	*	**Idle speed (See page 3-12.)**	• Check and adjust engine idle speed. • Adjust cable free play.	√	√	√	√	√	√
8	*	**Evaporative Emission control system (For California only)**	• Check control system for damage. • Replace if necessary.				√		√

* Since these items require special tools, data and technical skills, they should be serviced by a Yamaha dealer.

GENERAL MAINTENANCE AND LUBRICATION CHART

No.		ITEM	ROUTINE	TYPE	INITIAL	ODOMETER READINGS				
					600 mi (1,000 km) or 1 month	4,000 mi (7,000 km) or 6 months	8,000 mi (13,000 km) or 12 months	12,000 mi (19,000 km) or 18 months	16,000 mi (25,000 km) or 24 months	20,000 mi (31,000 km) or 30 months
1		**Engine oil (See page 3-22.)**	• Replace	See page 3-21.	√	√	√	√	√	√
2	*	**Oil filter**	• Replace	—	√		√		√	
3	*	**Air filter (See page 3-29.)**	• Clean with compressed air. • Replace if necessary.	—		√	√	√	√	√
4	*	**Front brake (See page 3-32.)**	• Check operation and fluid leakage. (See page 3-34) • Correct if necessary.	—	√	√	√	√	**Replace brake fluid**	√
5	*	**Rear brake (See page 3-33.)**	• Check operation and fluid leakage. (See page 3-34) • Correct if necessary.	—	√	√	√	√	**Replace brake fluid**	√

No.		ITEM	ROUTINE	TYPE	INITIAL	ODOMETER READINGS				
					600 mi (1,000 km) or 1 month	4,000 mi (7,000 km) or 6 months	8,000 mi (13,000 km) or 12 months	12,000 mi (19,000 km) or 18 months	16,000 mi (25,000 km) or 24 months	20,000 mi (31,000 km) or 30 months
6	*	**Clutch (See page 3-28.)**	• Check operation and free play. • Correct if necessary.	—	√	√	√	√	√	√
7	*	**Transfer case oil (See page 3-26.)**	• Check vehicle for leakage. • Replace every 16,000 mi (25,000 km) or 24 months.	SAE 80 API "GL-4" hypoid gear oil	**Replace**		**Check**		**Replace**	
8	*	**Control cable (See page 3-49.)**	• Apply chain lube thoroughly.	Yamaha chain and cable lube or SAE 10W30 motor oil	√	√	√	√	√	√
9	*	**Rear arm pivot bearing (See page 4-84.)**	• Check bearing assembly for looseness. • Moderately repack every 16,000 mi (25,000 km).	Medium weight wheel bearing grease			√		**Repack**	
10		**Brake/ Clutch lever pivot shaft (See page 3-50.)**	• Apply chain lube lightly.	Yamaha chain and cable lube or SAE 10W30 motor oil		√	√	√	√	√
11		**Brake pedal and shift pedal shaft (See page 3-50.)**	• Lubricate • Apply chain lube lightly.	Yamaha chain and cable lube or SAE 10W30 motor oil		√	√	√	√	√
12	*	**Sidestand pivot (See page 3-50.)**	• Check operation and lubricate. • Apply chain lube lightly.	Yamaha chain and cable lube or SAE 10W30 motor oil		√	√	√	√	√
13	*	**Sidestand switch (See page 3-50.)**	• Check and clean or replace if necessary.	—	√	√	√	√	√	√
14	*	**Front fork (See page 3-43.)**	• Check operation and for leakage.	—		√	√	√	√	√
15	*	**Steering bearings (See page 3-41.)**	• Check bearing assembly for looseness. • Moderately repack every 16,000 mi (25,000 km).	Lithium soap base grease		√	√	√	**Repack**	√
16	*	**Wheel bearings (See page 4-5.)**	• Check bearings for smooth rotation.	—		√	√	√	√	√
17	*	**Rear suspension link pivots (See page 4-84.)**	• Apply grease lightly.	Molybdenum disulfide grease					√	
18	*	**Drive belt (See page 3-39.)**	• Check the belt tension. • Adjust if necessary.	—	√	**Every 2,500 mi (4,000 km)**				

* Since these items require special tools, data and technical skills, they should be serviced by a Yamaha dealer.

NOTE:

The air filter element needs more frequent service if you are riding in unusually wet or dry areas.

1.Hydraulic brake system

- Replace the brake fluid after disassembling the master cylinder or caliper cylinder.
- Check the brake fluid level and add fluid as required.
- Replace the master cylinder and caliper cylinder oil seals every two years.
- Replace the brake hoses every four years or if cracked or damaged.

SEATS AND SIDE COVERS

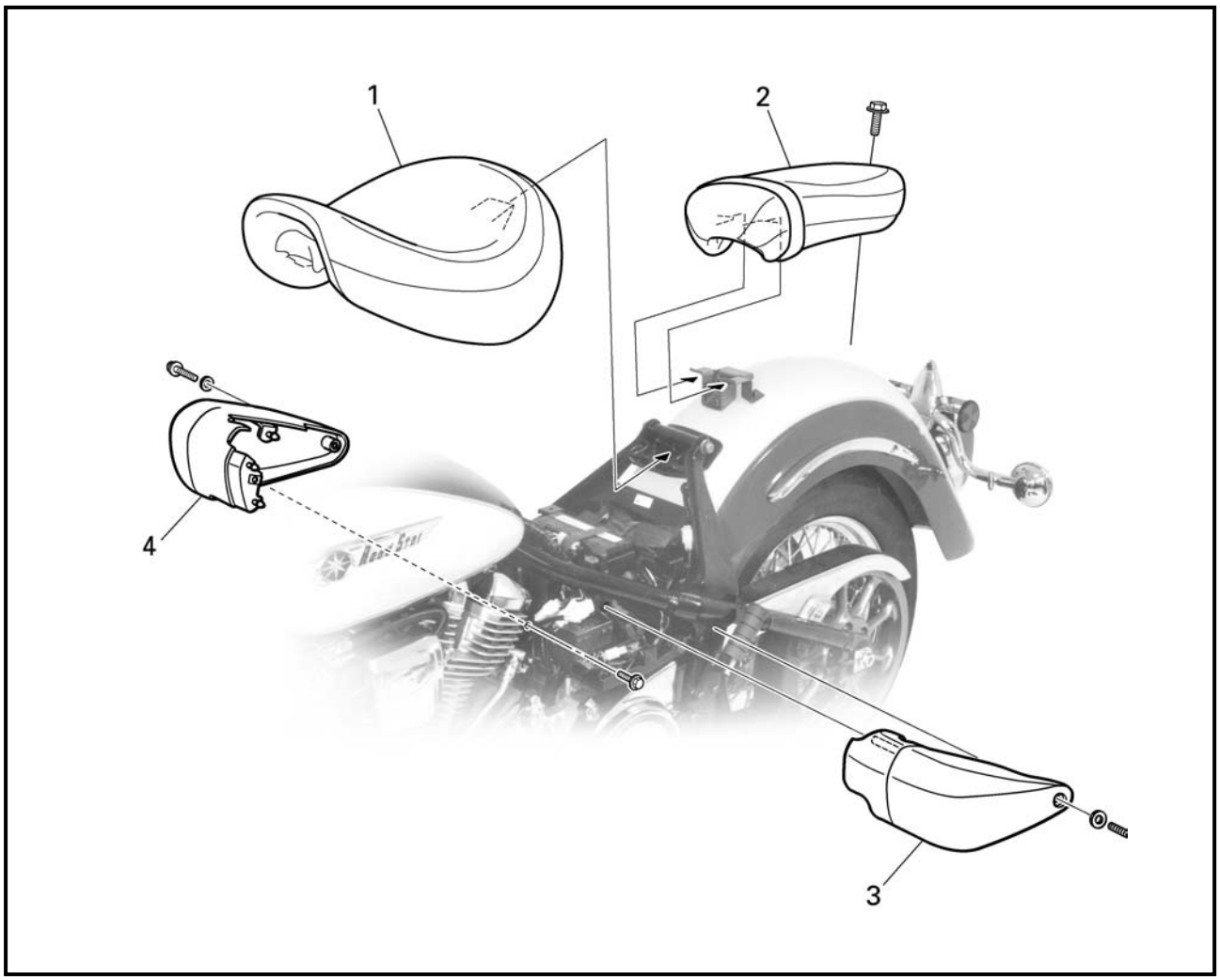

Order	Job/Part	Q'ty	Remarks
	Removing the seats and side covers		Remove the parts in the order listed.
1	Rider seat	1	
2	Passenger seat	1	
3	Left side cover	1	
4	Right side cover	1	
			For installation, reverse the removal procedure.

XV16AT ACCESSORY PARTS

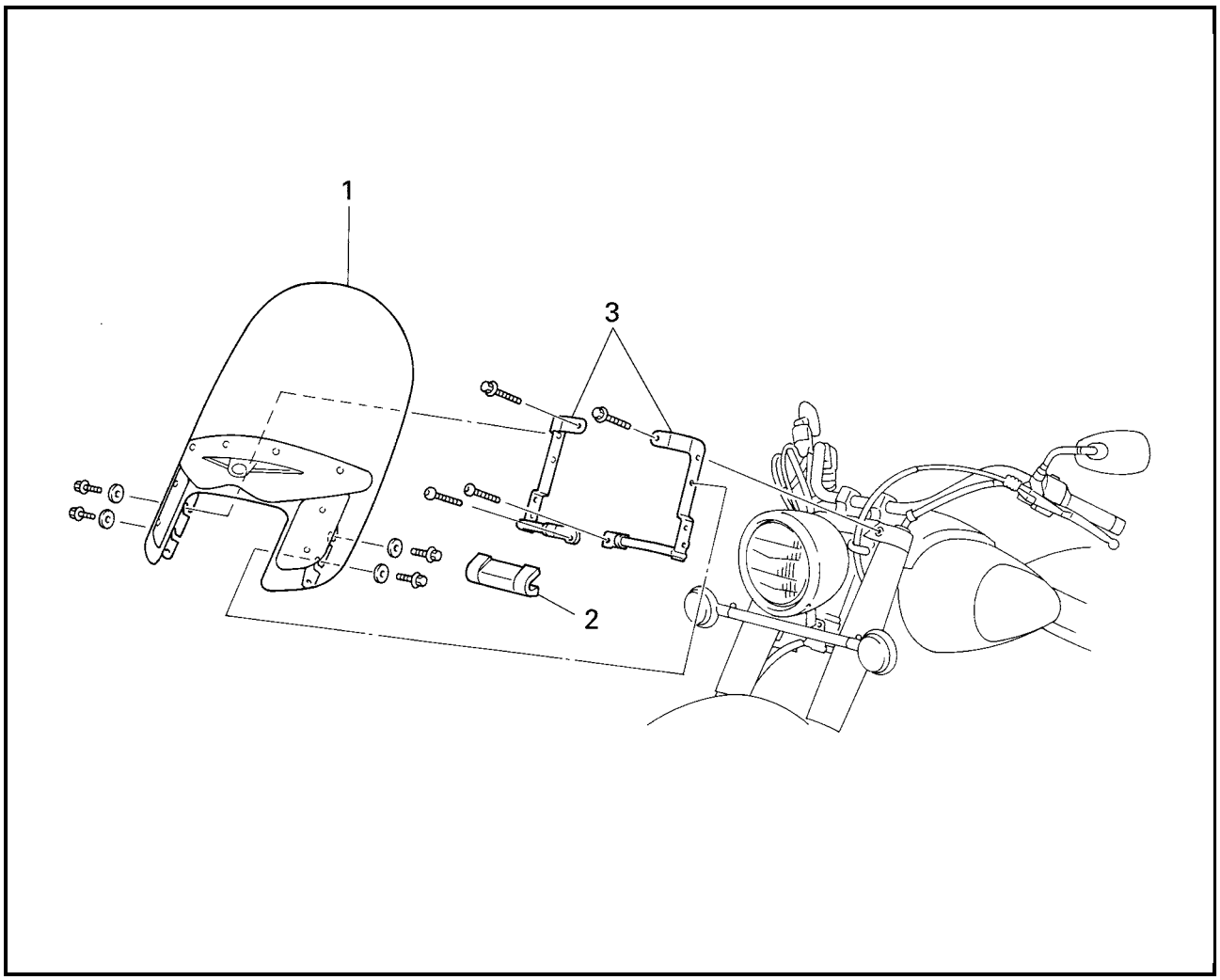

Order	Job/Part	Q'ty	Remarks
	Accessory parts removal (front)		Remove the parts in the order listed.
1	Front windshield	1	
2	Chrome flasher bracket cover	1	
3	Windshield stay	2	
			For installation, reverse the removal procedure.

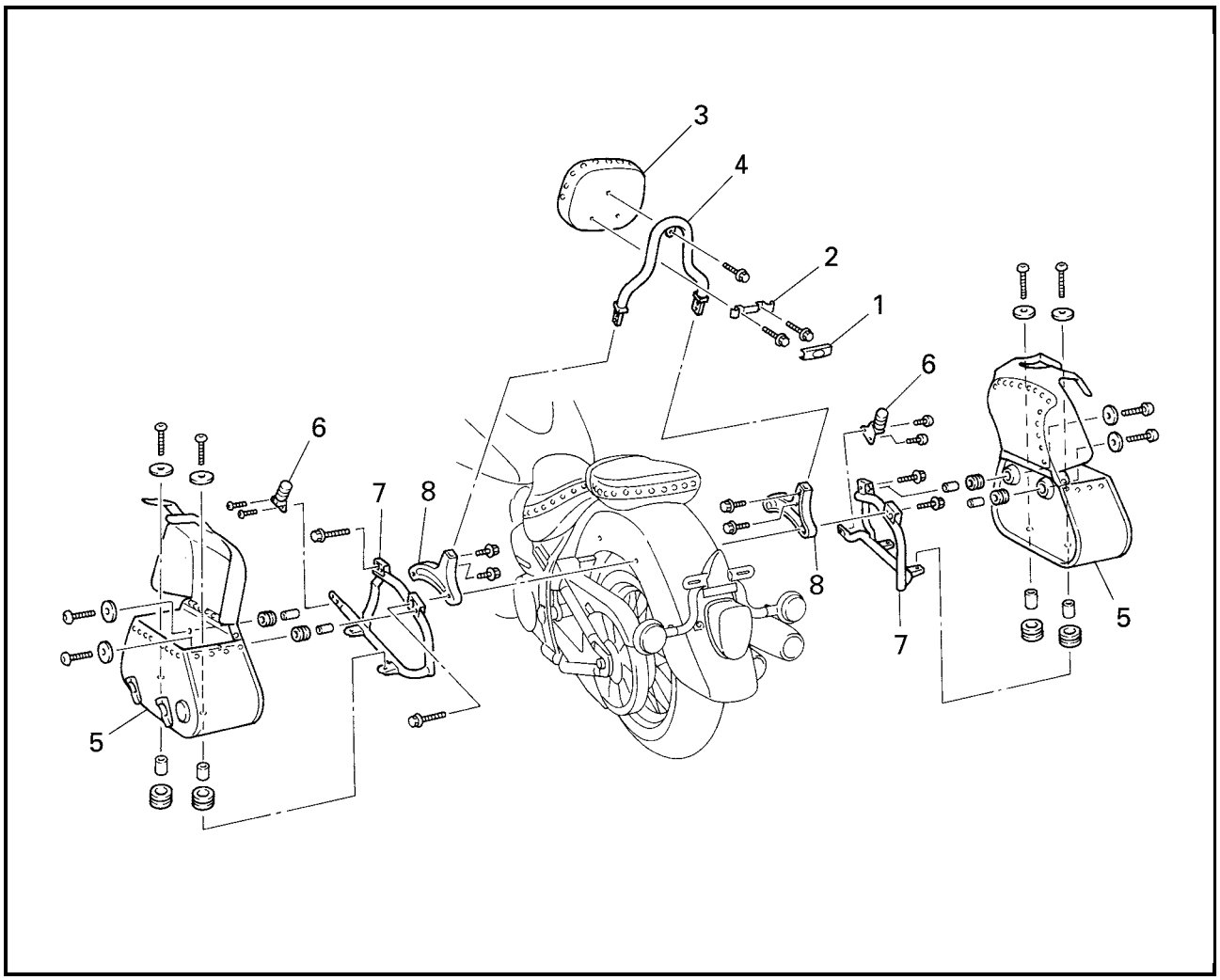

Order	Job/Part	Q'ty	Remarks
	Accessory parts removal (rear)		Remove the parts in the order listed.
1	Emblem	1	
2	Backrest holder	1	
3	Backrest	1	
4	Backrest stay	1	
5	Saddlebag	2	
6	Passenger footrest	2	
7	Saddlebag stay	2	
8	Grip	2	
			For installation, reverse the removal procedure.

EAS00040
FUEL TANK

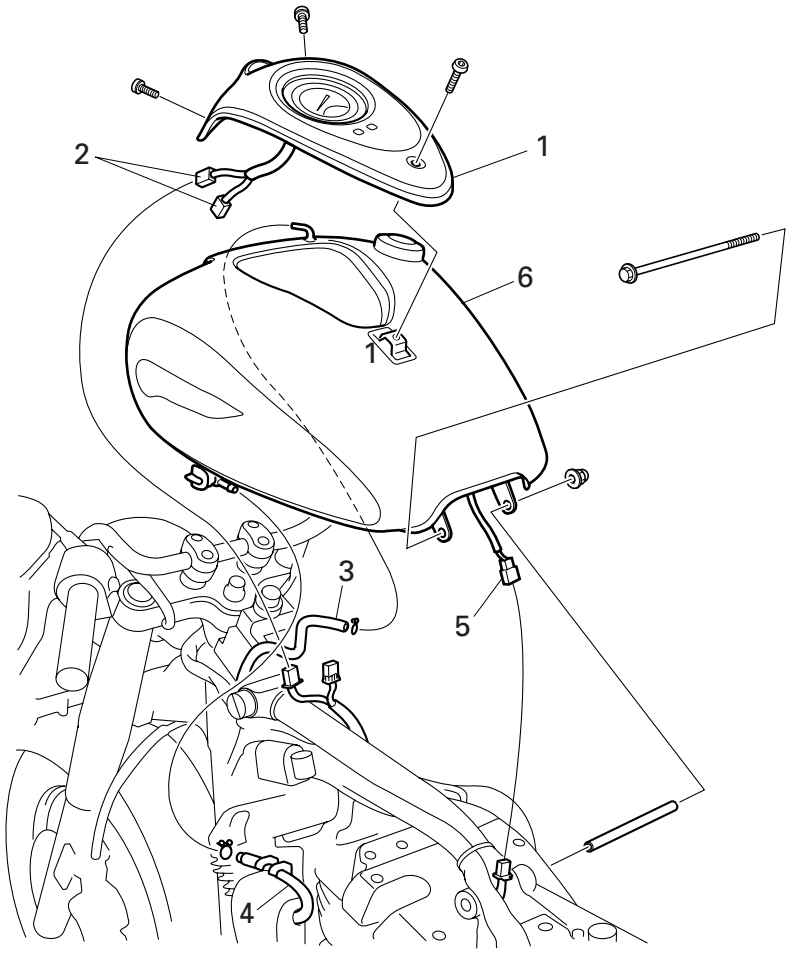

Order	Job/Part	Q'ty	Remarks
	Removing the fuel tank		Remove the parts in the order listed.
	Rider seat		Refer to "SEATS AND SIDE COVERS".
1	Meter assembly		
2	Meter assembly coupler	2	Disconnect.
3	Fuel tank breather hose	1	
4	Fuel hose		Disconnect. **NOTE:** Before disconnecting the fuel hose, set the fuel cock to "OFF".
5	Fuel sender coupler	1	Disconnect.
6	Fuel tank	1	For installation, reverse the removal procedure.

AIR FILTER CASE

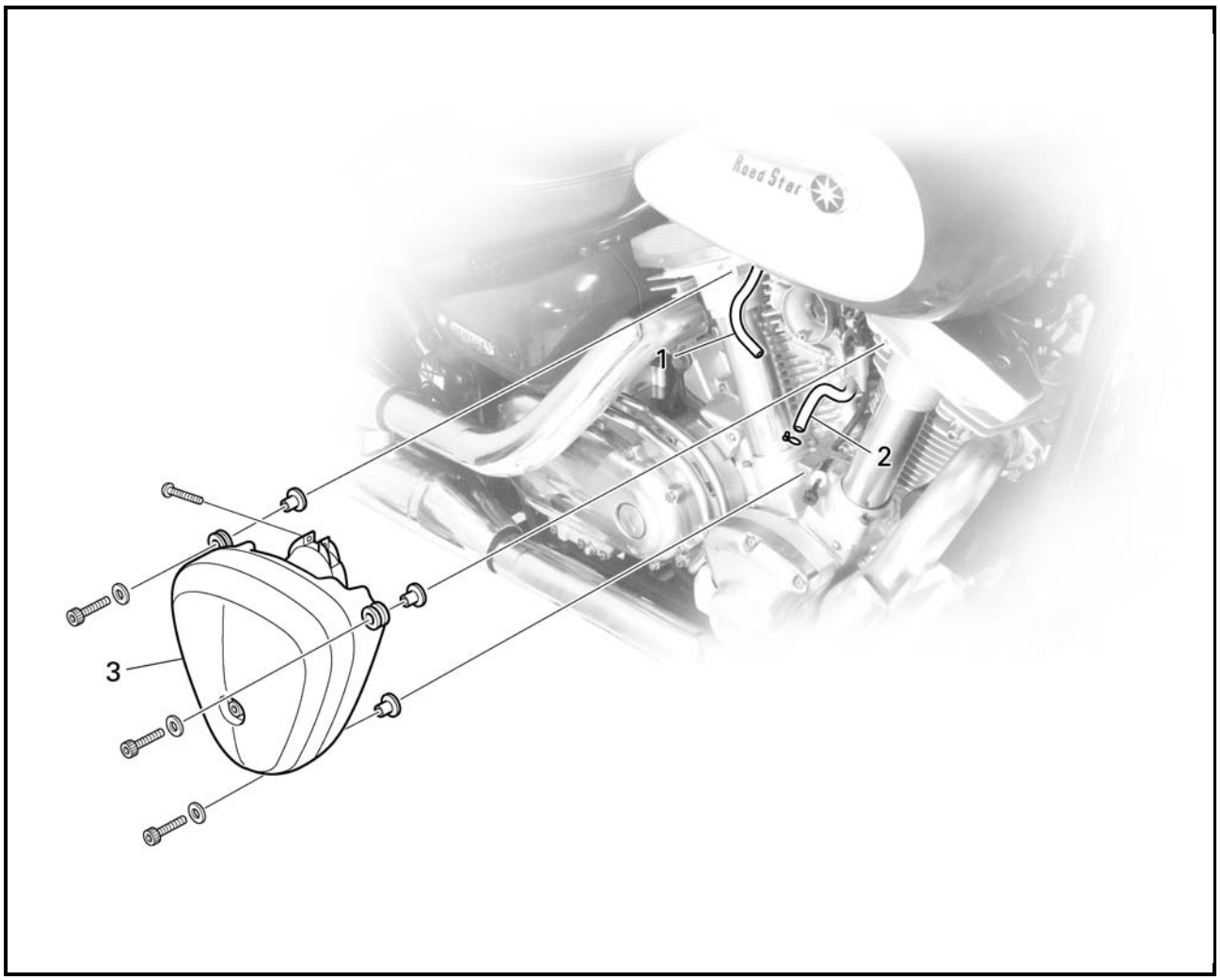

Order	Job/Part	Q'ty	Remarks
	Removing the air filter case		Remove the parts in the order listed.
1	Vacuum chamber breather hose (air filter case to solenoid valve hose)	1	Disconnect.
2	Cylinder head breather hose	1	Disconnect.
3	Air filter case	1	For installation, reverse the removal procedure.

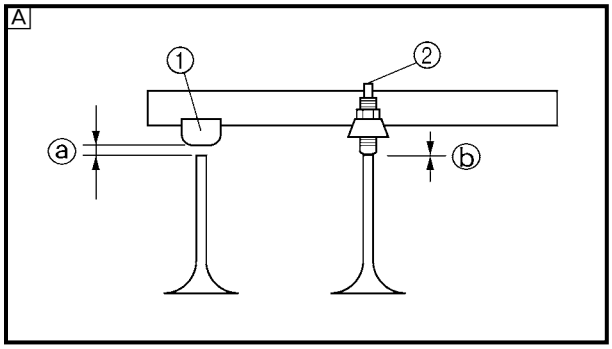

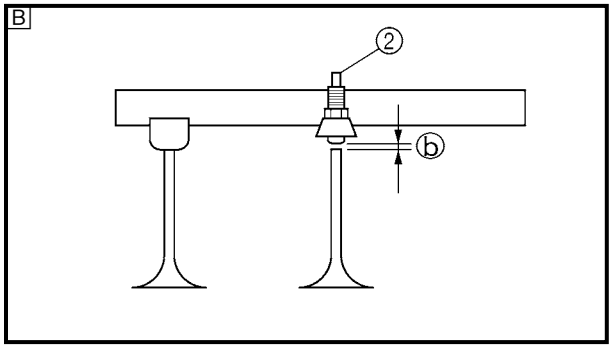

EAS00047
ENGINE

ADJUSTING THE VALVE CLEARANCE

The following procedure applies to all of the valves.

NOTE:

- The valve clearance is automatically adjusted by the hydraulic valve lifter. However, there are times that the valve clearance is needed to be adjusted manually. If this is the case, adjust the clearance of the two maladjusted or worn valves, of a rocker arm, with the adjusting screw.

A If clearance is on the slip side ①, loosen the adjusting screw and bring the valve clearance ⓐ within specification. Check if the valve clearance ⓑ on the adjusting screw ② side is within specification.

B If clearance is on the adjusting screw ② side, tighten the adjusting screw and bring the valve clearance ⓑ within specification.

- Valve clearance adjustment should be made on a cold engine, at room temperature.
- When the valve clearance is to be measured or adjusted, the piston must be at top dead center (TDC) on the compression stroke.

1. Remove:
   - rider seat
     Refer to “SEATS AND SIDE COVERS”.
   - fuel tank
     Refer to “FUEL TANK”.

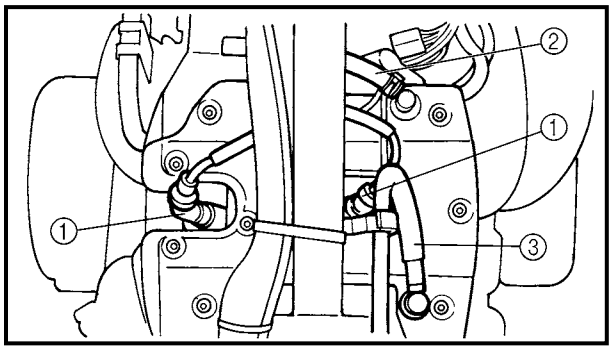

2. Disconnect:
   - spark plug caps ①
   - cylinder head breather hose ②
   - oil tank breather hose ③
3. Remove:
   - spark plugs
   - cylinder head covers (upper)
   - gaskets
   - dowel pins

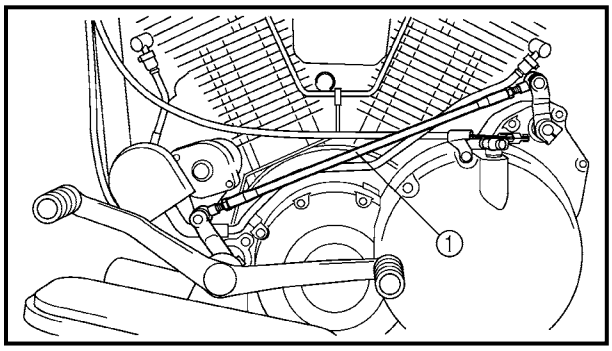

4. Remove:
   - shift rod ①

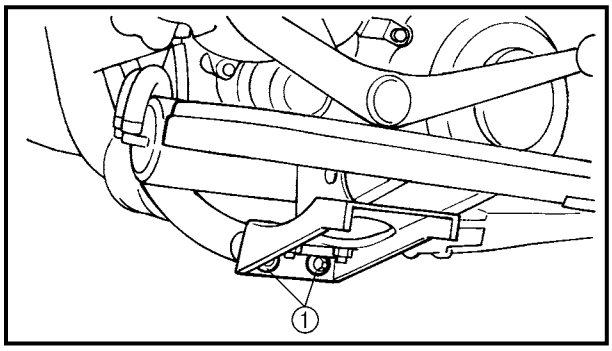

5. Remove:
   - rider footrest (left) bolts ①

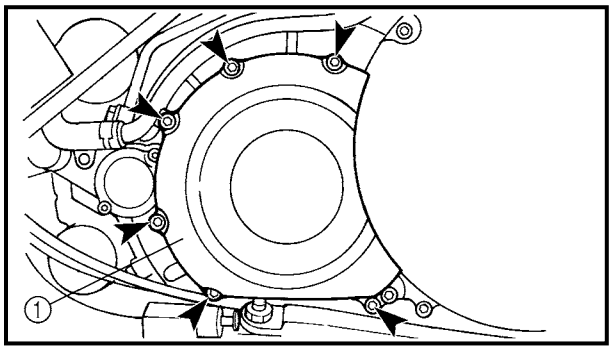

6. Remove:
   - engine left side cover ①

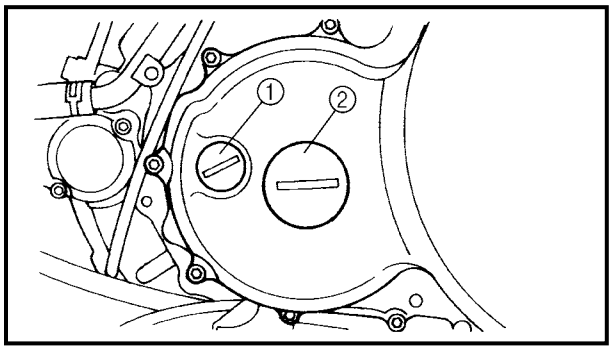

7. Remove:
   - timing mark accessing screw ①
   - crankshaft end cover ②

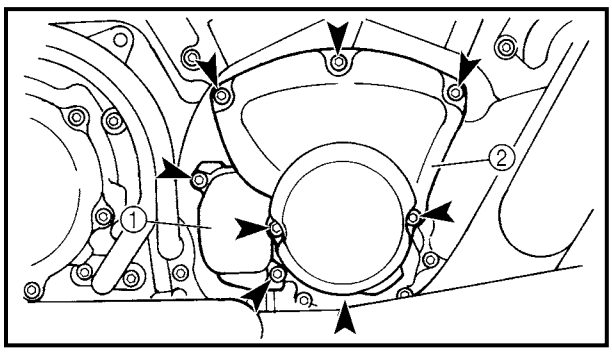

8. Remove:
   - decompression solenoid cover ①
   - camshaft sprocket cover ②

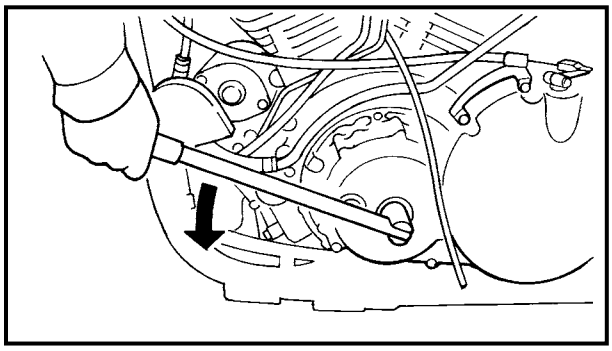

9. Measure:
   - valve clearance
     Out of specification → Adjust.

Valve clearance (cold)
Intake valve
0 ~ 0.04 mm (0 ~ 0.0016 in)
Exhaust valve
0 ~ 0.04 mm (0 ~ 0.0016 in)

CAUTION:

Be sure to check the intake and exhaust valves.

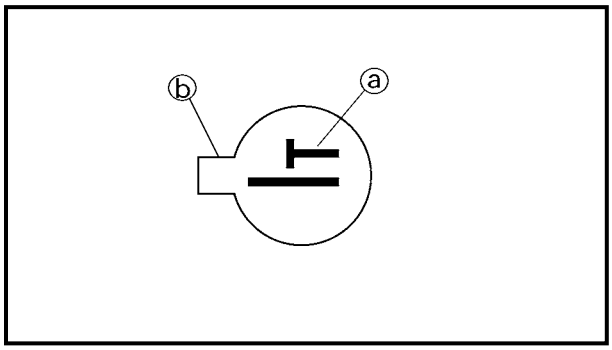

▼▼▼▼▼▼▼▼▼▼▼▼▼▼▼▼▼▼▼▼▼▼▼▼▼▼▼▼▼▼

Piston #1 TDC (rear cylinder)

a. Turn the crankshaft counterclockwise.

b. When piston #1 is at TDC on the compression stroke, align the TDC mark ⓐ on the pickup coil rotor with the pointer ⓑ on the clutch/pickup coil rotor cover.

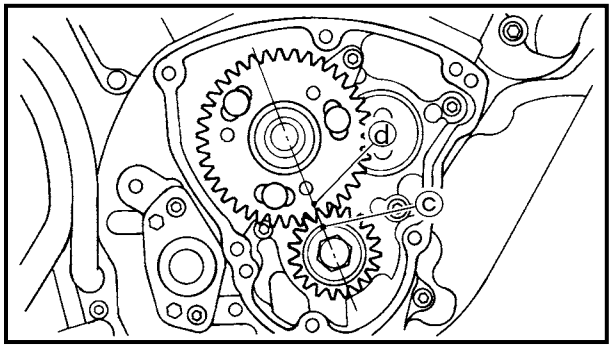

c. Check the camshaft drive gear mark ⓒ position and camshaft driven gear mark ⓓ position as shown.
   If the marks are not aligned, turn the crankshaft counterclockwise 360 degrees and recheck step b.

d. Measure the valve clearance with a thickness gauge.

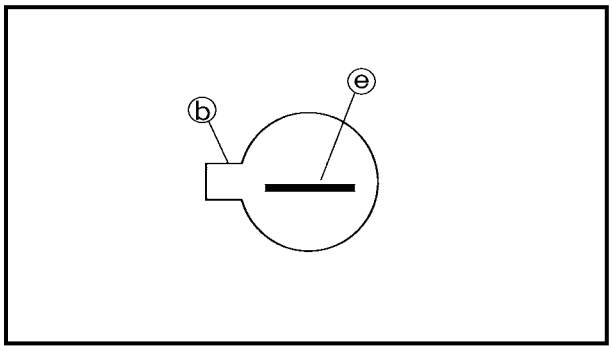

Piston #2 TDC (front cylinder)

a. Turn the crankshaft counterclockwise from the piston #1 TDC by 405 degrees.

b. When piston #2 is at TDC on the compression stoke, align the TDC mark ⓔ on the pickup coil rotor with the pointer ⓑ on the clutch/pickup coil rotor cover.

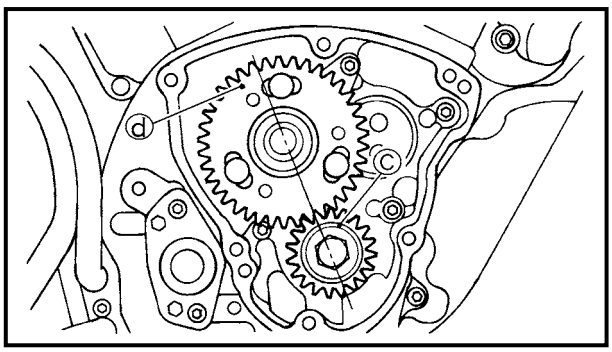

c. Check the camshaft drive gear mark ⓒ position and camshaft driven gear mark ⓓ position as shown.

d. Measure the valve clearance with a thickness gauge.

▲▲▲▲▲▲▲▲▲▲▲▲▲▲▲▲▲▲▲▲▲▲▲▲▲▲▲▲▲▲

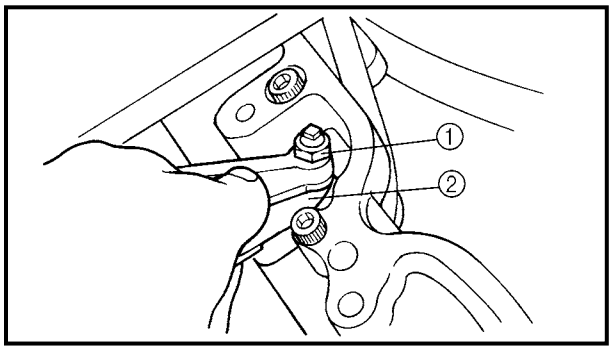

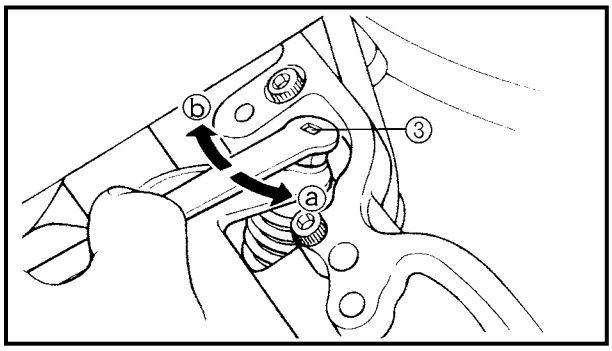

10.Adjust:
- valve clearance

▼▼▼▼▼▼▼▼▼▼▼▼▼▼▼▼▼▼▼▼▼▼▼▼▼▼▼▼▼▼▼▼

a. Loosen the locknut ①.

b. Insert a thickness gauge ② between the end of the adjusting screw and the valve tip.

c. Turn the adjusting screw ③ in direction ⓐ or ⓑ until the specified valve clearance is obtained.

	Adjusting screw side	Slip side
Direction ⓐ	**Valve clearance is increased.**	**Valve clearance is decreased.**
Direction ⓑ	**Valve clearance is decreased.**	**Valve clearance is increased.**

d. Hold the adjusting screw to prevent it from moving and tighten the locknut to specification.

	Locknut **20 Nm (2.0 m • kg, 14 ft • lb)**

e. Measure the valve clearance again.

f. If the valve clearance is still out of specification, repeat all of the valve clearance adjustment steps until the specified clearance is obtained.

▲▲▲▲▲▲▲▲▲▲▲▲▲▲▲▲▲▲▲▲▲▲▲▲▲▲▲▲▲▲▲▲

11.Install:
- all removed parts

NOTE:
For installation, reverse the removal procedure. Note the following points.

Refer to "ROCKER ARMS, PUSH RODS AND VALVE LIFTERS" in chapter 5.

12.Adjust:
- installed shift rod length
  Refer to "ADJUSTING THE SHIFT PEDAL".

EAS00054
ADJUSTING THE ENGINE IDLING SPEED

NOTE:
Prior to adjusting the engine idling speed, the carburetor synchronization should be adjusted properly, the air filter element should be clean, and the engine should have adequate compression.

1. Start the engine and let it warm up for several minutes.
2. Remove:
   - rider seat
     Refer to "SEATS AND SIDE COVERS".
3. Remove:
   - fuel tank bolt ①
4. Lift up the fuel tank end.

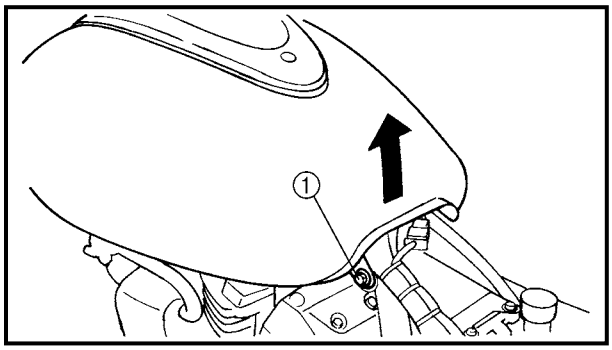

5. Install:
   - inductive tachometer ①
     (onto the spark plug lead of cylinder #1)

	Inductive tachometer **YU8036-A**

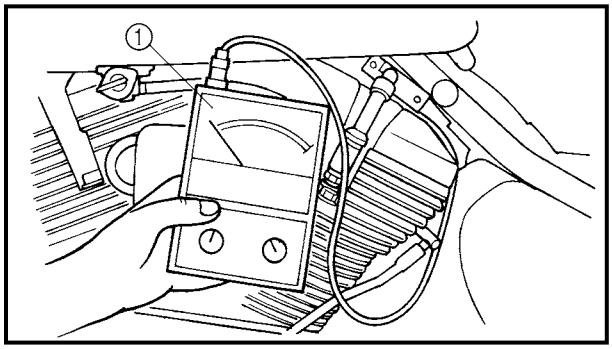

6. Measure:
   - engine idling speed
     Out of specification → Adjust.

	Engine idling speed **850 ~ 950 r/min**

7. Adjust:
   - engine idling speed

▼▼▼▼▼▼▼▼▼▼▼▼▼▼▼▼▼▼▼▼▼▼▼▼▼▼▼▼▼▼▼▼

a. Turn the throttle stop screw ① in direction ⓐ or ⓑ until the specified engine idling speed is obtained.

Direction ⓐ	**Engine idling speed is increased.**
Direction ⓑ	**Engine idling speed is decreased.**

▲▲▲▲▲▲▲▲▲▲▲▲▲▲▲▲▲▲▲▲▲▲▲▲▲▲▲▲▲▲▲▲

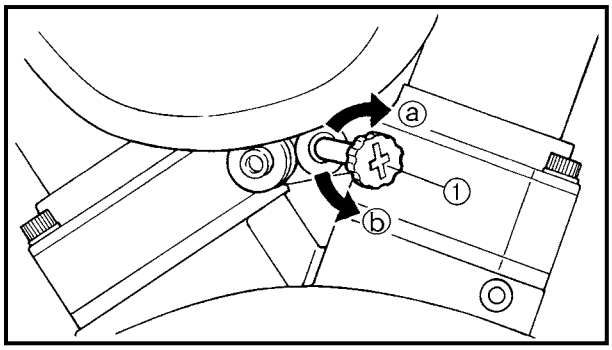

8. Adjust:
   - throttle cable free play
     Refer to "ADJUSTING THE THROTTLE CABLE FREE PLAY".

Throttle cable free play (at the flange of the throttle grip)
4 ~ 8 mm (0.16 ~ 0.31 in)

EAS00058
ADJUSTING THE THROTTLE CABLE FREE PLAY

NOTE:
Prior to adjusting the throttle cable free play, the engine idling speed should be adjusted.

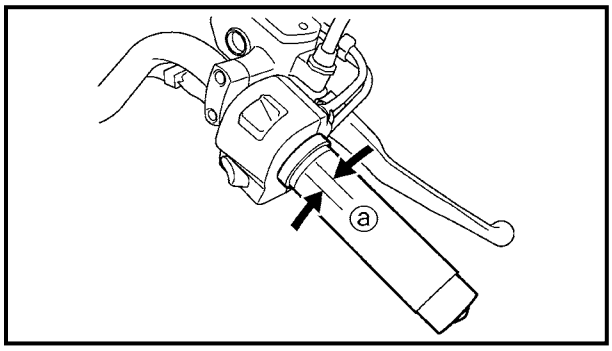

1. Measure:
   - throttle cable free play ⓐ
     Out of specification → Adjust.

Throttle cable free play (at the flange of the throttle grip)
4 ~ 8 mm (0.16 ~ 0.31 in)

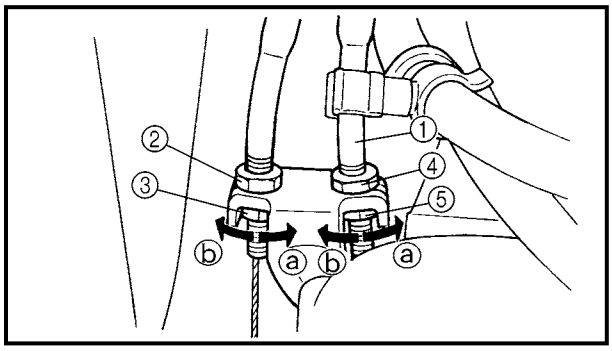

2. Adjust:
   - throttle cable free play

NOTE:
When the throttle is opened, the accelerator cable ① is pulled.

Carburetor side

a. Remove the rider seat and fuel tank. Refer to "SEATS AND SIDE COVERS" and "FUEL TANK".
b. Loosen the locknut ② on the decelerator cable.
c. Turn the adjusting nut ③ in direction ⓐ or ⓑ to take up any slack on the decelerator cable.
d. Loosen the locknut ④ on the accelerator cable.

e. Turn the adjusting nut ⑤ in direction ⓐ or ⓑ until the specified throttle cable free play is obtained.

Direction ⓐ	**Throttle cable free play is increased.**
Direction ⓑ	**Throttle cable free play is decreased.**

f. Tighten the locknuts.

NOTE:
If the specified throttle cable free play cannot be obtained on the carburetor side of the cable, use the adjusting nut on the handlebar side.

g. Install the fuel tank and rider seat. Refer to "FUEL TANK" and "SEATS AND SIDE COVERS".

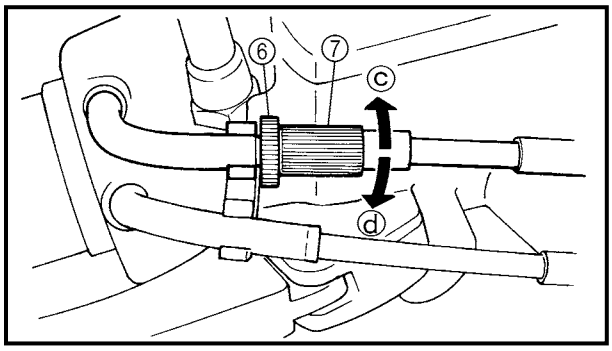

Handlebar side

a. Loosen the locknut ⑥.

b. Turn the adjusting nut ⑦ in direction ⓒ or ⓓ until the specified throttle cable free play is obtained.

Direction ⓒ	**Throttle cable free play is increased.**
Direction ⓓ	**Throttle cable free play is decreased.**

c. Tighten the locknut.

⚠ WARNING

After adjusting the throttle cable free play, start the engine and turn the handlebar to the right and to the left to ensure that this does not cause the engine idling speed to change.

▲▲▲▲▲▲▲▲▲▲▲▲▲▲▲▲▲▲▲▲▲▲▲▲▲▲▲▲▲▲

EAS00059

CHECKING THE SPARK PLUGS

The following procedure applies to all of the spark plugs.

1. Remove:
   - rider seat
   - fuel tank

   Refer to "SEATS AND SIDE COVERS" and "FUEL TANK".

2. Disconnect:
   - spark plug cap
3. Remove:
   - spark plug

CAUTION:

Before removing the spark plugs, blow away any dirt accumulated in the spark plug wells with compressed air to prevent it from falling into the cylinders.

4. Check:
   - spark plug type
     Incorrect → Change.

Spark plugs
Model (manufacturer)
DPR7EA-9 (NGK)
X22EPR-U9 (DENSO)

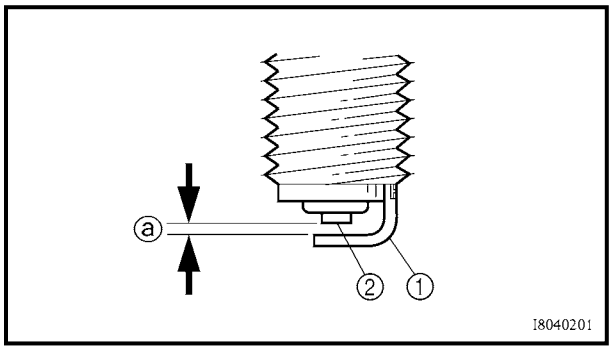

5. Check:
   - electrodes ①
     Damage/wear → Replace the spark plug.
   - insulator ②
     Abnormal color → Replace the spark plug.
     Normal color is medium-to-light tan.
6. Clean:
   - spark plug
     (with a spark plug cleaner or wire brush)
7. Measure:
   - spark plug gap ⓐ
     (with a wire gauge)
     Out of specification → Regap.

Spark plug gap
0.8 ~ 0.9 mm (0.031 ~ 0.35 in)

8. Install:
   - spark plug **18 Nm (1.8 m · kg, 13 ft · lb)**

NOTE:

Before installing the spark plug, clean the spark plug and gasket surface.

9. Connect:
   - spark plug cap
10. Install:
    - fuel tank
    - rider seat
      Refer to “FUEL TANK” and “SEATS AND SIDE COVERS”.

EAS00061
CHECKING THE IGNITION TIMING

NOTE:
Prior to checking the ignition timing, check the wiring connections of the entire ignition system. Make sure all connections are tight and free of corrosion.

1. Remove:
   - rider seat
     Refer to "SEATS AND SIDE COVERS".
2. Remove:
   - fuel tank bolt ①
3. Lift up the fuel tank end.

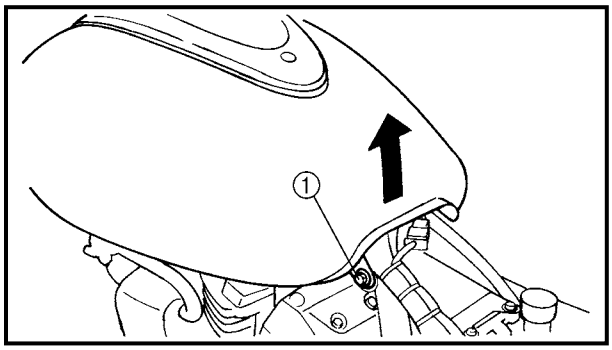

4. Remove:
   - shift rod ①

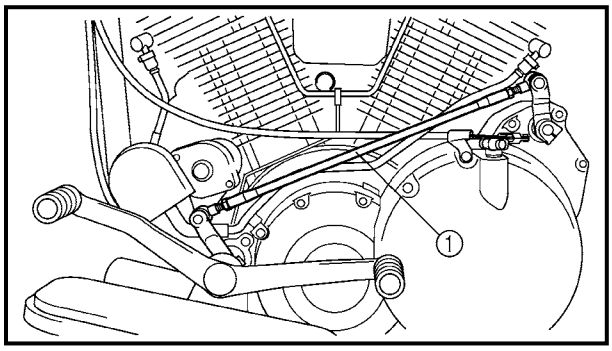

5. Remove:
   - rider footrest (left) bolts ①

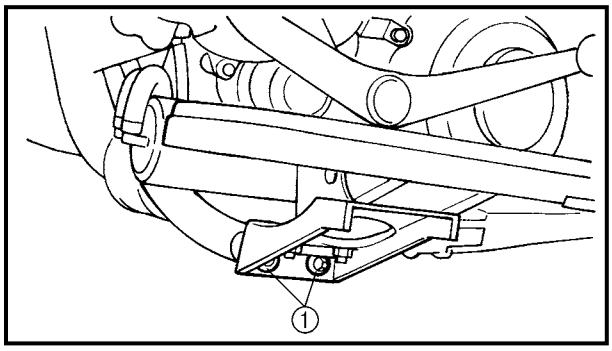

6. Remove:
   - engine left side cover ①

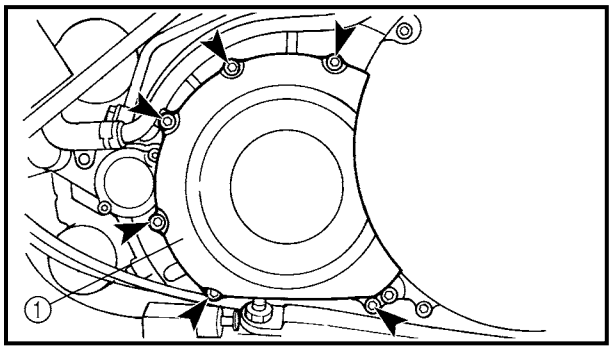

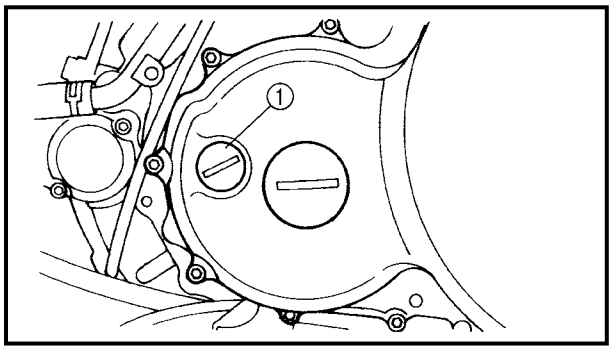

7. Remove:
   - timing mark accessing screw ①

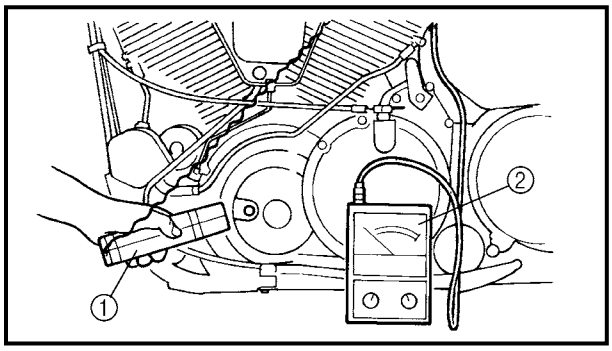

8. Install:
   - timing light ①
   - inductive tachometer ②
     (onto the spark plug lead of cylinder #1)

	Timing light **YU-33277-A** **Inductive tachometer** **YU-8036-A**

9. Check:
   - ignition timing

▼▼▼▼▼▼▼▼▼▼▼▼▼▼▼▼▼▼▼▼▼▼▼▼▼▼▼▼▼▼

a. Start the engine, warm it up for several minutes, and then let it run at the specified engine idling speed.

	Engine idling speed **850 ~ 950 r/min**

b. Check that the pointer ⓐ is within the required firing range ⓑ on the pickup coil rotor.

   Incorrect firing range → Check the ignition system.

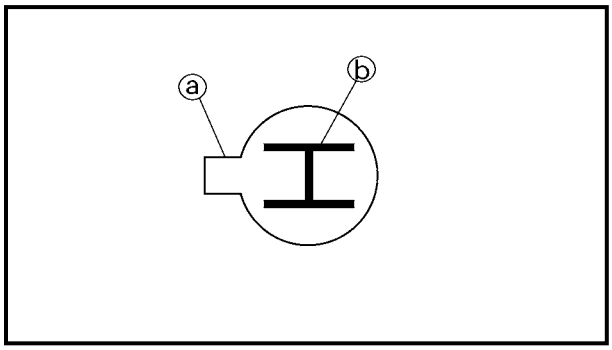

NOTE:
The ignition timing is not adjustable.

▲▲▲▲▲▲▲▲▲▲▲▲▲▲▲▲▲▲▲▲▲▲▲▲▲▲▲▲▲▲

10. Install:
    - all removed parts

NOTE:
For installation, reverse the removal procedure. Note the following point.

Refer to "ROCKER ARMS, PUSH RODS AND VALVE LIFTERS" in chapter 5.

11. Adjust:
- installed shift rod length
  Refer to "ADJUSTING THE SHIFT PEDAL".

EAS00065
MEASURING THE COMPRESSION PRESSURE

The following procedure applies to all of the cylinders.

NOTE:
Insufficient compression pressure will result in a loss of performance.

1. Measure:
   - valve clearance
     Out of specification → Adjust.
     Refer to "ADJUSTING THE VALVE CLEARANCE".
2. Start the engine, warm it up for several minutes, and then turn it off.
3. Remove:
   - rider seat
   - fuel tank
     Refer to "SEATS AND SIDE COVERS" and "FUEL TANK".
4. Remove:
   - camshaft sprocket cover
     Refer to "ROCKER ARMS, PUSH RODS AND VALVE LIFTERS".
   - decompression solenoid
     Refer to "CAMSHAFTS".
5. Install:
   - camshaft sprocket cover
     Refer to "ROCKER ARMS, PUSH RODS AND VALVE LIFTERS".
6. Disconnect:
   - spark plug cap
7. Remove:
   - spark plug

CAUTION:
Before removing the spark plugs, use compressed air to blow away any dirt accumulated in the spark plug wells to prevent it from falling into the cylinders.

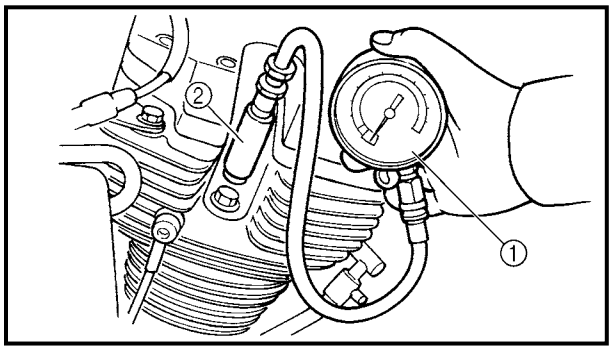

8. Install:
   - compression gauge ①
   - compression gauge adapter ②

Compression gauge
YU-33223
Compression gauge adapter
YU-33223-3

9. Measure:
   - compression pressure
     Out of specification → Refer to steps (c) and (d).

Compression pressure (at sea level)
Minimum
1,000 kPa (10 kg/cm², 142 psi)
Standard
1,200 kPa (12 kg/cm², 171 psi)
Maximum
1,400 kPa (14 kg/cm², 199 psi)

▼▼▼▼▼▼▼▼▼▼▼▼▼▼▼▼▼▼▼▼▼▼▼▼▼▼▼▼▼▼▼▼▼▼

a. Set the main switch to "ON".
b. With the throttle wide open, crank the engine until the reading on the compression gauge stabilizes.

⚠ WARNING

To prevent sparking, ground all spark plug leads before cranking the engine.

NOTE:
The difference in compression pressure between cylinders should not exceed 100 kPa (1 kg/cm², 14 psi).

c. If the compression pressure is above the maximum specification, check the cylinder head, valve surfaces, and piston crown for carbon deposits.
d. Carbon deposits → Eliminate.
e. If the compression pressure is below the minimum specification, squirt a few drops of oil into the cylinder and measure again.

Refer to the following table.

Compression pressure (with oil applied into the cylinder)	
Reading	**Diagnosis**
Higher than without oil	**Piston wear or damage → Repair.**
Same as without oil	**Piston rings, valves, cylinder head gasket, or piston possibly defective → Repair.**

▲▲▲▲▲▲▲▲▲▲▲▲▲▲▲▲▲▲▲▲▲▲▲▲▲▲▲▲

10. Install:
- spark plug

18 Nm (1.8 m · kg, 13 ft · lb)

11. Connect:
- spark plug cap

12. Remove:
- camshaft sprocket cover
  Refer to "ROCKER ARMS, PUSH RODS AND VALVE LIFTERS".

13. Install:
- decompression solenoid
  Refer to "CAMSHAFTS".
- camshaft sprocket cover
  Refer to "ROCKER ARMS, PUSH RODS AND VALVE LIFTERS".

14. Install:
- fuel tank
- rider seat
  Refer to "FUEL TANK" and "SEATS AND SIDE COVERS".

EAS00071
CHECKING THE ENGINE OIL LEVEL

1. Stand the motorcycle on a level surface.

NOTE:
- Place the motorcycle on a suitable stand.
- Make sure the motorcycle is upright.

2. Start the engine and warm it up by running the engine or letting the engine run at idle for 15 minutes until the engine oil inside of the oil tank has reached a temperature of 60 °C (140 °F) and then turn it off.

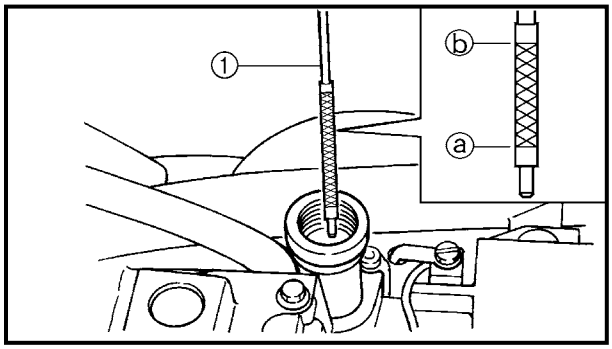

3. Remove:
   - rider seat
     Refer to "SEATS AND SIDE COVERS".
4. Remove:
   - dipstick ①
5. Check:
   - engine oil level
     The engine oil level should be between the minimum level mark ⓐ and maximum level mark ⓑ.
     Below the minimum level mark → Add the recommended engine oil to the proper level.

NOTE:
- Before checking the engine oil level, wait a few minutes until the oil has settled.
- Do not screw the dipstick in when insecting the oil level.

Recommended oil
Yamalube 4 (20W 40) or
SAE 20W40 type SE motor oil

CAUTION:
- **Engine oil also lubricates the clutch and the wrong oil types or additives could cause clutch slippage. Therefore, do not add any chemical additives.**
- **Do not allow foreign materials to enter the crankcase.**

NOTE:
API Service "SE", "SF" and "SG" type or equivalent (e.g., "SF-SE", "SF-SE-CC", "SF-SE-SD").

6. Install:
   - dipstick

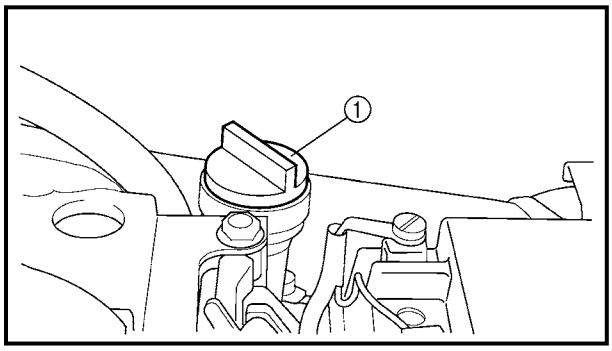

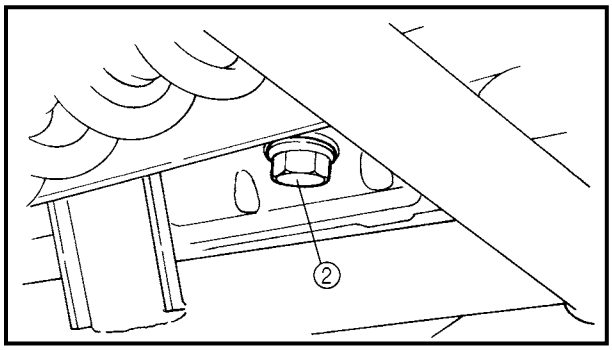

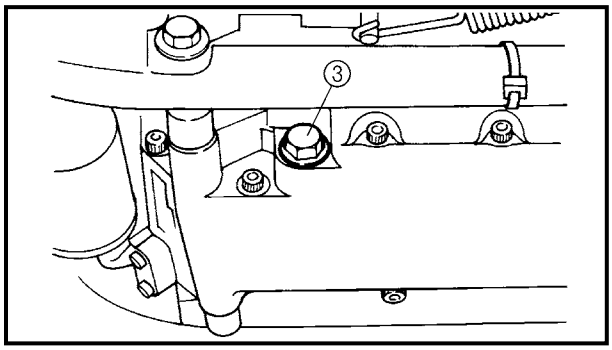

EAS00073

CHANGING THE ENGINE OIL

1. Start the engine, warm it up for several minutes, and then turn it off.
2. Place a container under the engine oil drain bolt.
3. Remove:
   - dipstick ①
   - engine oil drain bolt (oil tank) ②
   - engine oil drain bolt (engine) ③
4. Drain:
   - engine oil
     (completely from the oil tank and crankcase)

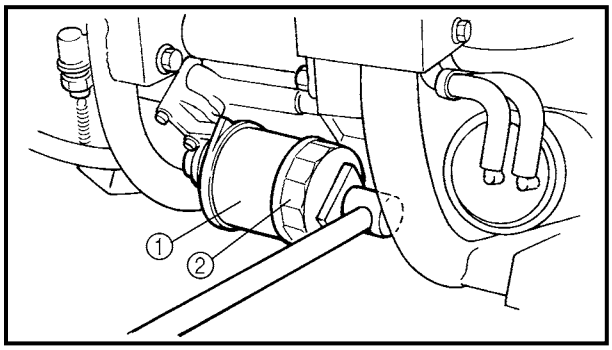

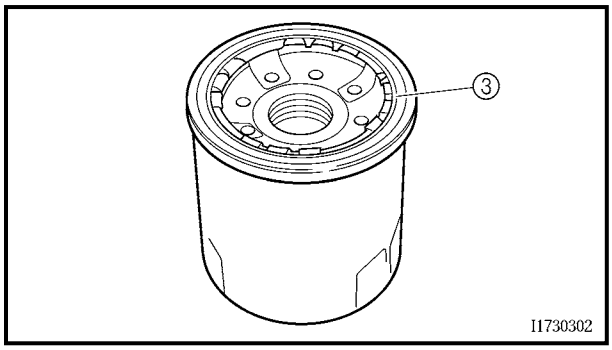

5. If the oil filter cartridge is also to be replaced, perform the following procedure.

▼▼▼▼▼▼▼▼▼▼▼▼▼▼▼▼▼▼▼▼▼▼▼▼▼▼▼▼▼▼

a. Remove the oil filter cartridge ① with an oil filter wrench ②.

	Oil filter wrench **YU-38411**

b. Lubricate the O-ring ③ of the new oil filter cartridge with a thin coat of engine oil.

CAUTION:

Make sure the O-ring ③ is positioned correctly in the groove of the oil filter cartridge.

c. Tighten the new oil filter cartridge to specification with an oil filter wrench.

	Oil filter cartridge **17 Nm (1.7 m • kg, 12 ft • lb)**

▲▲▲▲▲▲▲▲▲▲▲▲▲▲▲▲▲▲▲▲▲▲▲▲▲▲▲▲▲▲

6. Check:
   - engine oil drain bolt gasket
     Damage → Replace.
7. Install:
   - engine oil drain bolt

	43 Nm (4.3 m · kg, 31 ft · lb)

8. Fill:
   - oil tank
     (with the specified amount of the recommended engine oil)

	Quantity **Total amount** **5.0 L (4.4 Imp qt, 5.3 US qt)** **Periodic oil replacement** **3.7 L (3.3 Imp qt, 3.9 US qt)** **With oil filter cartridge replacement** **4.1 L (3.6 Imp qt, 4.3 US qt)**

NOTE:

- Pour the engine oil in several stages.
- First, pour in 2.5 L (2.2 Imp qt, 2.6 US qt) of oil, and then start the engine and rev it 3 to 5 times. Stop the engine, and then pour in the remainder of the specified amount.

CAUTION:

When starting the engine make sure the dipstick is securely fitted into the oil tank.

9. Fill: (when the engine is disassembled)
   - crankcase and oil tank

	Quantity **Total amount** **5.0 L (4.4 Imp qt, 5.3 US qt)** **Oil tank** **2.0 L (1.8 Imp qt, 2.1 US qt)** **Crankcase** **3.0 L (2.6 Imp qt, 3.2 US qt)**

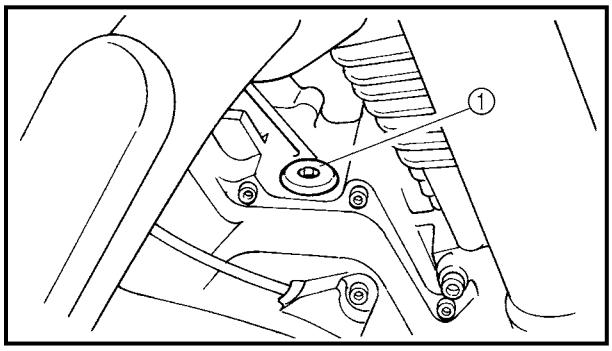

NOTE:
After the engine has been disassembled, pour the specified amount of engine oil into the crankcase and the oil tank. When pouring engine oil into the crankcase, pour it into the hole of the removed bolt ①.

10. Install:
- dipstick

11. Start the engine, warm it up for several minutes, and then turn it off.
12. Check:
- engine
  (for engine oil leaks)

13. Check:
- engine oil level
  Refer to "CHECKING THE ENGINE OIL LEVEL".

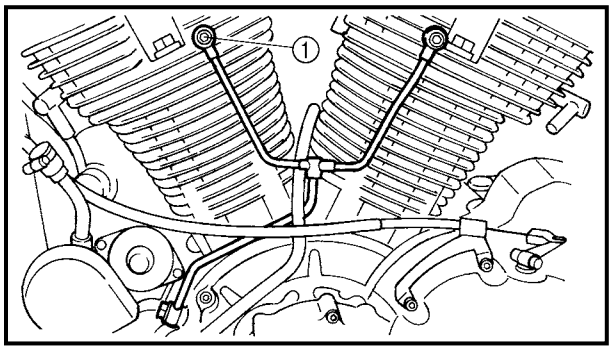

14. Check:
- engine oil pressure

▼▼▼▼▼▼▼▼▼▼▼▼▼▼▼▼▼▼▼▼▼▼▼▼▼▼▼▼▼▼▼▼

a. Slightly loosen the oil gallery bolt ①.
b. Start the engine and keep it idling until engine oil starts to seep from the oil gallery bolt. If no engine oil comes out after one minute, turn the engine off so that it will not seize.
c. Check the engine oil passages, the oil filter cartridge and the oil pump for damage or leakage. Refer to "ENGINE OIL PUMP" in chapter 5.
d. Start the engine after solving the problem(s) and check the engine oil pressure again.
e. Tighten the oil gallery bolt to specification.

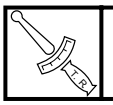	**Oil gallery bolt** **21 Nm (2.1 m • kg, 15 ft • lb)**

▲▲▲▲▲▲▲▲▲▲▲▲▲▲▲▲▲▲▲▲▲▲▲▲▲▲▲▲▲▲▲▲

EAS00077
MEASURING THE ENGINE OIL PRESSURE

1. Check:
   - engine oil level
     Refer to "CHECKING THE ENGINE OIL LEVEL".
2. Start the engine, warm it up for several minutes, and then turn it off.

CAUTION:

When the engine is cold, the engine oil will have a higher viscosity, causing the engine oil pressure to increase. Therefore, be sure to measure the engine oil pressure after warming up the engine.

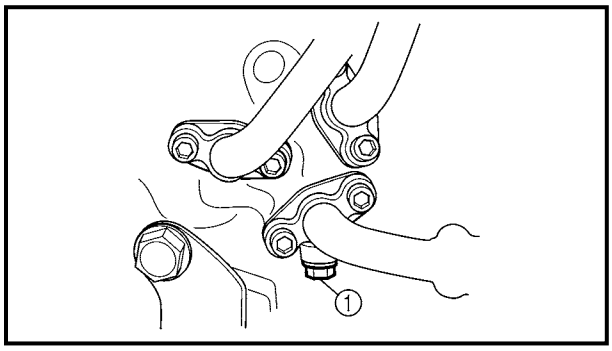

3. Remove:
   - oil gallery bolt ①

⚠ WARNING

The engine, muffler and engine oil are extremely hot.

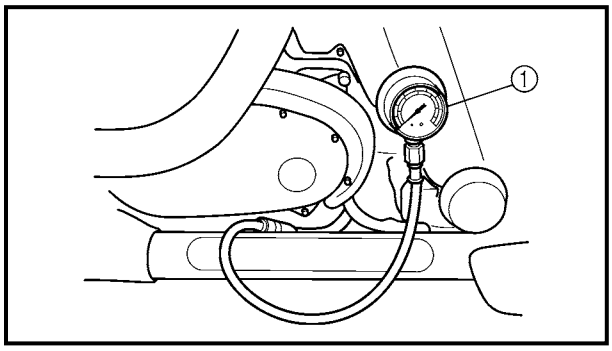

4. Install:
   - oil pressure gauge ①

	Oil pressure gauge **90890-03153**

5. Measure:
   - engine oil pressure
     (at the following conditions)

	Engine oil pressure **0.4 ~ 0.8 kPa (0.004 ~ 0.008 kg/cm^2, 0.057 ~ 0.114 psi)** **Engine speed** **Approx. 900 r/min** **Engine oil temperature** **60 ˚C (140 ˚F)**

Out of specification → Adjust.

Engine oil pressure	Possible causes
Below specification	**• Faulty oil pump • Clogged oil filter • Leaking oil passage**
Broken or damaged oil seal Above specification	**• Leaking oil passage • Faulty oil filter • Oil viscosity too high**

6. Install:
   - oil gallery bolt

20 Nm (2.0 m · kg, 14 ft · lb)

CHECKING THE TRANSFER GEAR OIL LEVEL

1. Stand the motorcycle on a level surface.

NOTE:
- Place the motorcycle on a suitable stand.
- Make sure the motorcycle is upright.

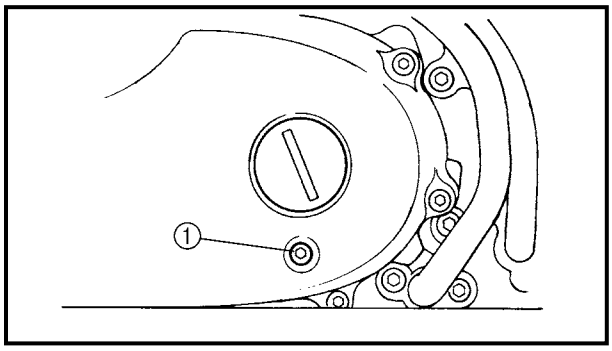

2. Remove:
   - checking bolt ①

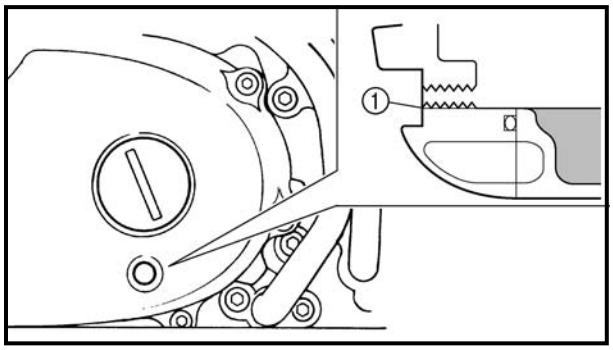

3. Check:
   - transfer gear oil level
     The transfer gear oil level should be up to the brim ① of the hole.
     Below the brim → Add the recommended transfer gear oil to the proper level.

Recommended oil
SAE80API "GL-4" Hypoid gear oil

CAUTION:

Do not allow foreign materials to enter the transfer case.

4. Install:
   - checking bolt

	8 Nm (0.8 m · kg, 5.8 ft · lb)

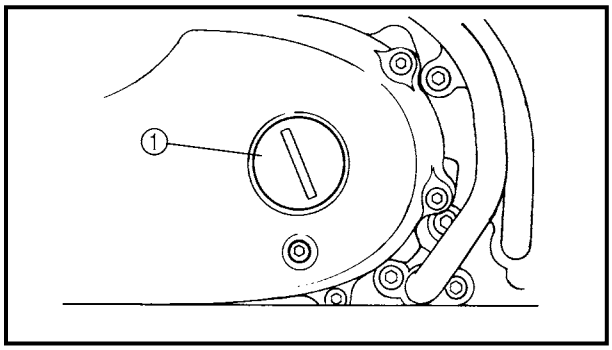

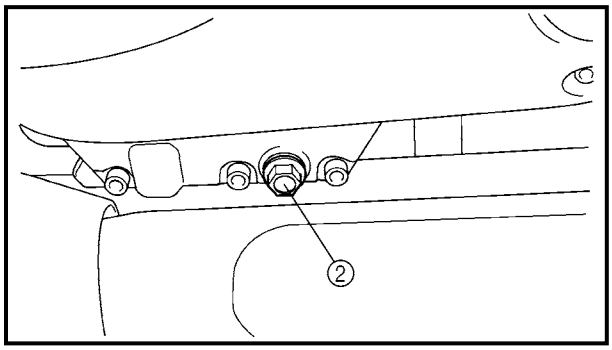

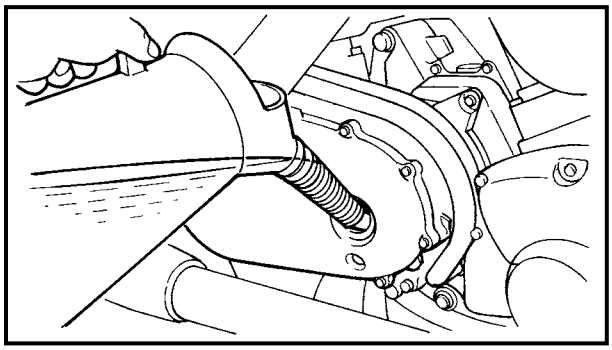

CHANGING THE TRANSFER GEAR OIL

1. Place a container under the transfer gear oil drain bolt.
2. Remove:
   - straight plug ①
   - transfer gear oil drain bolt ②
3. Drain:
   - transfer gear oil
     (completely from the transfer gear case)
4. Check:
   - transfer gear oil drain bolt gasket
     Damage → Replace.
5. Install:
   - transfer gear oil drain bolt

	18 Nm (1.8 m · kg, 13 ft · lb)

6. Fill:
   - transfer gear case
     (with the specified amount of the recommended transfer gear oil)

	Quantity **Total amount** **0.4 L (0.35 Imp qt, 0.42 US qt)**

7. Install:
   - straight plug
8. Check:
   - transfer gear oil level
     Refer to “CHECKING THE TRANSFER GEAR OIL LEVEL”.

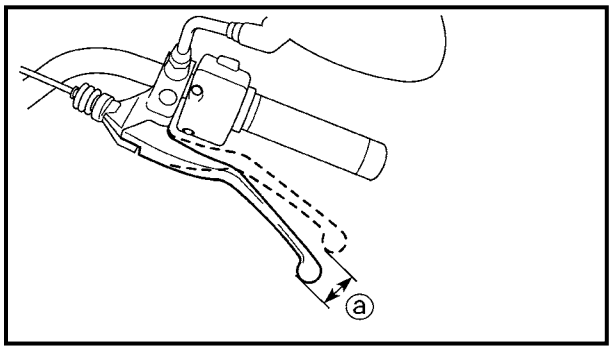

EAS00078

ADJUSTING THE CLUTCH CABLE FREE PLAY

1. Measure:
   - clutch cable free play ⓐ
     Out of specification → Adjust.

	Clutch cable free play (at the end of the clutch lever) **10 ~ 15 mm (0.39 ~ 0.59 in)**

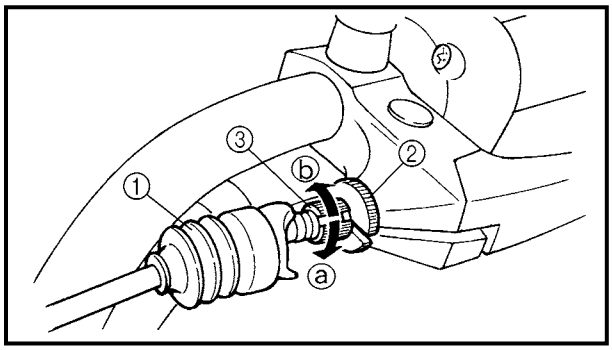

2. Adjust:
   - clutch cable free play

▼▼▼▼▼▼▼▼▼▼▼▼▼▼▼▼▼▼▼▼▼▼▼▼▼▼▼▼▼▼▼▼

Handlebar side

a. Pull the boot ① off.

b. Loosen the locknut ②.

c. Turn the adjusting bolt ③ in direction ⓐ or ⓑ until the specified clutch cable free play is obtained.

Direction ⓐ	**Clutch cable free play is increased.**
Direction ⓑ	**Clutch cable free play is decreased.**

d. Tighten the locknut.

NOTE:

If the specified clutch cable free play cannot be obtained on the handlebar side of the cable, use the adjusting nut on the engine side.

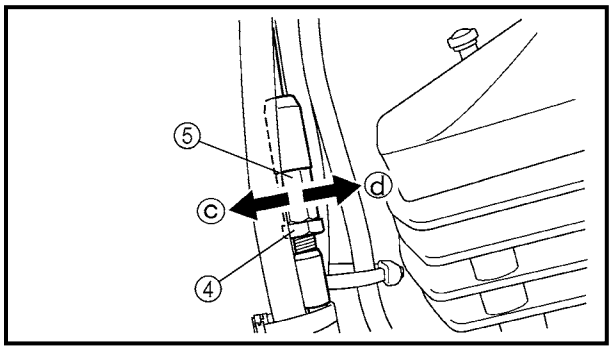

e. Pull the boot ① in.

Engine side

a. Loosen the locknut ④.

b. Turn the adjusting bolt ⑤ in direction ⓒ or ⓓ until the specified clutch cable free play is obtained.

Direction ⓒ	**Clutch cable free play is increased.**
Direction ⓓ	**Clutch cable free play is decreased.**

c. Tighten the locknut.

▲▲▲▲▲▲▲▲▲▲▲▲▲▲▲▲▲▲▲▲▲▲▲▲▲▲▲▲▲▲▲▲

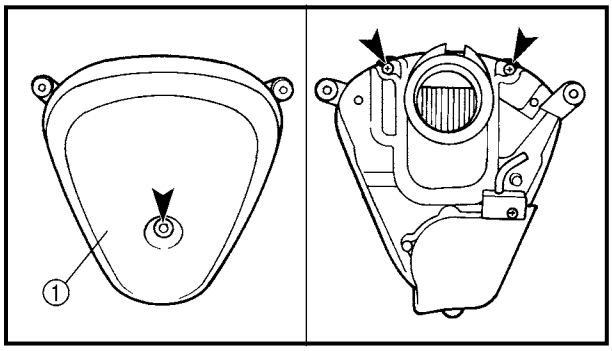

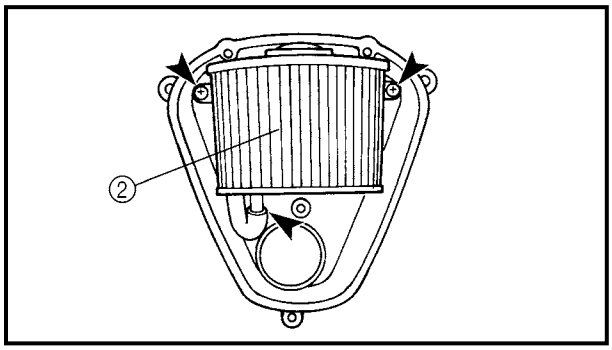

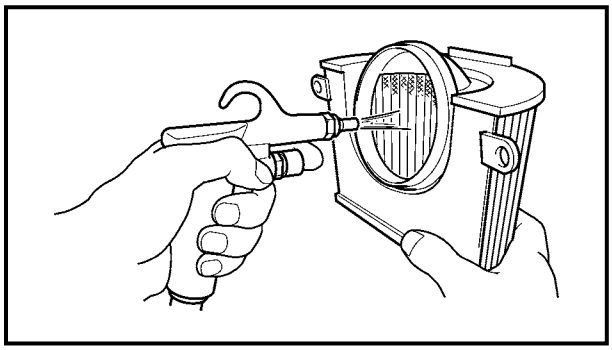

EAS00086

CLEANING THE AIR FILTER ELEMENT

1. Remove:
   - air filter case
     Refer to "AIR FILTER CASE".
2. Remove:
   - air filter case cover ①
   - air filter element ②
3. Clean:
   - air filter element
     Apply compressed air to the outer surface of the air filter element.
4. Check:
   - air filter element
     Damage → Replace.
   - O-ring
     Damage → Replace.
5. Install:
   - air filter element
   - air filter case cover

CAUTION:

Never operate the engine without the air filter element installed. Unfiltered air will cause rapid wear of engine parts and may damage the engine. Operating the engine without the air filter element will also affect the carburetor tuning, leading to poor engine performance and possible overheating.

NOTE:

When installing the air filter element into the air filter case cover, make sure their sealing surfaces are aligned to prevent any air leaks.

6. Install:
   - air filter case
     Refer to "AIR FILTER CASE".

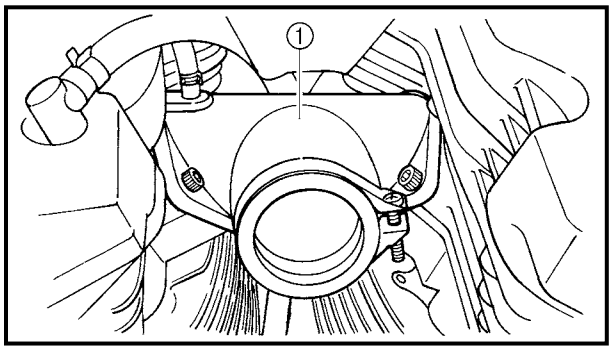

EAS00094
CHECKING THE CARBURETOR JOINT

1. Remove:
   - carburetor assembly
     Refer to "CARBURETOR" in chapter 6.
2. Check:
   - carburetor joint ①
     Cracks/damage → Replace.
     Refer to "CARBURETOR" in chapter 6.
3. Install:
   - carburetor assembly
     Refer to "CARBURETOR" in chapter 6.

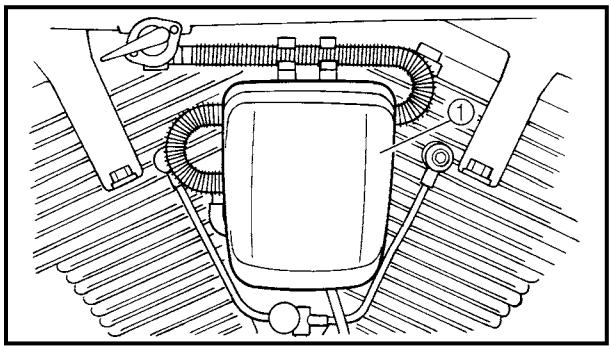

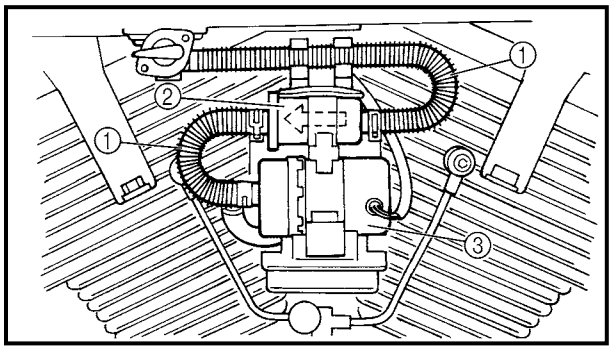

EAS00097
CHECKING THE FUEL HOSES AND FUEL FILTER

The following procedure applies to all of the fuel hoses.

1. Remove:
   - fuel pump cover ①
2. Check:
   - fuel hose ①
     Cracks/damage → Replace.
   - fuel filter ②
     Contaminants/damage → Replace.

NOTE:
- Drain and flush the fuel tank if abrasive damage to any components of the fuel line is evident.
- The arrow mark on the fuel filter must point towards the fuel pump ③ as shown.

3. Install:
   - fuel pump cover

EAS00098
CHECKING THE CYLINDER HEAD BREATHER HOSE AND TRANSFER GEAR CASE BREATHER HOSE

1. Remove:
   - rider seat
   - fuel tank
     Refer to "SEATS AND SIDE COVERS" and "FUEL TANK".

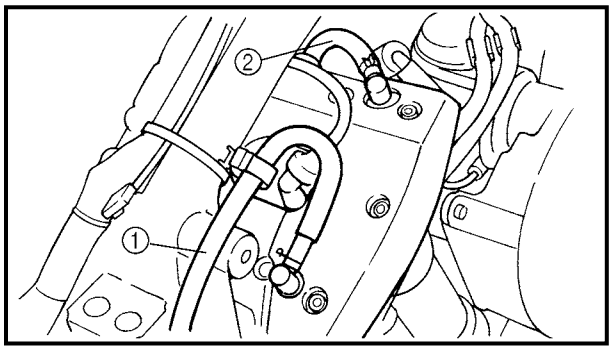

2. Check:
   - oil pump breather hose ①
   - cylinder head breather hose ②
     Cracks/damage → Replace.
     Loose connection → Connect properly.

CAUTION:

Make sure the crankcase breather hose is routed correctly.

3. Install:
   - fuel tank
   - rider seat
     Refer to "FUEL TANK" and "SEATS AND SIDE COVERS".

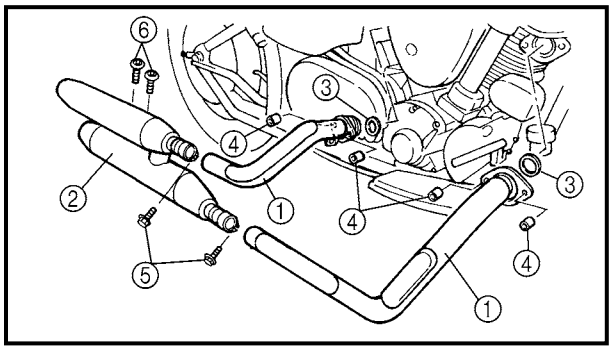

EAS00100
CHECKING THE EXHAUST SYSTEM

The following procedure applies to all of the exhaust pipes, mufflers and gaskets.

1. Check:
   - exhaust pipe ①
   - muffler ②
     Cracks/damage → Replace.
   - gasket ③
     Exhaust gas leaks → Replace.
2. Measure:
   - tightening torque

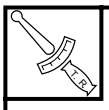

Exhaust pipe nut ④
20 Nm (2.0 m • kg, 14 ft • lb)
Exhaust pipe and muffler bolt ⑤
25 Nm (2.5 m • kg, 18 ft • lb)
Muffler and muffler bracket bolt ⑥
30 Nm (3.0 m • kg, 22 ft • lb)

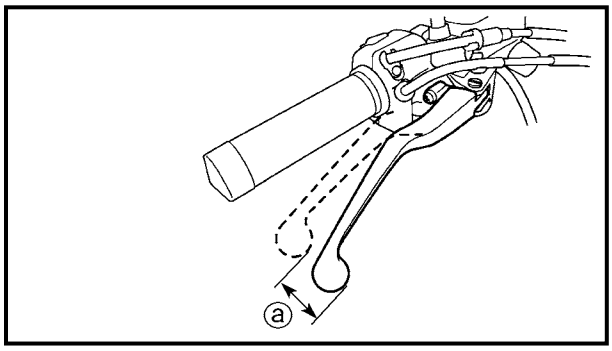

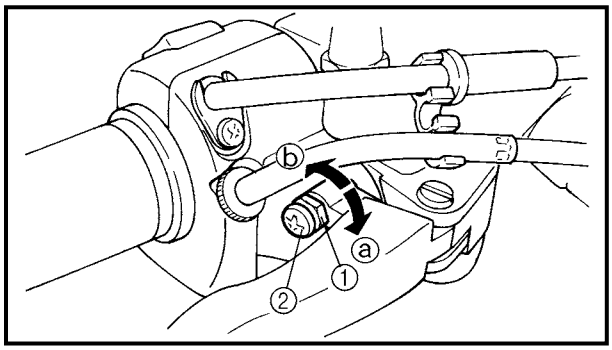

EAS00108
CHASSIS

ADJUSTING THE FRONT BRAKE

1. Measure:
   - brake lever free play ⓐ
     Out of specification → Adjust.

Brake lever free play (at the end of the brake lever)	**2 ~ 5 mm (0.08 ~ 0.20 in)**

2. Adjust:
   - brake lever free play

▼▼▼▼▼▼▼▼▼▼▼▼▼▼▼▼▼▼▼▼▼▼▼▼▼▼▼▼▼▼▼▼

a. Loosen the locknut ①.

b. Turn the adjusting screw ② in direction ⓐ or ⓑ until the specified brake lever free play is obtained.

Direction ⓐ	**Brake lever free play is increased.**
Direction ⓑ	**Brake lever free play is decreased.**

c. Tighten the locknut.

⚠ WARNING

A soft or spongy feeling in the brake lever can indicate the presence of air in the brake system. Before the vehicle is operated, the air must be removed by bleeding the brake system. Air in the brake system will considerably reduce braking performance and could result in loss of control and possibly an accident. Therefore, check and, if necessary, bleed the brake system.

CAUTION:

After adjusting the brake lever free play, make sure there is no brake drag.

▲▲▲▲▲▲▲▲▲▲▲▲▲▲▲▲▲▲▲▲▲▲▲▲▲▲▲▲▲▲▲▲

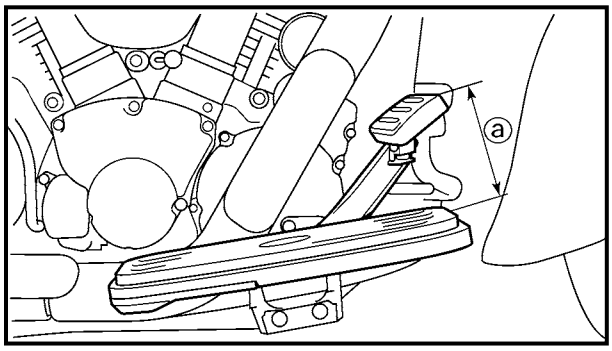

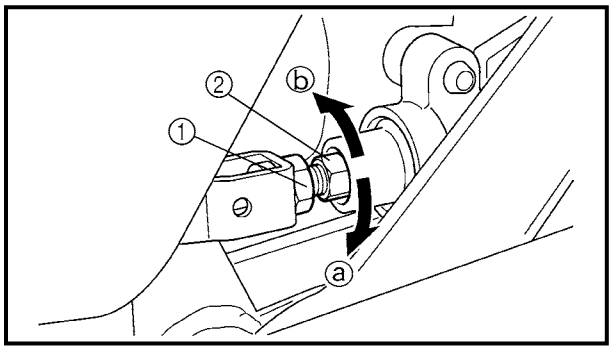

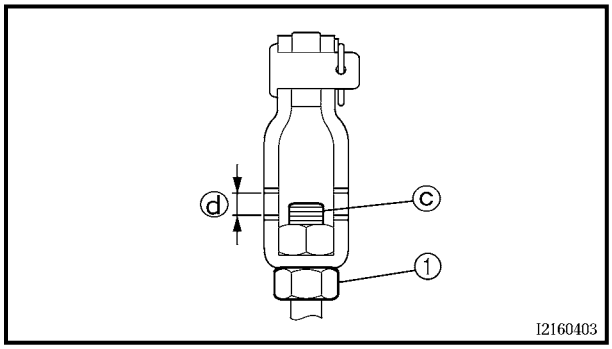

EAS00110

ADJUSTING THE REAR BRAKE

1. Measure:
   - brake pedal position
     (distance ⓐ from the top of the rider footrest to the top of the brake pedal)
     Out of specification → Adjust.

	Brake pedal position (below the top of the rider footrest) **100 mm (3.9 in)**

2. Adjust:
   - brake pedal position

▼▼▼▼▼▼▼▼▼▼▼▼▼▼▼▼▼▼▼▼▼▼▼▼▼▼▼▼▼▼

a. Loosen the locknut ①.

b. Turn the adjusting bolt ② in direction ⓐ or ⓑ until the specified brake pedal position is obtained.

Direction ⓐ	**Brake pedal is raised.**
Direction ⓑ	**Brake pedal is lowered.**

⚠ WARNING

After adjusting the brake pedal position, check that the end ⓒ of the adjusting bolt is visible through the hole ⓓ.

c. Tighten the locknut ① to specification.

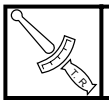	**Locknut** **18 Nm (1.8 m • kg, 13 ft • lb)**

⚠ WARNING

A soft or spongy feeling in the brake pedal can indicate the presence of air in the brake system. Before the vehicle is operated, the air must be removed by bleeding the brake system. Air in the brake system will considerably reduce braking performance and could result in loss of control and possibly an accident. Therefore, check and, if necessary, bleed the brake system.

CAUTION:

After adjusting the brake pedal position, make sure there is no brake drag.

▲▲▲▲▲▲▲▲▲▲▲▲▲▲▲▲▲▲▲▲▲▲▲▲▲▲▲▲▲▲

3. Adjust:
   - rear brake light switch
     Refer to "ADJUSTING THE REAR BRAKE LIGHT SWITCH".

EAS00115
CHECKING THE BRAKE FLUID LEVEL

1. Stand the motorcycle on a level surface.

NOTE:
- Place the motorcycle on a suitable stand.
- Make sure the motorcycle is upright.

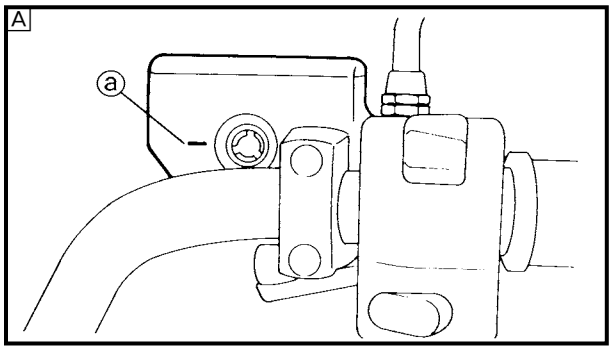

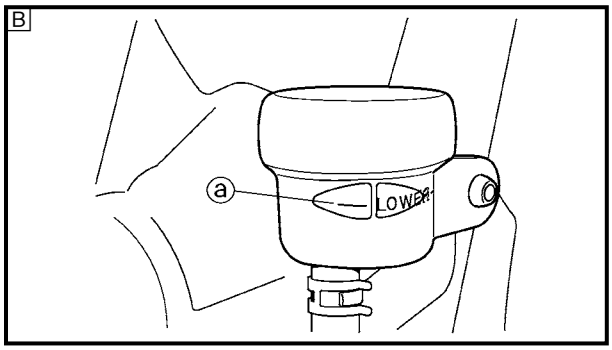

2. Check:
   - brake fluid level
     Below the minimum level mark ⓐ → Add the recommended brake fluid to the proper level.

Recommended brake fluid
DOT 4

A Front brake
B Rear brake

⚠ WARNING
- **Use only the designated brake fluid. Other brake fluids may cause the rubber seals to deteriorate, causing leakage and poor brake performance.**
- **Refill with the same type of brake fluid that is already in the system. Mixing brake fluids may result in a harmful chemical reaction, leading to poor brake performance.**
- **When refilling, be careful that water does not enter the brake fluid reservoir. Water will significantly lower the boiling point of the brake fluid and could cause vapor lock.**

CAUTION:
Brake fluid may damage painted surfaces and plastic parts. Therefore, always clean up any spilt brake fluid immediately.

NOTE:
In order to ensure a correct reading of the brake fluid level, make sure the top of the brake fluid reservoir is horizontal.

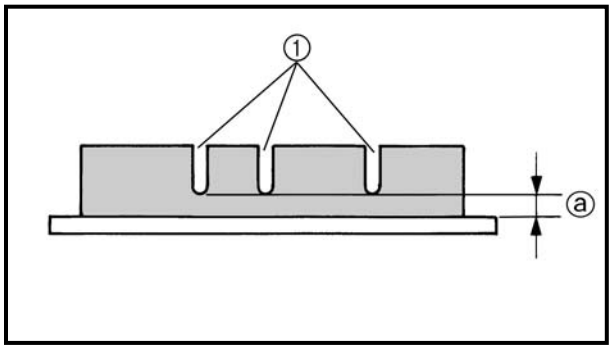

EAS00120
CHECKING THE FRONT BRAKE PADS

The following procedure applies to all of the brake pads.

1. Operate the brake.
2. Check:
   - brake pad
     Wear indicator groove ① almost disappeared → Replace the brake pads as a set.
     Refer to "REPLACING THE FRONT BRAKE PADS" in chapter 4.

Brake pad wear limit ⓐ
0.5 mm (0.02 in)

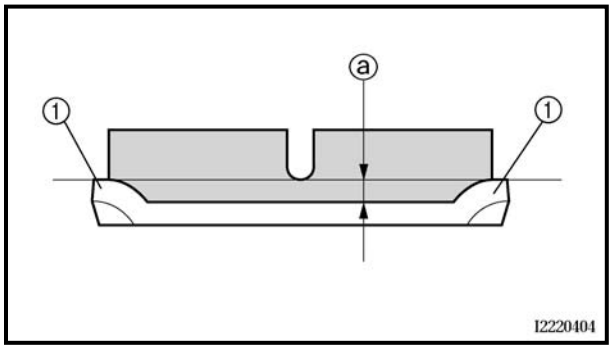

EAS00118
CHECKING THE REAR BRAKE PADS

The following procedure applies to all of the brake pads.

1. Operate the brake.
2. Check:
   - brake pad
     Wear indicators ① almost touch the brake disc → Replace the brake pads as a set.
     Refer to "REPLACING THE REAR BRAKE PADS" in chapter 4.

Brake pad wear limit ⓐ
0.5 mm (0.02 in)

EAS00128
ADJUSTING THE REAR BRAKE LIGHT SWITCH

NOTE:

The rear brake light switch is operated by movement of the brake pedal.
The rear brake light switch is properly adjusted when the brake light comes on just before the braking effect starts.

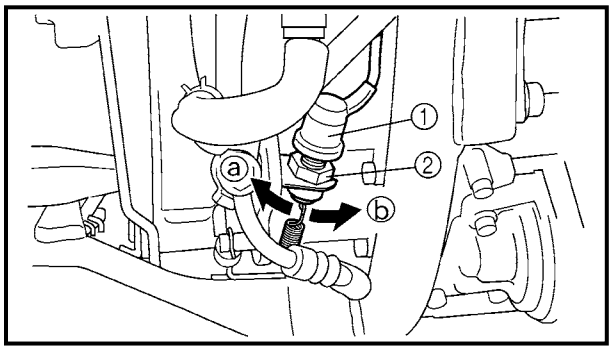

1. Check:
   - rear brake light operation timing
     Incorrect → Adjust.
2. Adjust:
   - rear brake light operation timing

▼▼▼▼▼▼▼▼▼▼▼▼▼▼▼▼▼▼▼▼▼▼▼▼▼▼▼▼▼▼▼▼

a. Hold the main body ① of the rear brake light switch so that it does not rotate and turn the adjusting nut ② in direction ⓐ or ⓑ until the rear brake light comes on at the proper time.

Direction ⓐ	**Brake light comes on sooner.**
Direction ⓑ	**Brake light comes on later.**

▲▲▲▲▲▲▲▲▲▲▲▲▲▲▲▲▲▲▲▲▲▲▲▲▲▲▲▲▲▲▲▲

3

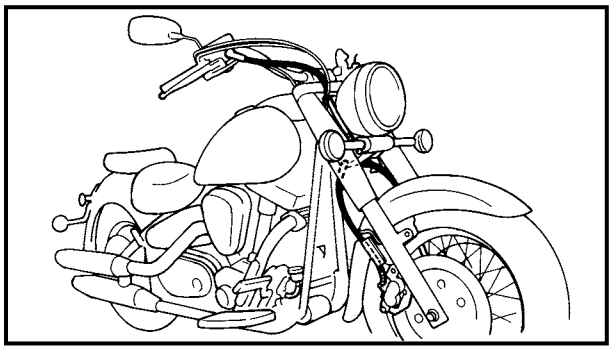

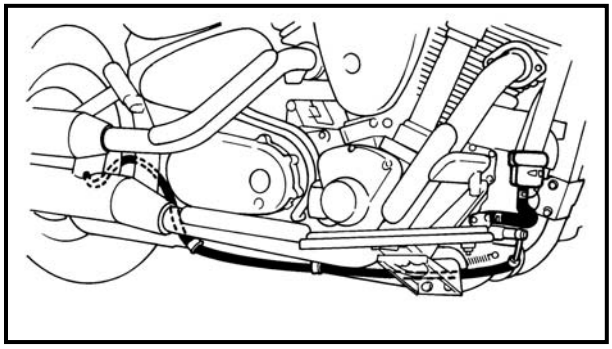

EAS00129

CHECKING THE BRAKE HOSE

1. Check:
   - brake hose
     Cracks/damage/wear → Replace.
2. Check:
   - brake hose clamp
     Loose → Tighten the clamp bolt.
3. Hold the motorcycle upright and apply the front or rear brake several times.
4. Check:
   - brake hose
     Brake fluid leakage → Replace the damaged hose.
     Refer to “FRONT AND REAR BRAKES” in chapter 4.

EAS00134
BLEEDING THE HYDRAULIC BRAKE SYSTEM

WARNING

Bleed the hydraulic brake system whenever:
- **the brake system was disassembled,**
- **a brake hose was loosened, disconnected, or replaced,**
- **the brake fluid level is very low,**
- **brake operation is faulty.**

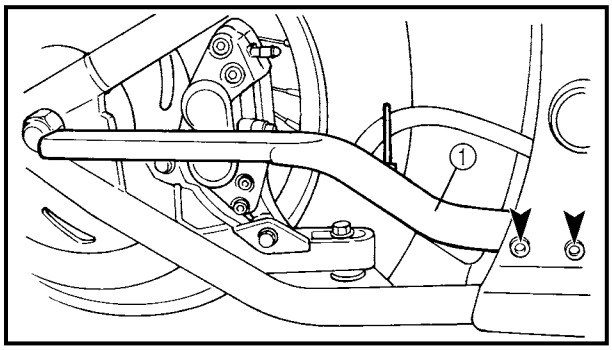

1. Remove:
   - muffler
   - muffler bracket ①

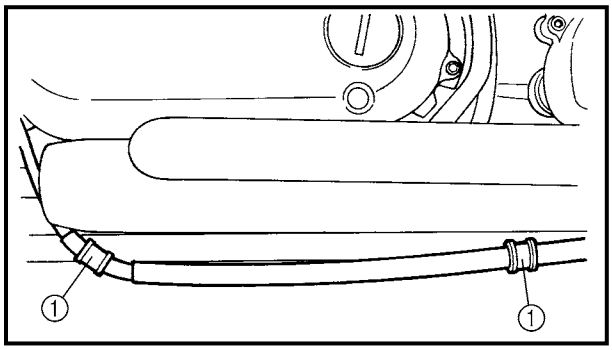

2. Remove:
   - plastic clamps ①

NOTE:
- Be careful not to spill any brake fluid or allow the brake master cylinder reservoir or brake fluid reservoir to overflow.
- When bleeding the hydraulic brake system, make sure there is always enough brake fluid before applying the brake. Ignoring this precaution could allow air to enter the hydraulic brake system, considerably lengthening the bleeding procedure.
- If bleeding is difficult, it may be necessary to let the brake fluid settle for a few hours. Repeat the bleeding procedure when the tiny bubbles in the hose have disappeared.

3. Bleed:
   - hydraulic brake system

▼▼▼▼▼▼▼▼▼▼▼▼▼▼▼▼▼▼▼▼▼▼▼▼▼▼▼▼▼▼▼▼▼▼

a. Fill the brake fluid reservoir to the proper level with the recommended brake fluid.

b. Install the diaphragm (brake master cylinder reservoir or brake fluid reservoir).

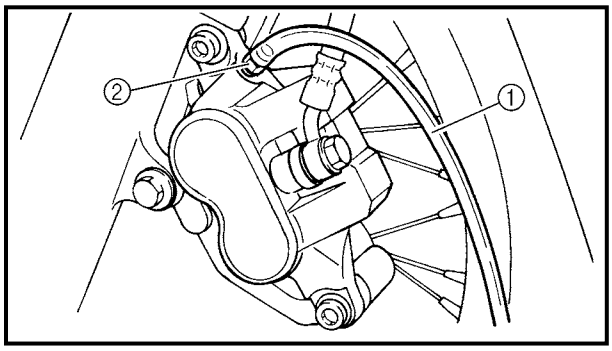

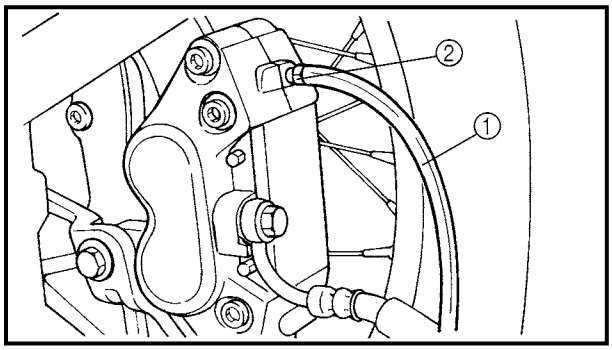

c. Connect a clear plastic hose ① tightly to the bleed screw ②.

Ⓐ Front Ⓑ Rear

d. Place the other end of the hose into a container.

e. Slowly apply the brake several times.

f. Fully squeeze the brake lever or fully depress the brake pedal and hold it in position.

g. Loosen the bleed screw.

NOTE:

Loosening the bleed screw will release the pressure and cause the brake lever to contact the throttle grip or the brake pedal to fully extend.

h. Tighten the bleed screw and then release the brake lever or brake pedal.

i. Repeat steps (e) to (h) until all of the air bubbles have disappeared from the brake fluid in the plastic hose.

j. Tighten the bleed screw to specification.

	Bleed screw **6 Nm (0.6 m • kg, 4.3 ft • lb)**

k. Fill the brake fluid reservoir to the proper level with the recommended brake fluid.

Refer to "CHECKING THE BRAKE FLUID LEVEL".

⚠ WARNING

After bleeding the hydraulic brake system, check the brake operation.

▲▲▲▲▲▲▲▲▲▲▲▲▲▲▲▲▲▲▲▲▲▲▲▲▲▲▲▲▲▲

4. Install:
   - plastic clamps
   - muffler bracket

     26 Nm (2.6 m · kg, 19 ft · lb)
   - muffler
5. Tighten:
   - muffler bolts

     30 Nm (3.0 m · kg, 22 ft · lb)
   - muffler clamp bolts

     25 Nm (2.5 m · kg, 18 ft · lb)

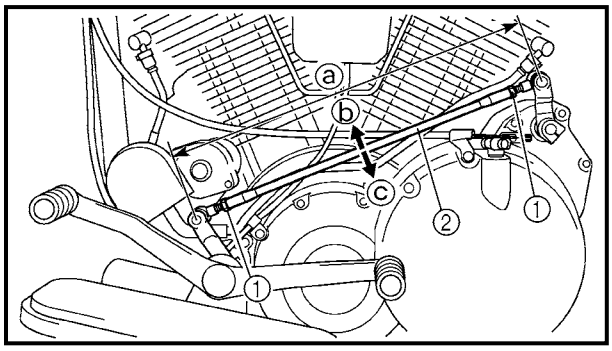

EAS00137
ADJUSTING THE SHIFT PEDAL

NOTE:
The shift pedal position is determined by the installed shift rod length ⓐ.

1. Measure:
   - installed shift rod length ⓐ
     Incorrect → Adjust.

Installed shift rod length
374.4 ~ 378.4 mm
(14.74 ~ 14.90 in)

2. Adjust:
   - installed shift rod length ⓐ

▼▼▼▼▼▼▼▼▼▼▼▼▼▼▼▼▼▼▼▼▼▼▼▼▼▼▼▼▼▼▼▼

a. Loosen both locknuts ①.
b. Turn the shift rod ② in direction ⓑ or ⓒ to obtain the correct shift pedal position.

Direction ⓑ	**Installed shift rod length increases.**
Direction ⓒ	**Installed shift rod length decreases.**

c. Tighten both locknuts.
d. Make sure the installed shift rod length is within specification.

▲▲▲▲▲▲▲▲▲▲▲▲▲▲▲▲▲▲▲▲▲▲▲▲▲▲▲▲▲▲▲▲

ADJUSTING THE DRIVE BELT SLACK

CAUTION:
A drive belt that is too tight will overload the engine and other vital parts, and one that is too loose can skip and damage the swingarm or cause an accident. Therefore, keep the drive belt slack within the specified limits.

NOTE:
Measure the drive belt slack when the engine is cold, and when the drive belt is dry.

1. Stand the motorcycle on a level surface.

WARNING

Securely support the motorcycle so that there is no danger of it falling over.

NOTE:
Place the motorcycle on the sidestand and or on a suitable stand so that the rear wheel is elevated.

2. Rotate the rear wheel several times and check the drive belt to locate its tightest point.

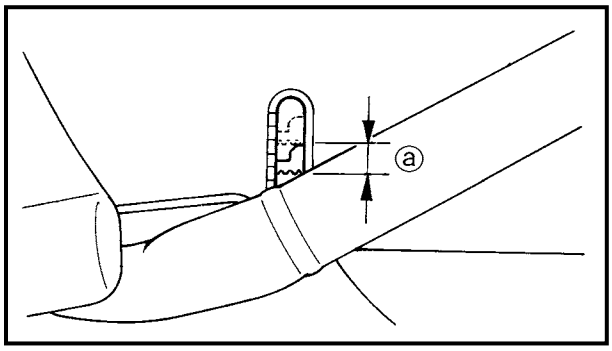

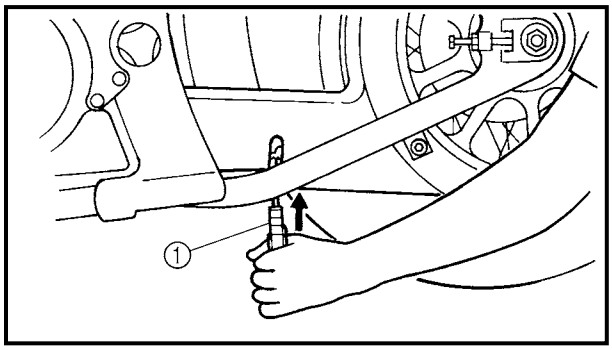

3. Measure:
   - drive belt slack ⓐ
     Out of specification → Adjust.

Drive belt slack
On the sidestand
7.5 ~ 13 mm at 4.5 kg
(0.30 ~ 0.51 in at 10 lbs)
On a suitable stand
14 ~ 21 mm at 4.5 kg
(0.55 ~ 0.83 in at 10 lbs)

Belt tension gauge
YM-03170

NOTE:
- The level marks of the level window on the lower drive belt cover are in units of 5 mm (0.20 in). Use them as a standard for measuring the drive belt slack.
- Measure the drive belt slack when the drive belt has been pushed with 4.5 kg (10 lbs) of pressure using a belt tension gauge ①.

4. Adjust:
   - drive belt slack

▼▼▼▼▼▼▼▼▼▼▼▼▼▼▼▼▼▼▼▼▼▼▼▼▼▼▼▼▼▼▼▼

NOTE:
Place the motorcycle on the suitable stand so that the rear wheel is elevated.

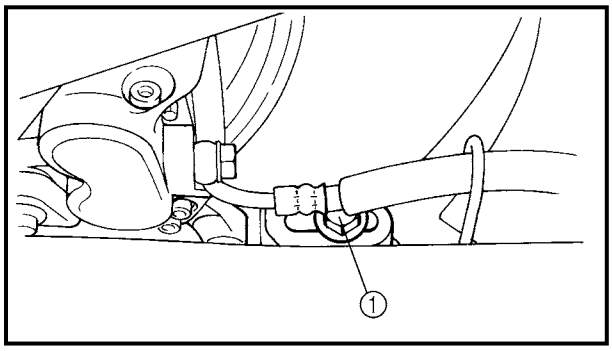

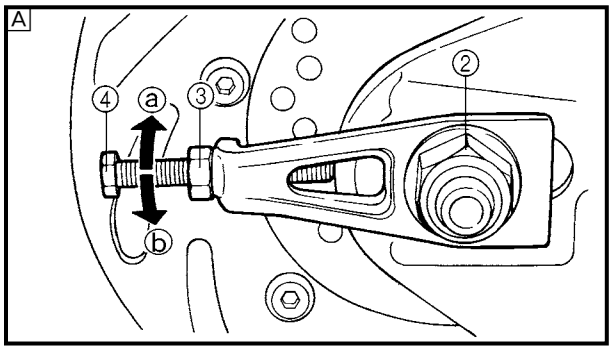

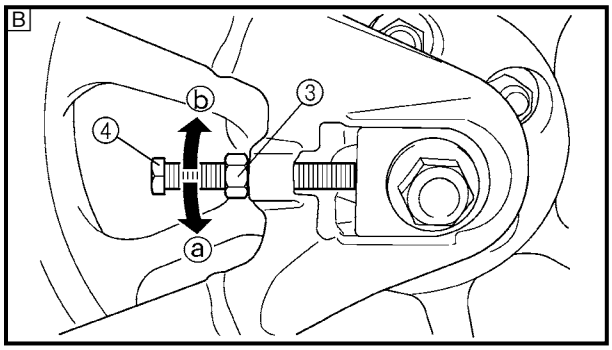

a. Loosen the brake caliper bracket bolt ①.

b. Loosen the wheel axle nut ②.

c. Loosen both locknuts ③.

A Right B Left

d. Turn both adjusting bolts ④ in direction ⓐ or ⓑ until the specified drive chain slack is obtained.

Direction ⓐ	**Drive belt slack is reduced.**
Direction ⓑ	**Drive belt slack is increased.**

NOTE:

To maintain the proper wheel alignment, adjust both sides evenly.

e. Tighten both locknuts to specification.

	Locknut **32 Nm (3.2 m • kg, 23 ft • lb)**

f. Tighten the wheel axle nut to specification.

	Wheel axle nut **150 Nm (15.0 m • kg, 110 ft • lb)**

g. Tighten the brake caliper bracket bolt to specification.

	Brake caliper bracket bolt **40 Nm (4.0 m • kg, 29 ft • lb)**

▲▲▲▲▲▲▲▲▲▲▲▲▲▲▲▲▲▲▲▲▲▲▲▲▲▲▲▲

EAS00146

CHECKING AND ADJUSTING THE STEERING HEAD

1. Stand the motorcycle on a level surface.

⚠ WARNING

Securely support the motorcycle so that there is no danger of it falling over.

NOTE:

Place the motorcycle on a suitable stand so that the front wheel is elevated.

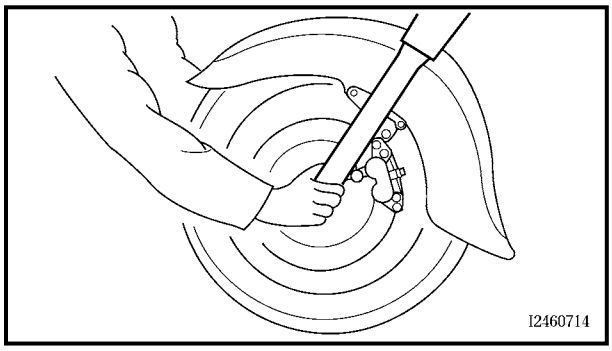

2. Check:
   - steering head
     Grasp the bottom of the front fork legs and gently rock the front fork.
     Binding/looseness → Adjust the steering head.
3. Remove:
   - meter assembly
     Refer to "FUEL TANK".

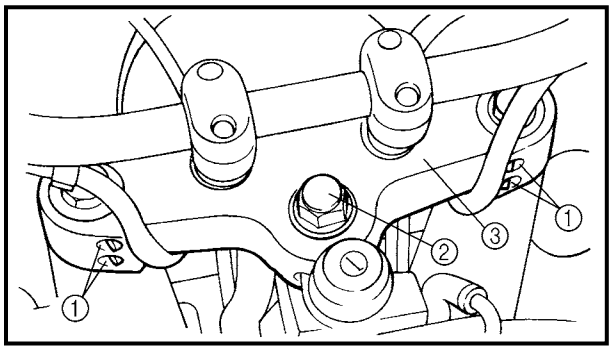

4. Loosen:
   - upper bracket pinch bolts ①
5. Remove:
   - steering stem nut ②
   - washer
   - upper bracket ③

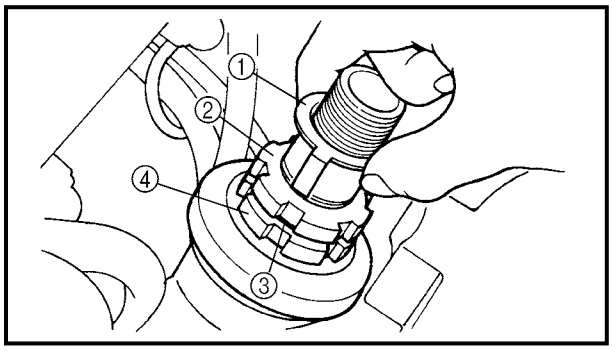

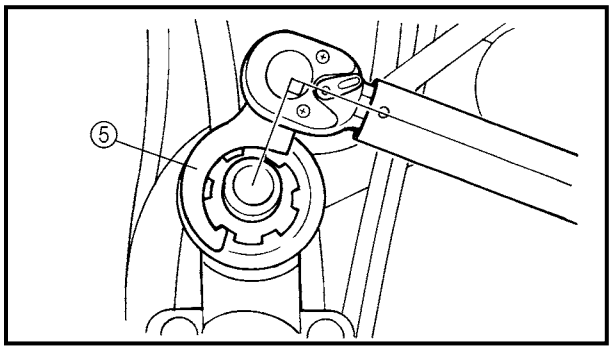

6. Adjust:
   - steering head

▼▼▼▼▼▼▼▼▼▼▼▼▼▼▼▼▼▼▼▼▼▼▼▼▼▼▼▼▼▼▼▼

a. Remove the lock washer ①, the upper ring nut ②, and the rubber washer ③.

b. Loosen the lower ring nut ④ and then tighten it to specification with a ring nut wrench ⑤.

NOTE:
Set the torque wrench at a right angle to the ring nut wrench.

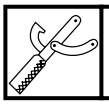	**Ring nut wrench** **YU-33975**
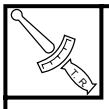	**Lower ring nut (initial tightening torque)** **52 Nm (5.2 m • kg, 37 ft • lb)**

c. Loosen the lower ring nut completely, then tighten it to specification.

⚠ WARNING

Do not overtighten the lower ring nut.

	Lower ring nut (final tightening torque) **3 Nm (0.3 m • kg, 2.2 ft • lb)**

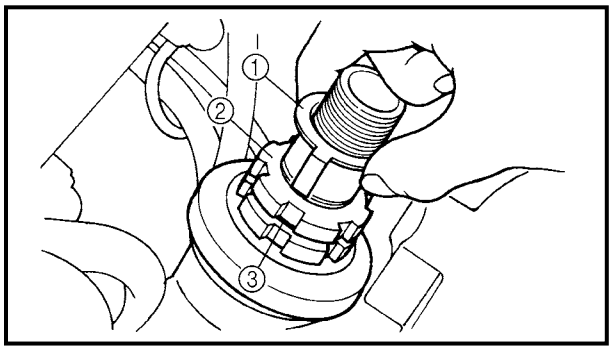

d. Check the steering head for looseness or binding by turning the front fork all the way in both directions. If any binding is felt, remove the lower bracket and check the upper and lower bearings.

   Refer to "STEERING HEAD" in chapter 4.

e. Install the rubber washer ③.

f. Install the upper ring nut ②.

g. Finger tighten the upper ring nut ②, then align the slots of both ring nuts. If necessary, hold the lower ring nut and tighten the upper ring nut until their slots are aligned.

h. Install the lock washer ①.

NOTE:

Make sure the lock washer tabs sit correctly in the ring nut slots.

▲▲▲▲▲▲▲▲▲▲▲▲▲▲▲▲▲▲▲▲▲▲▲▲▲▲▲▲▲▲

7. Install:
   - upper bracket
   - washer
   - steering stem nut

   130 Nm (13.0 m · kg, 94 ft · lb)

8. Tighten:
   - upper bracket pinch bolt

   10 Nm (1.0 m · kg, 7.2 ft · lb)

9. Install:
   - meter assembly
     Refer to "FUEL TANK".

EAS00149

CHECKING THE FRONT FORK

1. Stand the motorcycle on a level surface.

⚠ WARNING

Securely support the motorcycle so that there is no danger of it falling over.

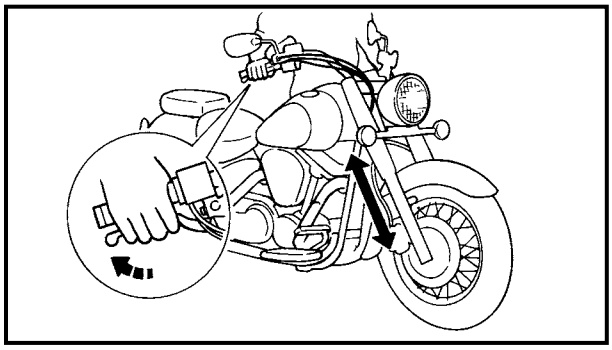

2. Check:
   - inner tube
     Damage/scratches → Replace.
   - oil seal
     Oil leakage → Replace.
3. Hold the motorcycle upright and apply the front brake.
4. Check:
   - front fork operation
     Push down hard on the handlebar several times and check if the front fork rebounds smoothly.
     Rough movement → Repair.
     Refer to "FRONT FORK" in chapter 4.

ADJUSTING THE REAR SHOCK ABSORBER ASSEMBLY

⚠ WARNING

Securely support the motorcycle so that there is no danger of it falling over.

Spring preload

CAUTION:

Never go beyond the maximum or minimum adjustment positions.

1. Adjust:
   - spring preload

NOTE:

Adjust the spring preload with the special wrench and extension bar included in the owner's tool kit.

▼▼▼▼▼▼▼▼▼▼▼▼▼▼▼▼▼▼▼▼▼▼▼▼▼▼▼▼▼▼▼▼

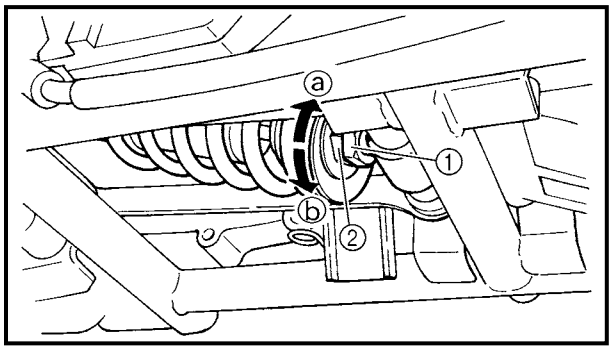

a. Loosen the locknut ①
b. Turn the adjusting ring ② in direction ⓐ or ⓑ.

Direction ⓐ	**Spring preload is increased (suspension is harder).**
Direction ⓑ	**Spring preload is decreased (suspension is softer).**

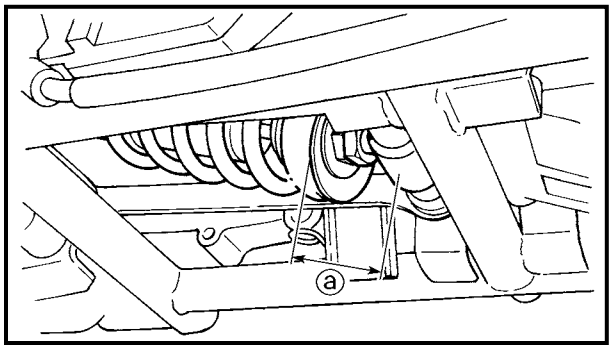

Adjusting length ⓐ
Minimum 42.5 mm (1.67 in)
Standard 42.5 mm (1.67 in)
Maximum 51.5 mm (2.03 in)

CAUTION:

Never turn the adjusting ring beyond the maximum or minimum setting.

▲▲▲▲▲▲▲▲▲▲▲▲▲▲▲▲▲▲▲▲▲▲▲▲▲▲▲▲▲▲

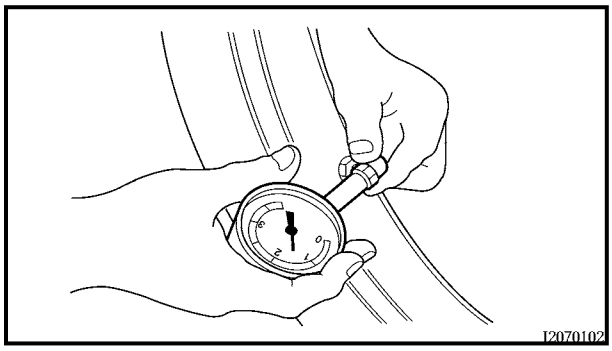

EAS00166
CHECKING THE TIRES

The following procedure applies to both of the tires.

1. Measure:
   - tire pressure
     Out of specification → Regulate.

⚠ WARNING

- **The tire pressure should only be checked and regulated when the tire temperature equals the ambient air temperature.**
- **The tire pressure and the suspension must be adjusted according to the total weight (including cargo, rider, passenger and accessories) and the anticipated riding speed.**
- **Operation of an overloaded motorcycle could cause tire damage, an accident, or an injury.**

NEVER OVERLOAD THE MOTORCYCLE.

Basic weight (with oil and a full fuel tank)	332 kg (732 lb): XV16A 347 kg (765 lb): XV16AT	
Maximum load*	196 kg (432 lb): XV16A 181 kg (399 lb): XV16AT	
Cold tire pressure	Front tire	Rear tire
Up to 90 kg load*	250 kPa (2.5 kgf/cm^2, 36 psi)	250 kPa (2.5 kgf/cm^2, 36 psi)
90 kg ~ maximum load*	250 kPa (2.5 kgf/cm^2, 36 psi)	280 kPa (2.8 kgf/cm^2, 40 psi)
High-speed riding	250 kPa (2.5 kgf/cm^2, 36 psi)	280 kPa (2.8 kgf/cm^2, 40 psi)

* total of cargo, rider, passenger and accessories

WARNING

It is dangerous to ride with a worn-out tire. When the tire tread reaches the wear limit, replace the tire immediately.

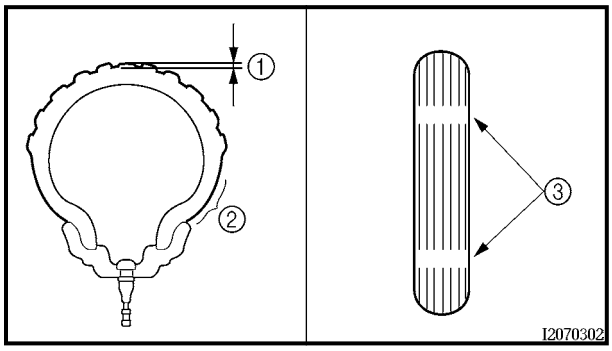

2. Check:
   - tire surfaces
     Damage/wear → Replace the tire.

Minimum tire tread depth
1.6 mm (0.06 in)

① Tire tread depth
② Side wall
③ Wear indicator

WARNING

- **Do not use a tubeless tire on a wheel designed only for tube tires to avoid tire failure and personal injury from sudden deflation.**
- **When using a tube tire, be sure to install the correct tube.**
- **Always replace a new tube tire and a new tube as a set.**

- **To avoid pinching the tube, make sure the wheel rim band and tube are centered in the wheel groove.**
- **Patching a punctured tube is not recommended. If it is absolutely necessary to do so, use great care and replace the tube as soon as possible with a good quality replacement.**

A Tire B Wheel

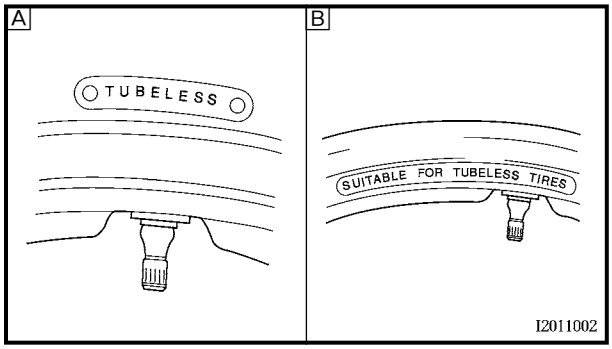

Tube wheel	**Tube tire only**
Tubeless wheel	**Tube or tubeless tire**

- **After extensive tests, the tires listed below have been approved by Yamaha Motor Co., Ltd. for this model. The front and rear tires should always be by the same manufacturer and of the same design. No guarantee concerning handling characteristics can be given if a tire combination other than one approved by Yamaha is used on this motorcycle.**

Front tire

Manufacturer	Size	Model
BRIDGESTONE	130/90-16 67H	G703F
DUNLOP	130/90-16 67H	D404FL

Rear tire

Manufacturer	Size	Model
BRIDGESTONE	150/80 B16 71H	G702
DUNLOP	150/80 B16 71H	D404

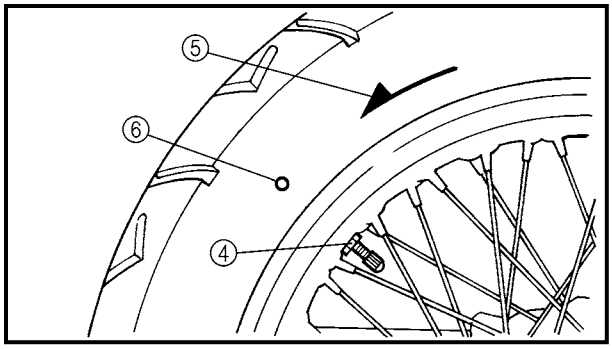

⚠ WARNING

- **After mounting a new tire, ride conservatively for a while to become accustomed to the "feel" of the new tire and to allow the tire to seat itself properly in the rim. Failure to do so could lead to an accident with possible injury to the rider or damage to the motorcycle.**
- **After a tire has been repaired or replaced, be sure to tighten the tire air valve stem locknut ④ to specification.**

NOTE:

For tires with a direction of rotation mark ⑤:

- Install the tire with the mark pointing in the direction of wheel rotation.
- Align the mark ⑥ with the valve installation point.

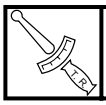	**Tire air valve stem locknut 1.5 Nm (0.5 m • kg, 1.1 ft • lb)**

EAS00169

CHECKING AND TIGHTENING THE SPOKES

The following procedure applies to all of the spokes.

1. Check:
   - spoke
     Bends/damage → Replace.
     Loose → Tighten.
     Tap the spokes with a screwdriver.

NOTE:

A tight spoke will emit a clear, ringing tone; a loose spoke will sound flat.

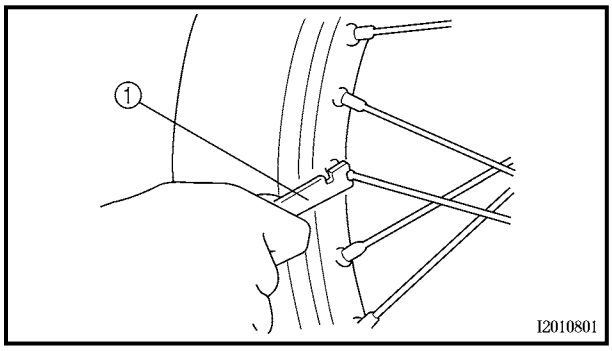

2. Tighten:
   - spokes
     (with a spoke wrench ①)

	3 Nm (0.3 m · kg, 2.2 ft · lb)

NOTE:
Be sure to tighten the spokes before and after break-in.

EAS00170
CHECKING AND LUBRICATING THE CABLES

The following procedure applies to all of the cable sheaths and cables.

⚠ WARNING

Damaged cable sheaths may cause the cable to corrode and interfere with its movement. Replace damaged cable sheaths and cables as soon as possible.

1. Check:
   - cable sheath
     Damage → Replace.

2. Check:
   - cable operation
     Rough movement → Lubricate.

Recommended lubricant
Engine oil or a suitable cable lubricant

NOTE:
Hold the cable end upright and pour a few drops of lubricant into the cable sheath or use a suitable lubing device.

EAS00171

LUBRICATING THE LEVERS AND PEDALS

Lubricate the pivoting point and metal-to-metal moving parts of the levers and pedals.

	Recommended lubricant **Lithium soap base grease**

EAS00172

LUBRICATING THE SIDESTAND

Lubricate the pivoting point and metal-to-metal moving parts of the sidestand.

	Recommended lubricant **Lithium soap base grease**

EAS00174

LUBRICATING THE REAR SUSPENSION

Lubricate the pivoting point and metal-to-metal moving parts of the rear suspension.

	Recommended lubricant **Molybdenum disulfide grease**

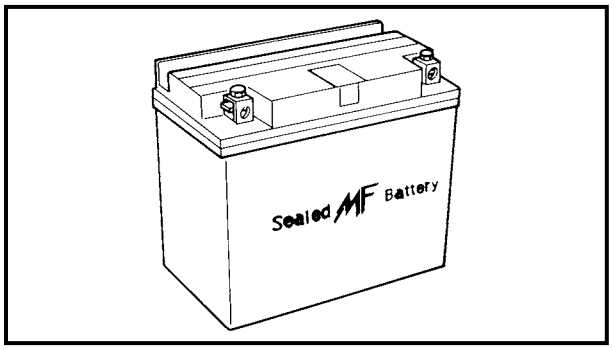

EAS00178

ELECTRICAL SYSTEM

CHECKING AND CHARGING THE BATTERY

WARNING

Batteries generate explosive hydrogen gas and contain electrolyte which is made of poisonous and highly caustic sulfuric acid. Therefore, always follow these preventive measures:

- **Wear protective eye gear when handling or working near batteries.**
- **Charge batteries in a well-ventilated area.**
- **Keep batteries away from fire, sparks, or open flames (e.g., welding equipment, lighted cigarettes).**
- **DO NOT SMOKE when charging or handling batteries.**
- **KEEP BATTERIES AND ELECTROLYTE OUT OF REACH OF CHILDREN.**
- **Avoid bodily contact with electrolyte as it can cause severe burns or permanent eye injury.**

FIRST AID IN CASE OF BODILY CONTACT:
EXTERNAL

- **Skin – Wash with water.**
- **Eyes – Flush with water for 15 minutes and get immediate medical attention.**

INTERNAL

- **Drink large quantities of water or milk followed with milk of magnesia, beaten egg, or vegetable oil. Get immediate medical attention.**
- **This is a sealed battery. Never remove the sealing caps because the balance between cells will not be maintained and battery performance will deteriorate.**

CAUTION:

Charging time, charging amperage and charging voltage for an MF battery are different from those of conventional batteries. The MF battery should be charged as explained in the charging method illustrations. If the battery is overcharged, the electrolyte level will drop considerably. Therefore, take special care when charging the battery.

NOTE:
Since MF batteries are sealed, it is not possible to check the charge state of the battery by measuring the specific gravity of the electrolyte. Therefore, the charge of the battery has to be checked by measuring the voltage at the battery terminals.

1. Remove:
   - rider seat
     Refer to "SEATS AND SIDE COVERS".
2. Disconnect:
   - battery leads
     (from the battery terminals)

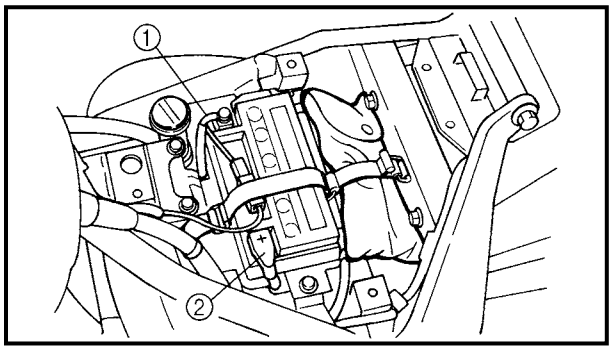

CAUTION:
First, disconnect the negative battery lead ①, then the positive battery lead ②.

3. Remove:
   - battery band
   - battery
4. Measure:
   - battery charge

▼▼▼▼▼▼▼▼▼▼▼▼▼▼▼▼▼▼▼▼▼▼▼▼▼▼▼▼▼▼▼▼

a. Connect a pocket tester to the battery terminals.

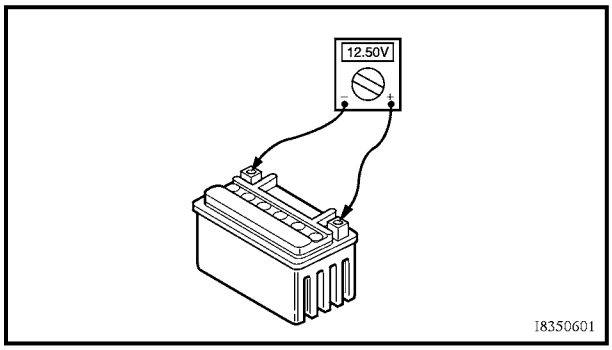

Positive tester probe →
positive battery terminal
Negative tester probe →
negative battery terminal

NOTE:
- The charge state of an MF battery can be checked by measuring its open-circuit voltage (i.e., the voltage when the positive battery terminal is disconnected).
- No charging is necessary when the open-circuit voltage equals or exceeds 12.8 V.

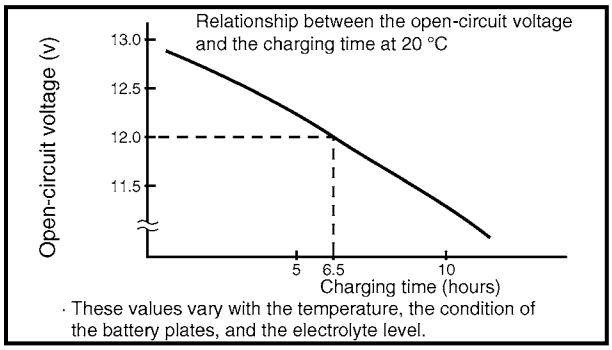

b. Check the charge of the battery, as shown in the charts and the following example.

Example

c. Open-circuit voltage = 12.0 V

d. Charging time = 6.5 hours

e. Charge of the battery = 20 ~ 30 %

▲▲▲▲▲▲▲▲▲▲▲▲▲▲▲▲▲▲▲▲▲▲▲▲▲▲▲▲▲▲▲▲

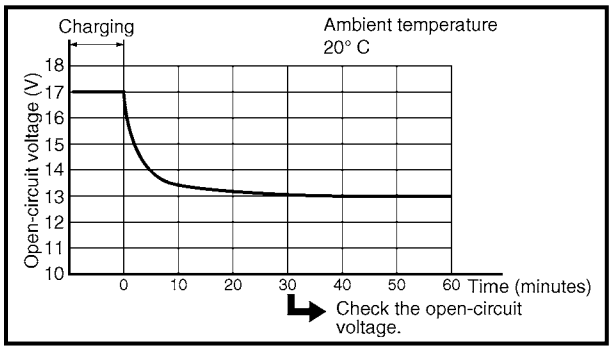

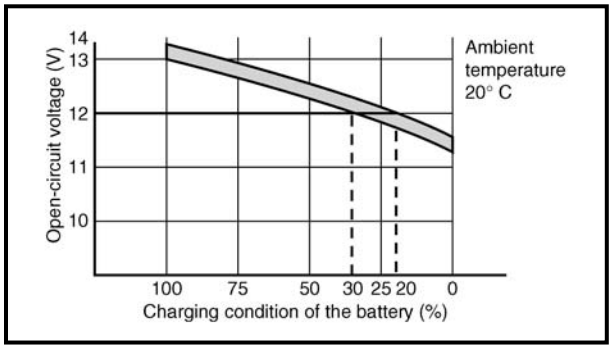

5. Charge:
   - battery
     (refer to the appropriate charging method illustration)

WARNING

Do not quick charge a battery.

CAUTION:

- **Never remove the MF battery sealing caps.**
- **Do not use a high-rate battery charger since it forces a high-amperage current into the battery quickly and can cause battery overheating and battery plate damage.**
- **If it is impossible to regulate the charging current on the battery charger, be careful not to overcharge the battery.**
- **When charging a battery, be sure to remove it from the motorcycle. (If charging has to be done with the battery mounted on the motorcycle, disconnect the negative battery lead from the battery terminal.)**
- **To reduce the chance of sparks, do not plug in the battery charger until the battery charger leads are connected to the battery.**
- **Before removing the battery charger lead clips from the battery terminals, be sure to turn off the battery charger.**
- **Make sure the battery charger lead clips are in full contact with the battery terminals and that they are not shorted. A corroded battery charger lead clip may generate heat in the contact area and a weak clip spring may cause sparks.**
- **If the battery becomes hot to the touch at any time during the charging process, disconnect the battery charger and let the battery cool before reconnecting it. Hot batteries can explode!**
- **As shown in the following illustration, the open-circuit voltage of an MF battery stabilizes about 30 minutes after charging has been completed. Therefore, wait 30 minutes after charging is completed before measuring the open-circuit voltage.**

Charging method using a variable voltage charger

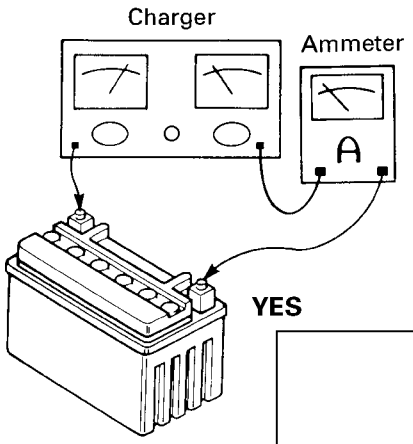

Measure the open-circuit voltage prior to charging.

NOTE:
Leave the battery unused for more than 30 minutes before measuring its open-circuit voltage.

Connect a charger and ammeter to the battery and start charging.

NOTE:
Set the charging voltage to 16 ~ 17 V. (If the charging voltage is lower, charging will be insufficient, if it is higher, the battery will be over-charged.)

Is the amperage higher than the standard charging amperage written on the battery?

YES → Adjust the voltage to obtain the standard charging amperage.

NO → Adjust the charging voltage to 20 ~ 25 V.

Monitor the amperage for 3 ~ 5 minutes. Is the standard charging amperage exceeded?

YES → Adjust the voltage to obtain the standard charging amperage.

NO → If the amperage does not exceed the standard charging amperage after 5 minutes, replace the battery.

Set the timer to the charging time determined by the open -circuit voltage.
Refer to "CHECKING AND CHARGING THE BATTERY."

If the required charging time exceeds 5 hours, it is advisable to check the charging amperage after 5 hours. If there is any change in the amperage, readjust the voltage to obtain the standard charging amperage.

Leave the battery unused for more than 30 minutes before measuring its open-circuit voltage.
12.8 V ➔ Charging is complete.
12.0~12.7 V ➔ Recharging is required.
Under 12.0 V ➔ Replace the battery.

Charging method using a constant voltage charger

Measure the open-circuit voltage prior to charging.

NOTE:
Leave the battery unused for more than 30 minutes before measuring its open-circuit voltage.

↓

Connect a charger and ammeter to the battery and start charging.

↓

Is the amperage higher than the standard charging amperage written on the battery?

YES →

Charge the battery until the charging voltage reaches 15 V.

NOTE:
Set the charging time to a maximum of 20 hours.

↓

Leave the battery unused for more than 30 minutes before measuring its open-circuit voltage.
12.8 V ➔ Charging is complete.
12.0~12.7 V ➔ Recharging is required.
Under 12.0 V ➔ Replace the battery.

CAUTION:
Constant amperage chargers are not suitable for charging MF batteries.

NO →

This type of battery charger cannot charge an MF battery. A variable-voltage charger is recommended.

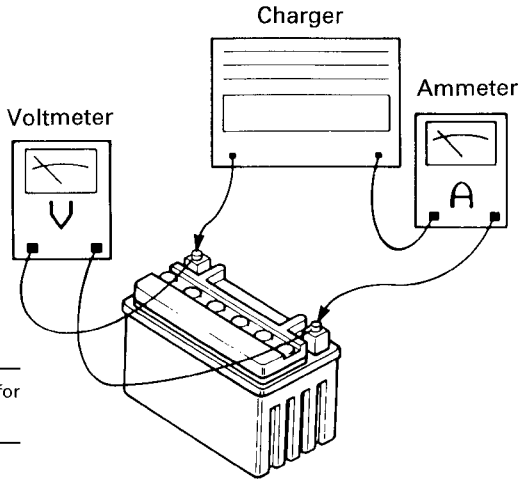

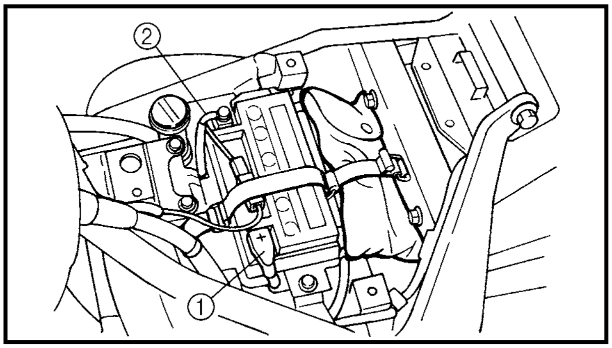

6. Install:
   • battery
   • battery band
7. Connect:
   • battery leads
     (to the battery terminals)

CAUTION:

First, connect the positive battery lead ①, then the negative battery lead ②.

8. Check:
   • battery terminals
     Dirt → Clean with a wire brush.
     Loose connection → Connect properly.
9. Lubricate:
   • battery terminals

	Recommended lubricant **Dielectric grease**

10. Install:
    • rider seat
      Refer to "SEATS AND SIDE COVERS".

EAS00181
CHECKING THE FUSES

The following procedure applies to all of the fuses.

CAUTION:

To avoid a short circuit, always set the main switch to "OFF" when checking or replacing a fuse.

1. Remove:
   • left side cover
     Refer to "SEATS AND SIDE COVERS".
2. Check:
   • continuity

▼▼▼▼▼▼▼▼▼▼▼▼▼▼▼▼▼▼▼▼▼▼▼▼▼▼▼▼▼▼

a. Connect the pocket tester to the fuse and check the continuity.

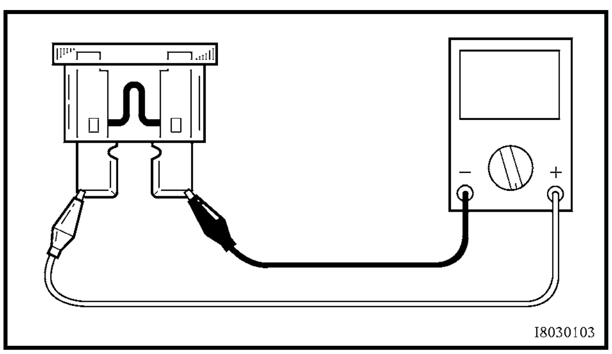

NOTE:
Set the pocket tester selector to "Ω × 1".

	Pocket tester **YU-03112**

b. If the pocket tester indicates "∞", replace the fuse.

▲▲▲▲▲▲▲▲▲▲▲▲▲▲▲▲▲▲▲▲▲▲▲▲▲▲▲▲

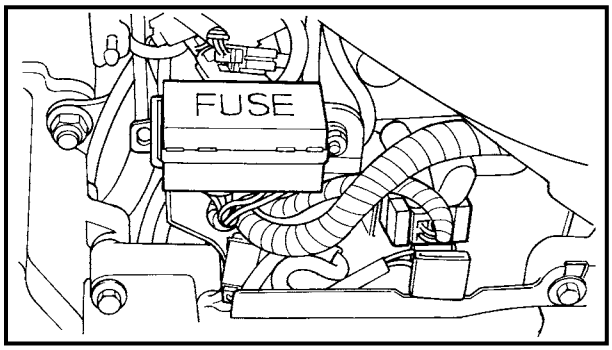

3. Replace:
- blown fuse

▼▼▼▼▼▼▼▼▼▼▼▼▼▼▼▼▼▼▼▼▼▼▼▼▼▼▼▼

a. Set the main switch to "OFF".
b. Install a new fuse of the correct amperage.
c. Set the main switch to "ON" and verify if the electrical circuit is operational.
d. If the fuse immediately blows again, check the electrical circuit.

Item	Amperage	Q'ty
Main fuse	**30A**	**1**
Headlight fuse	**15A**	**1**
Ignition fuse	**15A**	**1**
Signaling system fuse	**10A**	**1**
Carburetor heater fuse	**10A**	**1**
Backup fuse	**5A**	**1**
Reserve fuse	**30A**	**1**
Reserve fuse	**15A**	**1**
Reserve fuse	**10A**	**1**
Reserve fuse	**5A**	**1**

▲▲▲▲▲▲▲▲▲▲▲▲▲▲▲▲▲▲▲▲▲▲▲▲▲▲▲▲

⚠ WARNING

Never use a fuse with an amperage other than that specified. Improvising or using a fuse with the wrong amperage may cause extensive damage to the electrical system, cause the lighting and ignition systems to malfunction and could possibly cause a fire.

4. Install:
   - left side cover
     Refer to “SEATS AND SIDE COVERS”.

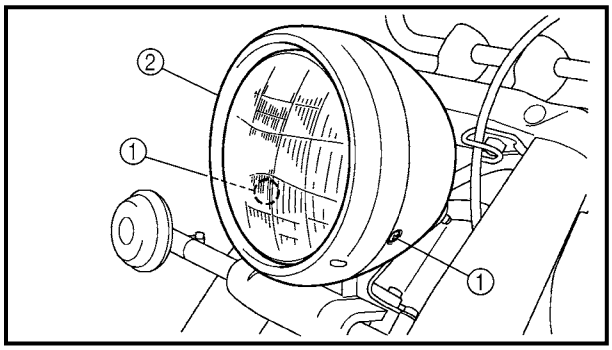

EAS00182
REPLACING THE HEADLIGHT BULB

1. Remove:
   - screws ①
   - headlight lens unit ②

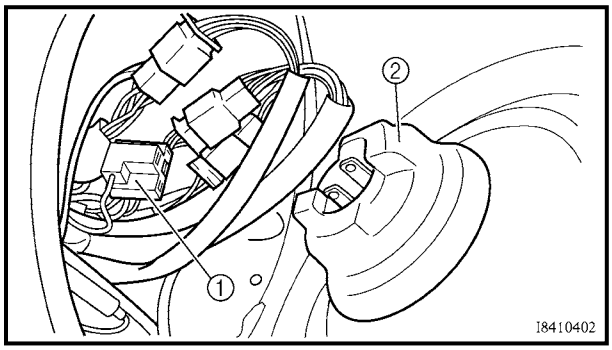

2. Disconnect:
   - headlight coupler ①
3. Remove:
   - headlight bulb holder cover ②

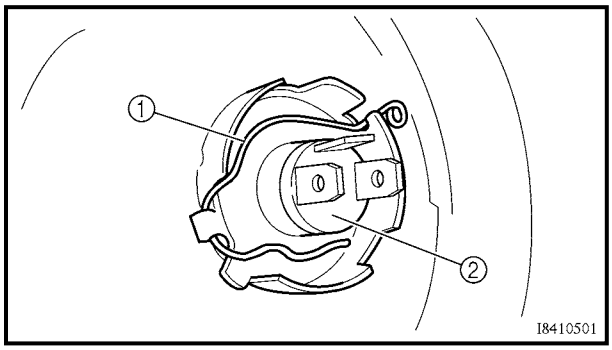

4. Detach:
   - headlight bulb holder ①
5. Remove:
   - headlight bulb ②

⚠ WARNING

Since the headlight bulb gets extremely hot, keep flammable products and your hands away from the bulb until it has cooled down.

6. Install:
   - headlight bulb New
     Secure the new headlight bulb with the headlight bulb holder.

CAUTION:

Avoid touching the glass part of the headlight bulb to keep it free from oil, otherwise the transparency of the glass, the life of the bulb, and the luminous flux will be adversely affected. If the headlight bulb gets soiled, thoroughly clean it with a cloth moistened with alcohol or lacquer thinner.

7. Attach:
   - headlight bulb holder
8. Install:
   - headlight bulb holder cover
9. Connect:
   - headlight coupler
10. Install:
    - headlight lens unit
    - screws

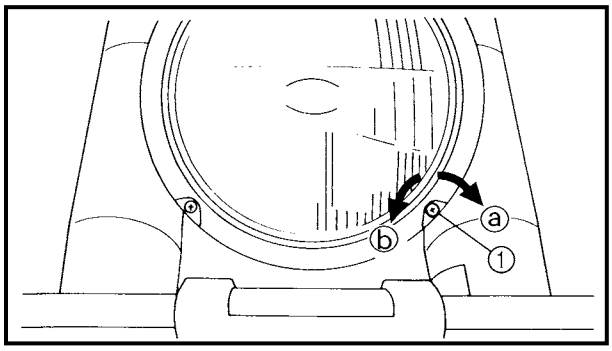

EAS00184
ADJUSTING THE HEADLIGHT BEAM

1. Adjust:
   - headlight beam (vertically)

▼▼▼▼▼▼▼▼▼▼▼▼▼▼▼▼▼▼▼▼▼▼▼▼▼▼▼▼▼▼▼▼

a. Turn the adjusting screw ① in direction ⓐ or ⓑ.

Direction ⓐ	**Headlight beam is raised.**
Direction ⓑ	**Headlight beam is lowered.**

▲▲▲▲▲▲▲▲▲▲▲▲▲▲▲▲▲▲▲▲▲▲▲▲▲▲▲▲▲▲▲▲

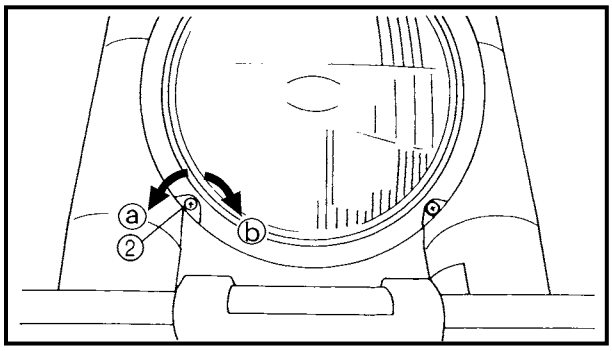

2. Adjust:
   - headlight beam (horizontally)

▼▼▼▼▼▼▼▼▼▼▼▼▼▼▼▼▼▼▼▼▼▼▼▼▼▼▼▼▼▼▼▼

a. Turn the adjusting knob ② in direction ⓐ or ⓑ.

Direction ⓐ	**Headlight beam moves to the right.**
Direction ⓑ	**Headlight beam moves to the left.**

▲▲▲▲▲▲▲▲▲▲▲▲▲▲▲▲▲▲▲▲▲▲▲▲▲▲▲▲▲▲▲▲

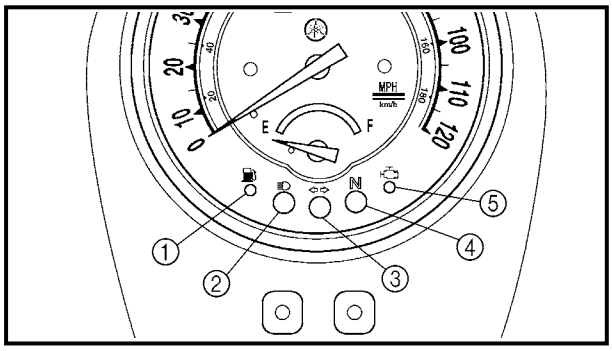

INSTRUMENT FUNCTIONS

INDICATOR LIGHTS

① Fuel indicator light " "
② High beam indicator light " "
③ Turn indicator light " "
④ Neutral indicator light " N "
⑤ Engine trouble indicator light " "

Neutral indicator light " N "
This indicator comes on when the transmission is in neutral.

High beam indicator light " "
This indicator comes on when the headlight high beam is used.

Turn indicator light " "
This indicator flashes when the turn switch is moved to the left or right.

Fuel level indicator light " "
When the fuel level drops below approximately 3.5 L (0.8 Imp gal, 0.9 US gal), this light will come on. When this light comes on, turn the fuel cock to "RES". Then, fill the tank at the first opportunity.

Engine trouble indicator light " "
This indicator light will come on or flash if trouble occurs in a monitoring circuit. In such a case, take the motorcycle to a Yamaha dealer to have the self-diagnostic systems checked.

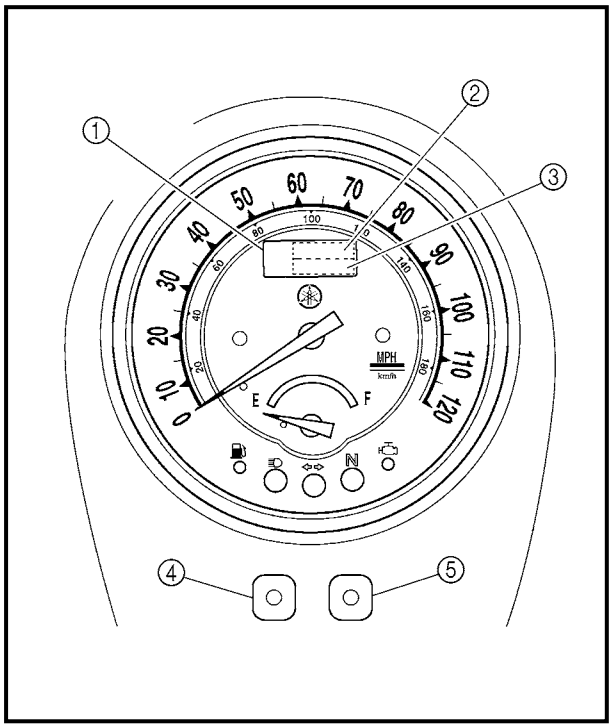

COMBINATION METER

① Combination meter
② Clock
③ Odometer/trip meter
④ Mode button
⑤ Set button

This combination meter is equipped with an odometer and a twin trip meter. Pushing the mode button will change the display from one to the other as follows.

"ODO" → "TRIP A" → "TRIP B" → "ODO"

When set to "ODO", it indicates the motorcycle's total mileage. When set to "TRIP A" or "TRIP B", it indicates the motorcycle's mileage since the trip meter was last reset. Use the trip meter to estimate how far you can ride on a tank of fuel. This information will enable you to plan fuel stops in the future.

To reset the trip meter to “0”, push the set button until it displays “TRIP A” or “TRIP B”, then push mode button and hold it down for at least one second.

NOTE:

This motorcycle does not have a tachometer. However, it is equipped with an engine revolution limiter, which prevents the engine revolution from exceeding approximately 4,400 r/min.

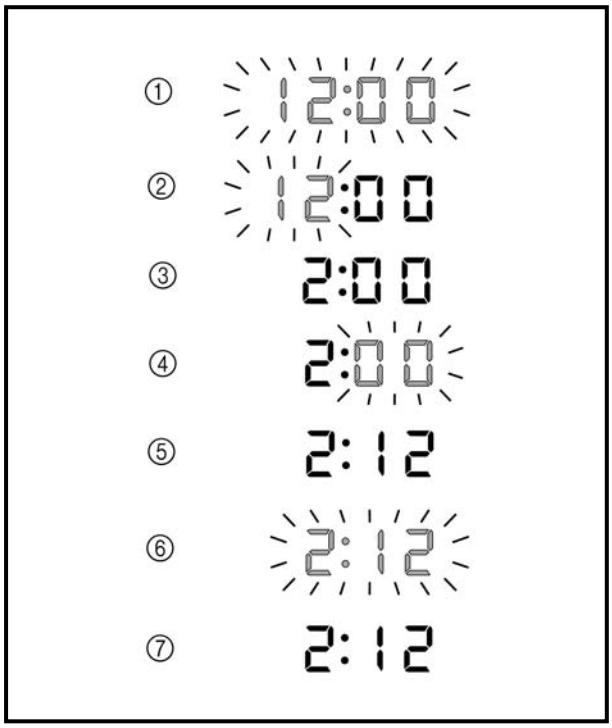

Setting the clock

This clock always shows the time regardless of the main switch position.

1. Turn the main switch to “ON”.
2. Press both left and right buttons simultaneously until both hours and minutes flash. ①
3. Push the left button and the hour display will flash. ②
4. Push the right button to change the hours. ③
5. Push the left button and the minute display will flash. ④
6. Push the right button to change the minutes. ⑤
7. Push the left button and both hours and minutes will flash. ⑥
8. Push the right button for two seconds to set the clock. ⑦

CONTENTS
CHASSIS

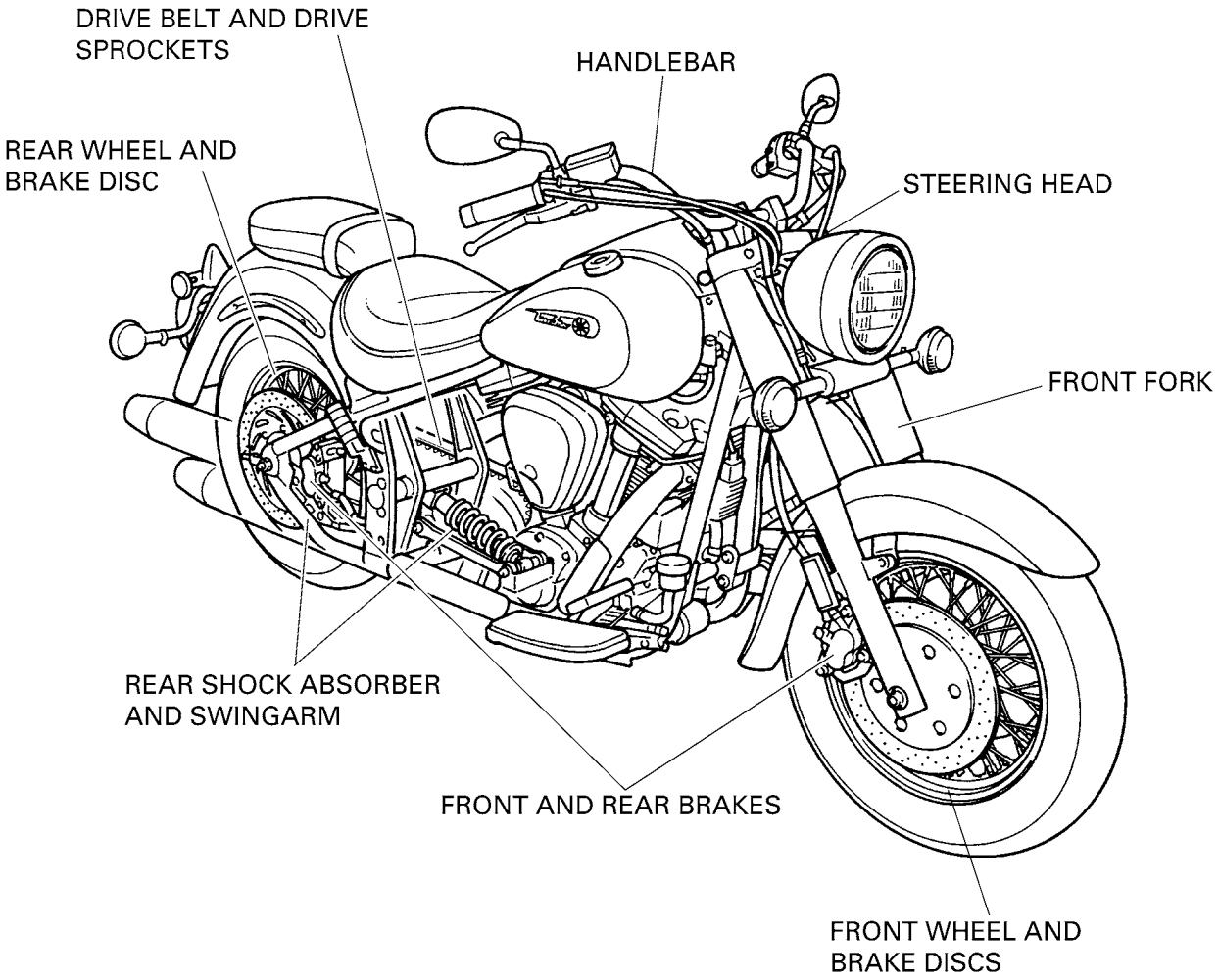

FRONT WHEEL AND BRAKE DISCS 4-1
REMOVING THE FRONT WHEEL 4-3
DISASSEMBLING THE FRONT WHEEL 4-3
CHECKING THE FRONT WHEEL 4-4
CHECKING THE BRAKE DISCS 4-6
ASSEMBLING THE FRONT WHEEL 4-7
INSTALLING THE FRONT WHEEL 4-7
ADJUSTING THE FRONT WHEEL STATIC BALANCE 4-9

REAR WHEEL, BRAKE DISC AND REAR WHEEL PULLEY 4-11
REMOVING THE REAR WHEEL 4-16
CHECKING THE REAR WHEEL 4-16
CHECKING THE REAR WHEEL DRIVE HUB 4-17
CHECKING AND REPLACING THE REAR WHEEL PULLEY 4-17
ASSEMBLING THE REAR WHEEL 4-18
INSTALLING THE REAR WHEEL 4-18
ADJUSTING THE REAR WHEEL STATIC BALANCE 4-21

FRONT AND REAR BRAKES 4-22
REPLACING THE FRONT BRAKE PADS 4-24
REPLACING THE REAR BRAKE PADS 4-27
DISASSEMBLING THE FRONT BRAKE MASTER CYLINDER 4-35
DISASSEMBLING THE REAR BRAKE MASTER CYLINDER 4-35
CHECKING THE FRONT AND REAR BRAKE MASTER CYLINDERS 4-36
ASSEMBLING AND INSTALLING THE FRONT BRAKE MASTER CYLINDER 4-37
ASSEMBLING AND INSTALLING THE REAR BRAKE MASTER CYLINDER 4-40
DISASSEMBLING THE FRONT BRAKE CALIPERS 4-47
DISASSEMBLING THE REAR BRAKE CALIPER 4-47
CHECKING THE FRONT AND REAR BRAKE CALIPERS 4-48
ASSEMBLING AND INSTALLING THE FRONT BRAKE CALIPERS 4-49
ASSEMBLING AND INSTALLING THE REAR BRAKE CALIPER 4-52

FRONT FORK 4-55
REMOVING THE FRONT FORK LEGS 4-59
DISASSEMBLING THE FRONT FORK LEGS 4-59
CHECKING THE FRONT FORK LEGS 4-60
ASSEMBLING THE FRONT FORK LEGS 4-61
INSTALLING THE FRONT FORK LEGS 4-64

HANDLEBAR 4-67
REMOVING THE HANDLEBAR 4-69
CHECKING THE HANDLEBAR 4-69
INSTALLING THE HANDLEBAR 4-69

STEERING HEAD 4-73
REMOVING THE LOWER BRACKET 4-75
CHECKING THE STEERING HEAD 4-75
INSTALLING THE STEERING HEAD 4-76

REAR SHOCK ABSORBER AND SWINGARM 4-79
HANDLING THE REAR SHOCK ABSORBER 4-83
DISPOSING OF A REAR SHOCK ABSORBER AND GAS CYLINDER 4-83
REMOVING THE REAR SHOCK ABSORBER AND SWINGARM 4-83
CHECKING THE REAR SHOCK ABSORBER 4-84
CHECKING THE REPLAY ARM AND CONNECTING ARM 4-85
CHECKING THE SWINGARM 4-85
INSTALLING THE REAR SHOCK ABSORBER AND SWINGARM 4-86

DRIVE BELT AND DRIVE PULLEY 4-90
REMOVING THE DRIVE BELT AND DRIVE PULLEY 4-91
CHECKING THE DRIVE BELT 4-91
INSTALLING THE DRIVE BELT AND DRIVE PULLEY 4-92

EAS00514

CHASSIS

FRONT WHEEL AND BRAKE DISCS

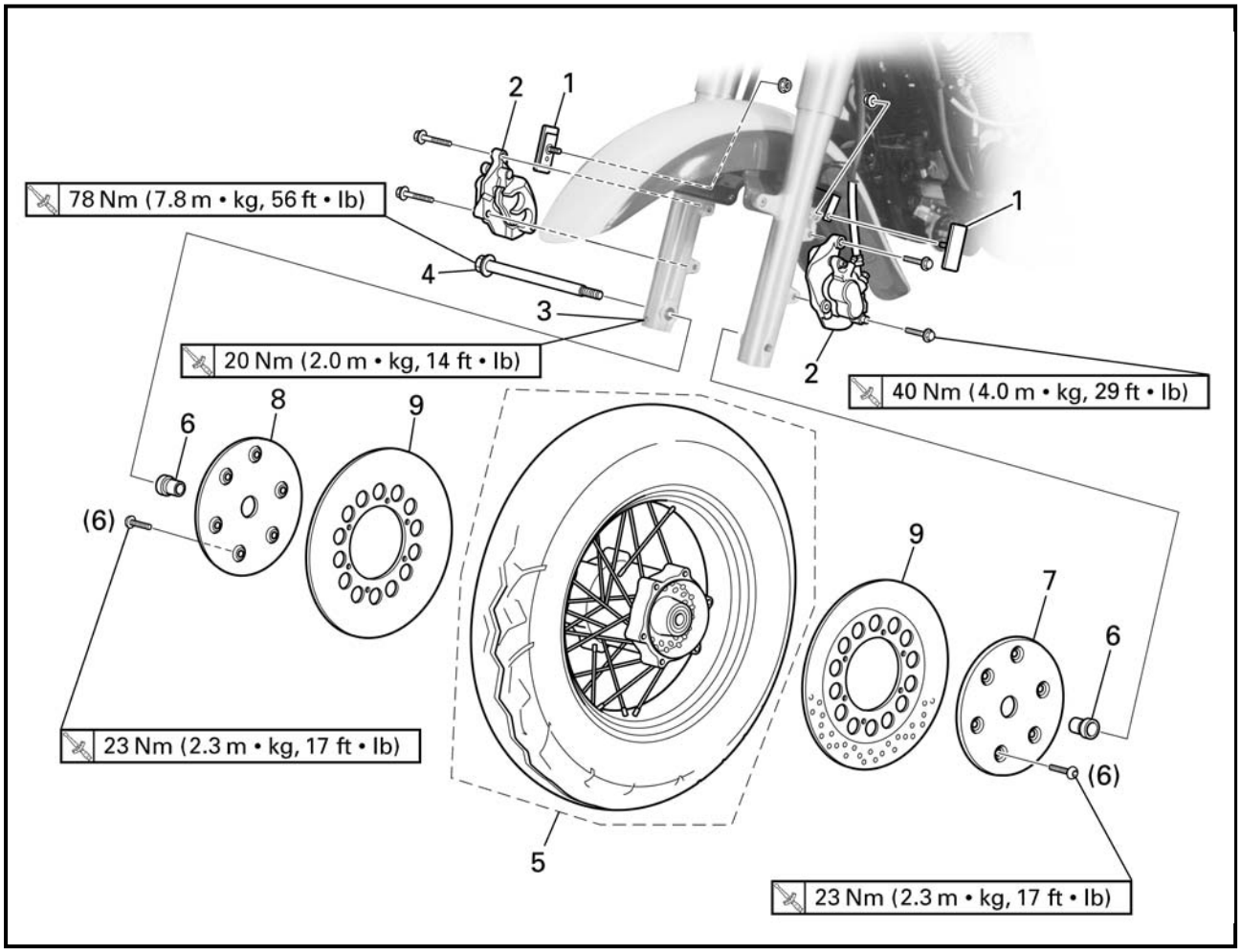

Order	Job/Part	Q'ty	Remarks
	Removing the front wheel and brake discs		Remove the parts in the order listed. **NOTE:** Place the motorcycle on a suitable stand so that the front wheel is elevated.
1	Reflector (left and right)	2	
2	Brake caliper (left and right)	2	
3	Wheel axle pinch bolt	1	Loosen.
4	Front wheel axle	1	
5	Front wheel	1	
6	Collar (left and right)	2	
7	Brake disc cover (left)	1	
8	Brake disc cover (right-with weight)	1	
9	Brake disc (left and right)	2	
			For installation, reverse the removal procedure.

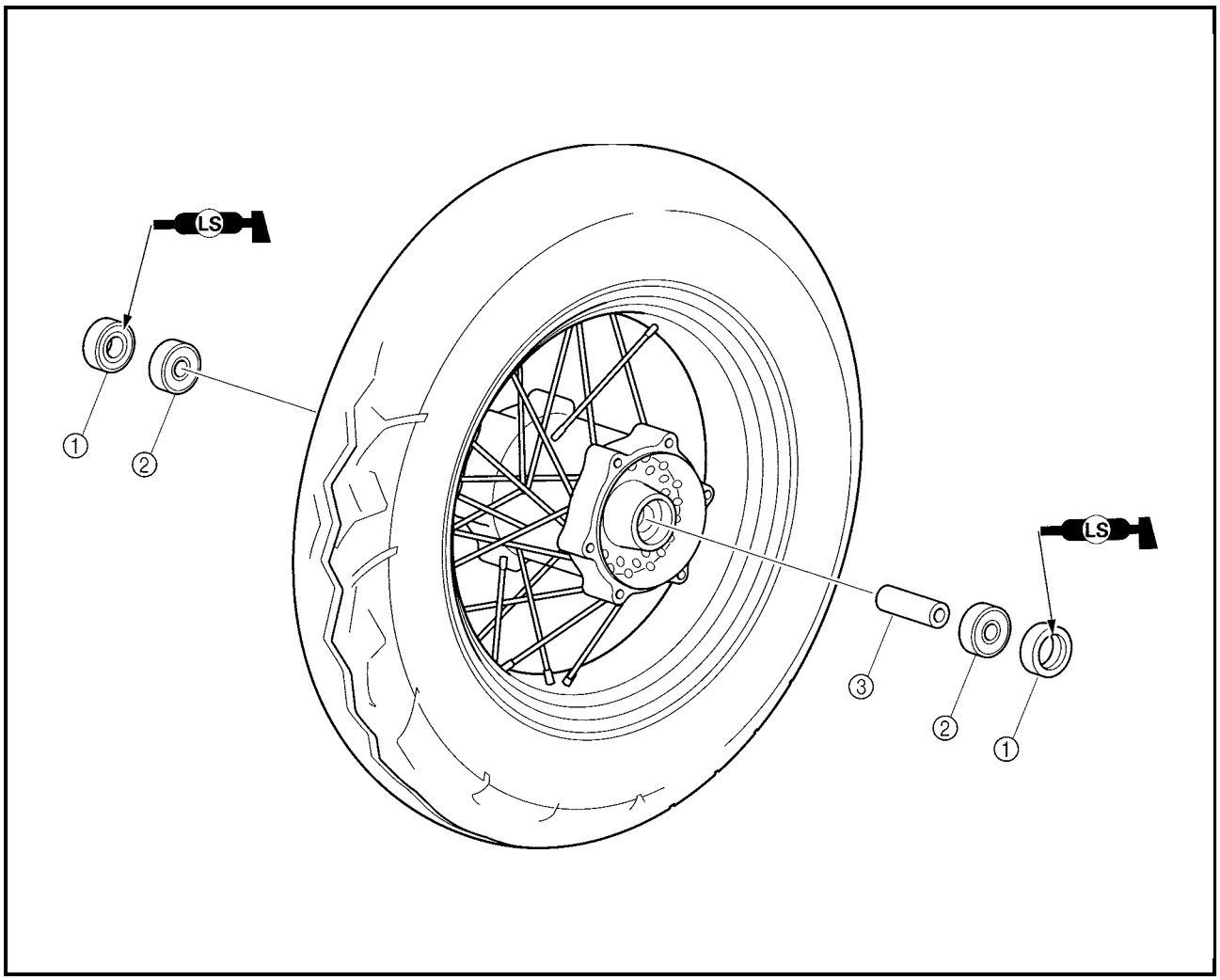

Order	Job/Part	Q'ty	Remarks
	Disassembling the front wheel		Remove the parts in the order listed.
①	Oil seal (left and right)	2	
②	Wheel bearing (left and right)	2	
③	Spacer	1	
			For assembly, reverse the disassembly procedure.

EAS00521
REMOVING THE FRONT WHEEL

1. Stand the motorcycle on a level surface.

WARNING

Securely support the motorcycle so that there is no danger of it falling over.

NOTE:
Place the motorcycle on a suitable stand so that the front wheel is elevated.

2. Remove:
   - left brake caliper
   - right brake caliper

NOTE:
Do not squeeze the brake lever when removing the brake calipers.

3. Elevate:
   - front wheel

NOTE:
Place the motorcycle on a suitable stand so that the front wheel is elevated.

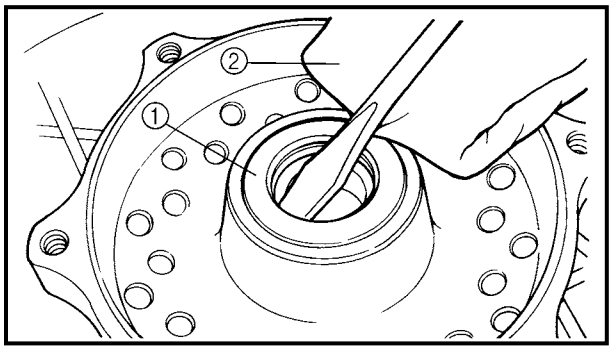

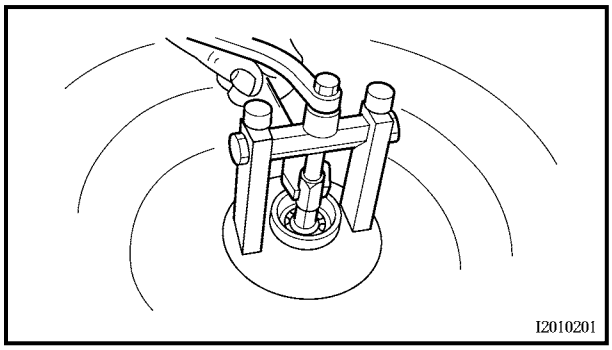

EAS00523
DISASSEMBLING THE FRONT WHEEL

1. Remove:
   - oil seals
   - wheel bearings

▼▼▼▼▼▼▼▼▼▼▼▼▼▼▼▼▼▼▼▼▼▼▼▼▼▼▼▼▼▼▼▼

a. Clean the outside of the front wheel hub.

b. Remove the oil seals ① with a flat-head screwdriver.

NOTE:
To prevent damaging the wheel, place a rag ② between the screwdriver and the wheel surface.

c. Remove the wheel bearings with a general bearing puller.

▲▲▲▲▲▲▲▲▲▲▲▲▲▲▲▲▲▲▲▲▲▲▲▲▲▲▲▲▲▲▲▲

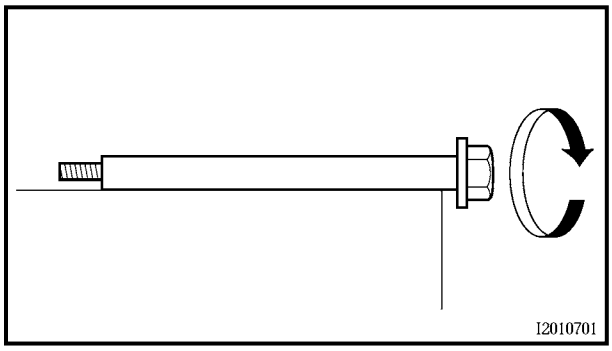

EAS00526
CHECKING THE FRONT WHEEL

1. Check:
   - wheel axle
     Roll the wheel axle on a flat surface.
     Bends → Replace.

⚠ WARNING

Do not attempt to straighten a bent wheel axle.

2. Check:
   - tire
   - front wheel
     Damage/wear → Replace.
     Refer to "CHECKING THE TIRES" and "CHECKING THE WHEELS" in chapter 3.

3. Check:
   - spokes
     Bends/damage → Replace.
     Loose → Tighten.
     Refer to "CHECKING AND TIGHTENING THE SPOKES" in chapter 3.

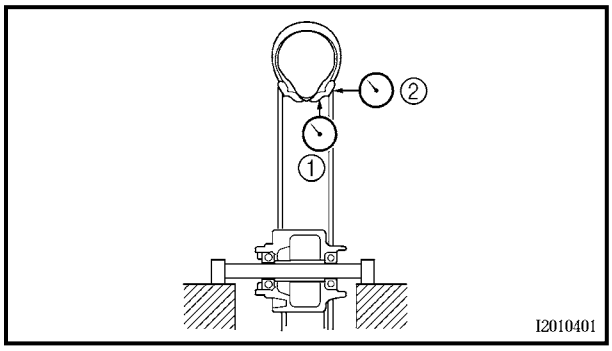

4. Measure:
   - radial wheel runout ①
   - lateral wheel runout ②
     Over the specified limits → Replace.

Maximum radial wheel runout
1.0 mm (0.04 in)
Maximum lateral wheel runout
0.5 mm (0.02 in)

5. Check:
   - collars
     Damage/wear → Replace.

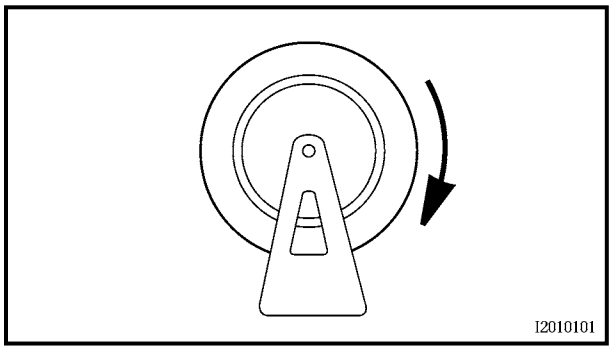

6. Check:
   - wheel bearings
     Front wheel turns roughly or is loose → Replace the wheel bearings.
   - oil seals
     Damage/wear → Replace.

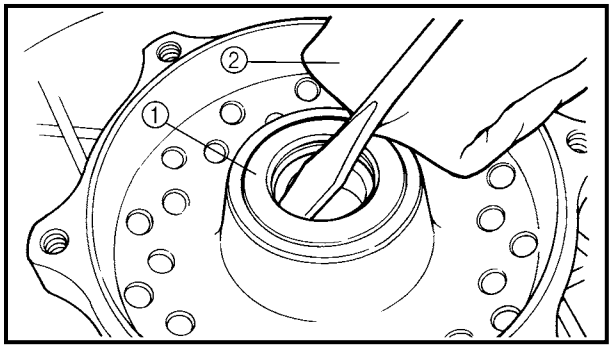

7. Replace:
   - wheel bearings New
   - oil seals New

▼▼▼▼▼▼▼▼▼▼▼▼▼▼▼▼▼▼▼▼▼▼▼▼▼▼▼▼▼▼▼▼

a. Clean the outside of the front wheel hub.

b. Remove the oil seals ① with a flat-head screwdriver.

NOTE:
To prevent damaging the wheel, place a rag ② between the screwdriver and the wheel surface.

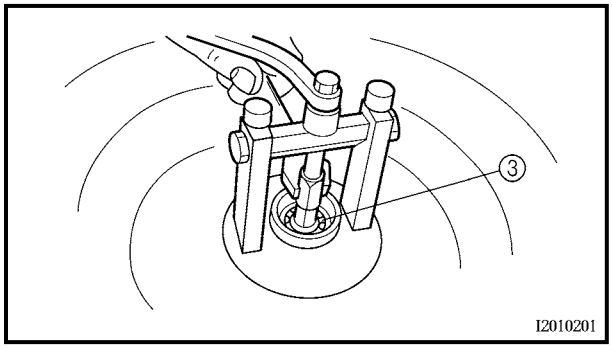

c. Remove the wheel bearings ③ with a general bearing puller.

d. Install the new wheel bearings and oil seals in the reverse order of disassembly.

CAUTION:
Do not contact the wheel bearing inner race ④ or balls ⑤. Contact should be made only with the outer race ⑥.

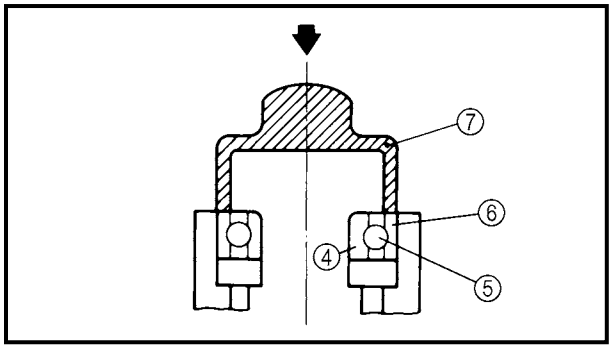

NOTE:
Use a socket ⑦ that matches the diameter of the wheel bearing outer race and oil seal.

▲▲▲▲▲▲▲▲▲▲▲▲▲▲▲▲▲▲▲▲▲▲▲▲▲▲▲▲▲▲▲▲

EAS00531
CHECKING THE BRAKE DISCS

The following procedure applies to all of the brake discs.

1. Check:
   - brake disc
     Damage/galling → Replace.
2. Measure:
   - brake disc deflection
     Out of specification → Correct the brake disc deflection or replace the brake disc.

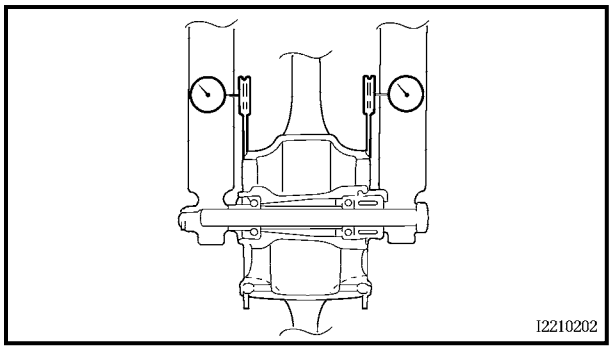

Maximum brake disc deflection
Front: 0.15 mm (0.006 in)
Rear: 0.15 mm (0.006 in)

a. Place the motorcycle on a suitable stand so that the wheel is elevated.
b. Before measuring the front brake disc deflection, turn the handlebar to the left or right to ensure that the front wheel is stationary.
c. Remove the brake caliper.
d. Hold the dial gauge at a right angle against the brake disc surface.
e. Measure the deflection 1.5 mm (0.05 in) below the edge of the brake disc.

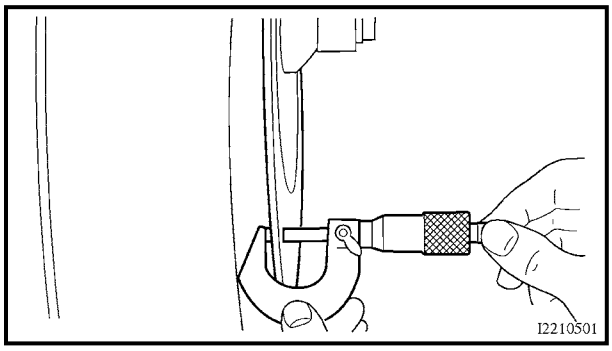

3. Measure:
   - brake disc thickness
     Measure the brake disc thickness at a few different locations.
     Out of specification → Replace.

Minimum brake disc thickness
Front: 4.5 mm (0.18 in)
Rear: 6.5 mm (0.26 in)

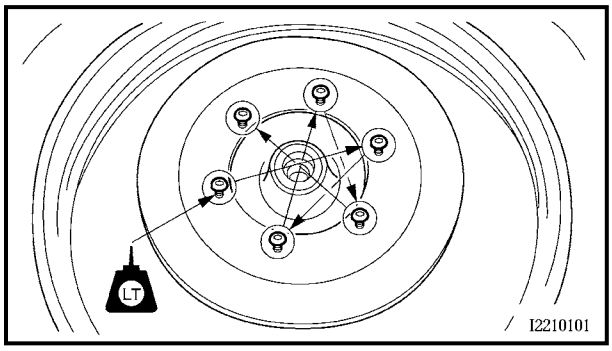

4. Adjust:
   - brake disc deflection

a. Remove the brake disc cover and brake disc.
b. Rotate the brake disc cover and brake disc by one bolt hole.
c. Install the brake disc cover and brake disc.

NOTE:
Tighten the brake disc bolts in stages and in a crisscross pattern.

	Brake disc bolt **23 Nm (2.3 m • kg, 17 ft • lb)** **LOCTITE®**

d. Measure the brake disc deflection.

e. If out of specification, repeat the adjustment steps until the brake disc deflection is within specification.

f. If the brake disc deflection cannot be brought within specification, replace the brake disc.

▲▲▲▲▲▲▲▲▲▲▲▲▲▲▲▲▲▲▲▲▲▲▲▲▲▲▲▲▲▲

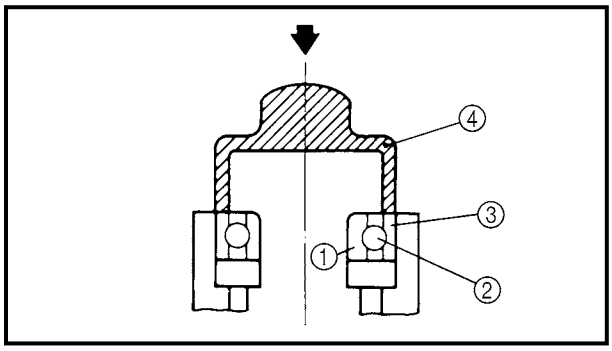

EAS00539
ASSEMBLING THE FRONT WHEEL

1. Install:
   - wheel bearings
   - oil seals New

   Install the new wheel bearings and oil seals in the reverse order of disassembly.

CAUTION:
Do not contact the wheel bearing inner race ① or balls ②. Contact should be made only with the outer race ③.

NOTE:
Use a socket ④ that matches the diameter of the wheel bearing outer race and oil seal.

EAS00544
INSTALLING THE FRONT WHEEL

The following procedure applies to both brake discs.

1. Lubricate:
   - wheel axle
   - oil seal lips

	Recommended lubricant **Lithium soap base grease**

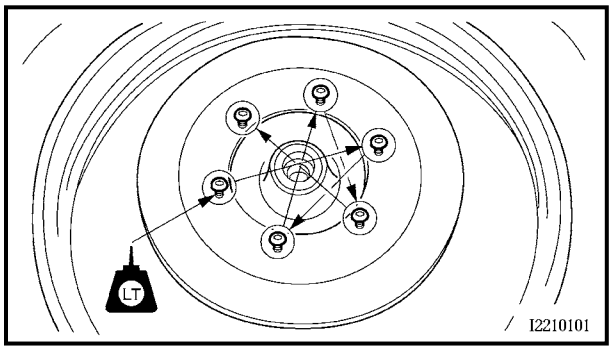

2. Install:
   - brake discs
   - brake disc covers

23 Nm (2.3 m · kg, 17 ft · lb)

NOTE:
- Apply locking agent (LOCTITE® 648) to the threads of the brake disc bolts.
- Tighten the brake disc bolts in stages and in a crisscross pattern.

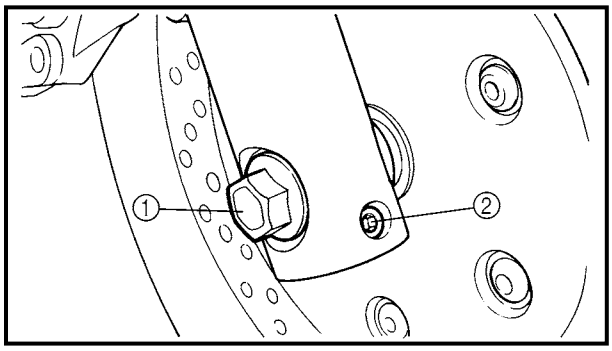

3. Install:
   - collars
   - front wheel
   - front wheel axle
4. Tighten:
   - front wheel axle ①

78 Nm (7.8 m · kg, 56 ft · lb)

   - wheel axle pinch bolt ②

20 Nm (2.0 m · kg, 14 ft · lb)

CAUTION:

Before tightening the wheel axle nut, push down hard on the handlebar several times and check if the front fork rebounds smoothly.

5. Install:
   - brake calipers

40 Nm (4.0 m · kg, 29 ft · lb)

WARNING

Make sure the brake hose is routed properly.

6. Install:
   - reflectors

EAS00549
ADJUSTING THE FRONT WHEEL STATIC BALANCE

NOTE:
- After replacing the tire, wheel, or both, the front wheel static balance should be adjusted.
- Adjust the front wheel static balance with the brake discs installed.

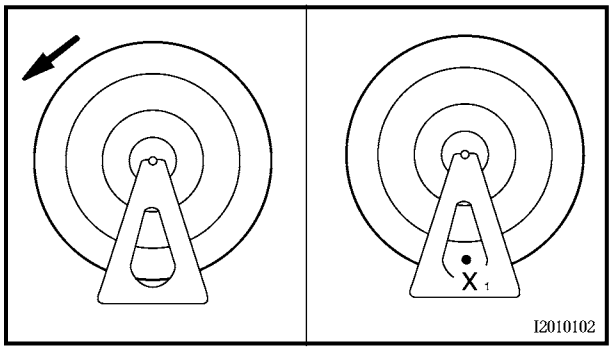

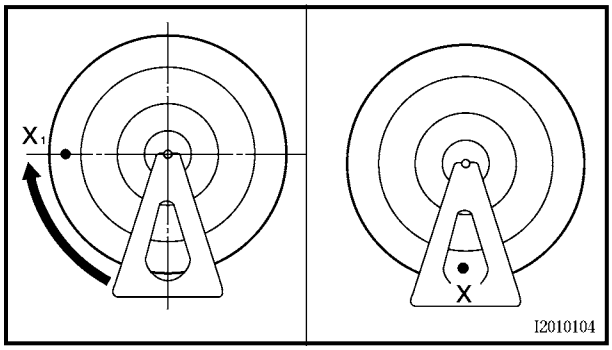

1. Remove:
   - balancing weight(s)
2. Find:
   - front wheel's heavy spot

▼▼▼▼▼▼▼▼▼▼▼▼▼▼▼▼▼▼▼▼▼▼▼▼▼▼▼▼▼▼

a. Place the front wheel on a suitable balancing stand.
b. Spin the front wheel.
c. When the front wheel stops, put an "X_1" mark at the bottom of the wheel.
d. Turn the front wheel 90° so that the "X_1" mark is positioned as shown.
e. Release the front wheel.
f. When the wheel stops, put an "X_2" mark at the bottom of the wheel.
g. Repeat steps (b) through (f) several times until all the marks come to rest at the same spot.
h. The spot where all the marks come to rest is the front wheel's heavy spot "X".

▲▲▲▲▲▲▲▲▲▲▲▲▲▲▲▲▲▲▲▲▲▲▲▲▲▲▲▲▲▲

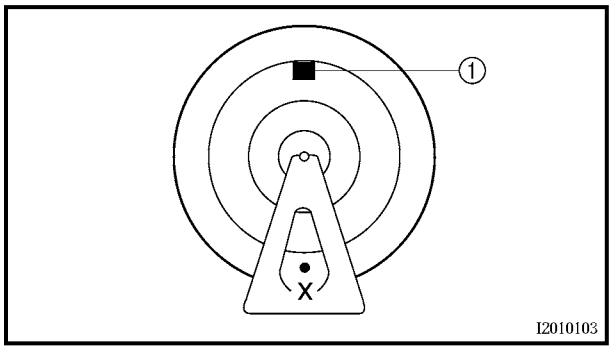

3. Adjust:
   - front wheel static balance

▼▼▼▼▼▼▼▼▼▼▼▼▼▼▼▼▼▼▼▼▼▼▼▼▼▼▼▼▼▼

a. Install a balancing weight ① onto the rim exactly opposite the heavy spot "X".

NOTE:
Start with the lightest weight.

b. Turn the front wheel 90° so that the heavy spot is positioned as shown.

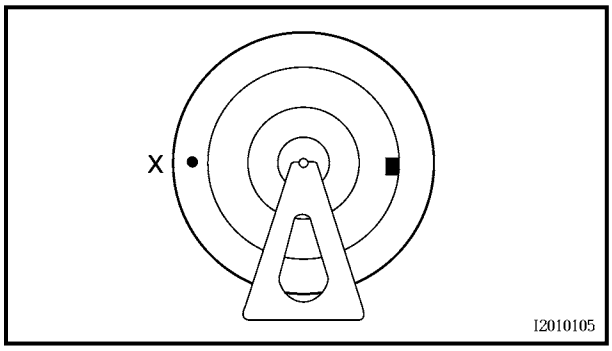

c. If the heavy spot does not stay in that position, install a heavier weight.

d. Repeat steps (b) and (c) until the front wheel is balanced.

▲▲▲▲▲▲▲▲▲▲▲▲▲▲▲▲▲▲▲▲▲▲▲▲▲▲▲▲▲▲

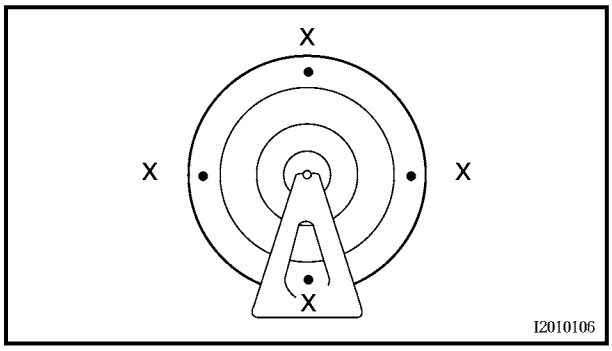

4. Check:
   - front wheel static balance

▼▼▼▼▼▼▼▼▼▼▼▼▼▼▼▼▼▼▼▼▼▼▼▼▼▼▼▼▼▼

a. Turn the front wheel and make sure it stays at each position shown.

b. If the front wheel does not remain stationary at all of the positions, rebalance it.

▲▲▲▲▲▲▲▲▲▲▲▲▲▲▲▲▲▲▲▲▲▲▲▲▲▲▲▲▲▲

EAS00550

REAR WHEEL, BRAKE DISC AND REAR WHEEL PULLEY

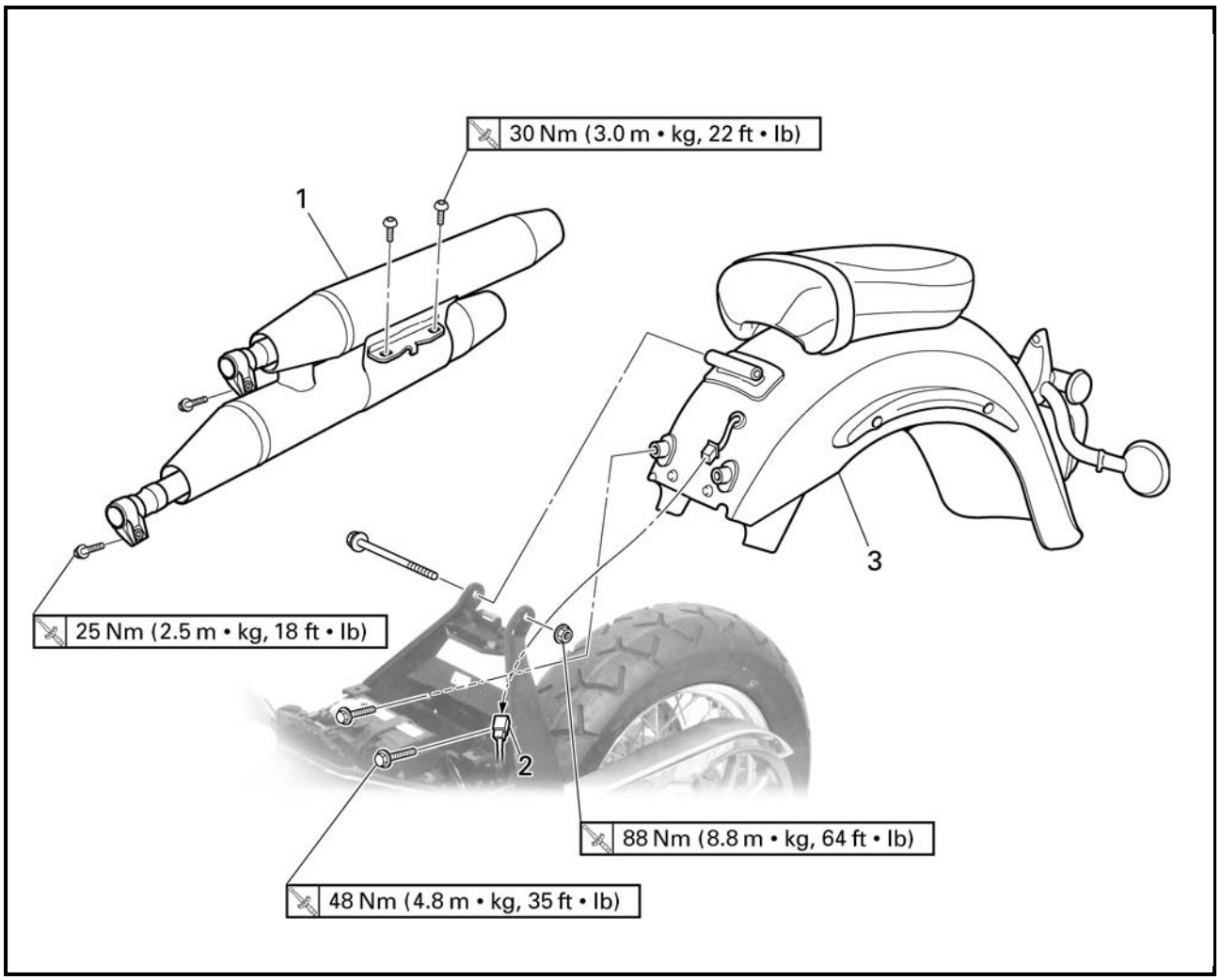

Order	Job/Part	Q'ty	Remarks
	Removing the rear fender and muffler		Remove the parts in the order listed.
	Rider seat		Refer to "SEATS AND SIDE COVERS" in chapter 3.
1	Muffler	1	
2	Tail/brake light and turn signal light sub-wire harness	1	Disconnect.
3	Rear fender assembly	1	
			For installation, reverse the removal procedure.

EAS00550

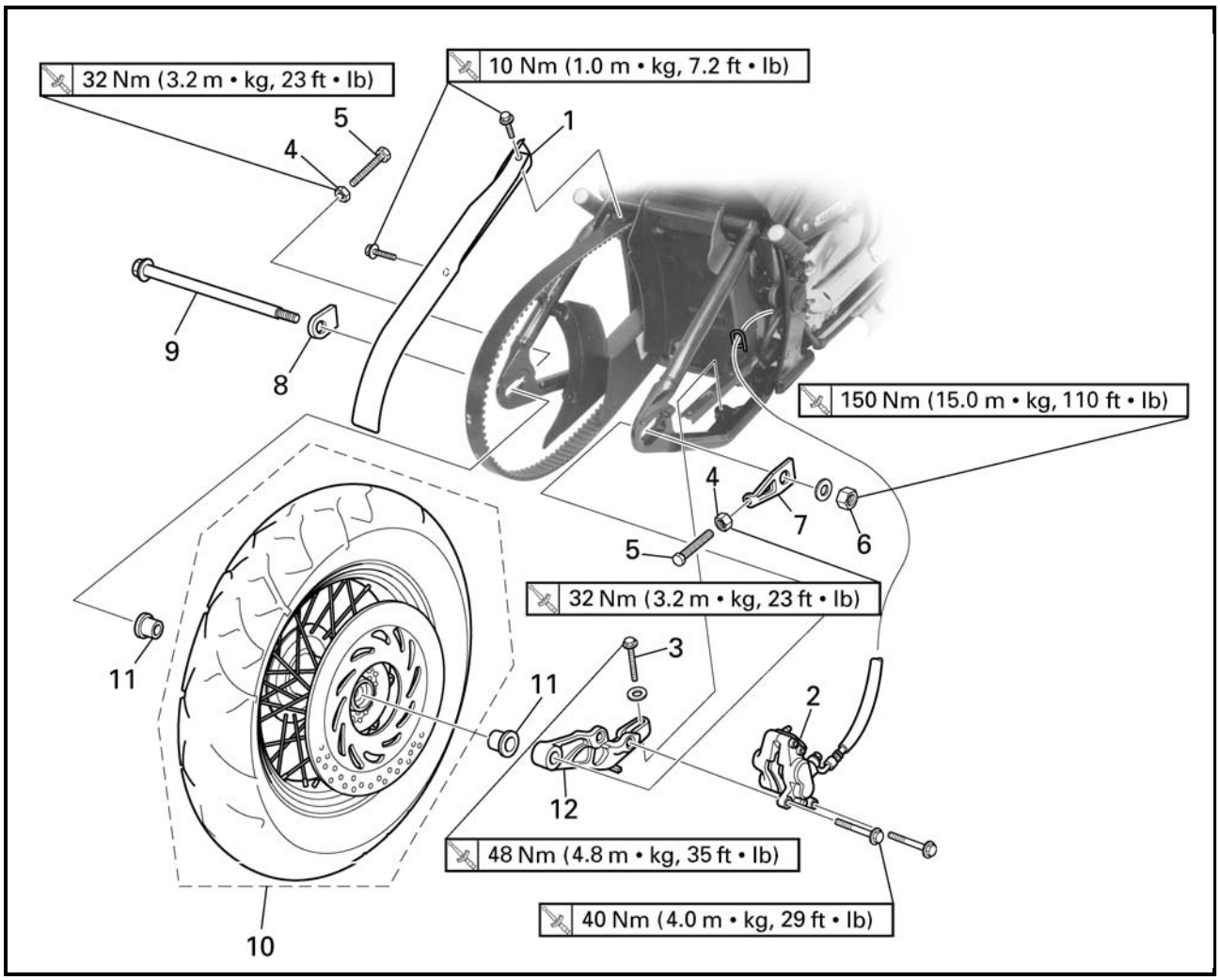

Order	Job/Part	Q'ty	Remarks
	Removing the rear wheel		Remove the parts in the order listed. **NOTE:** Place the motorcycle on a suitable stand so that the rear wheel is elevated.
1	Upper drive belt cover	1	
2	Brake caliper	1	
3	Brake caliper bracket bolt	1	
4	Locknut (left and right)	2	Loosen.
5	Adjusting bolt (left and right)	2	Loosen.
6	Wheel axle nut	1	
7	Right adjusting plate	1	
8	Left adjusting plate	1	
9	Rear wheel axle	1	

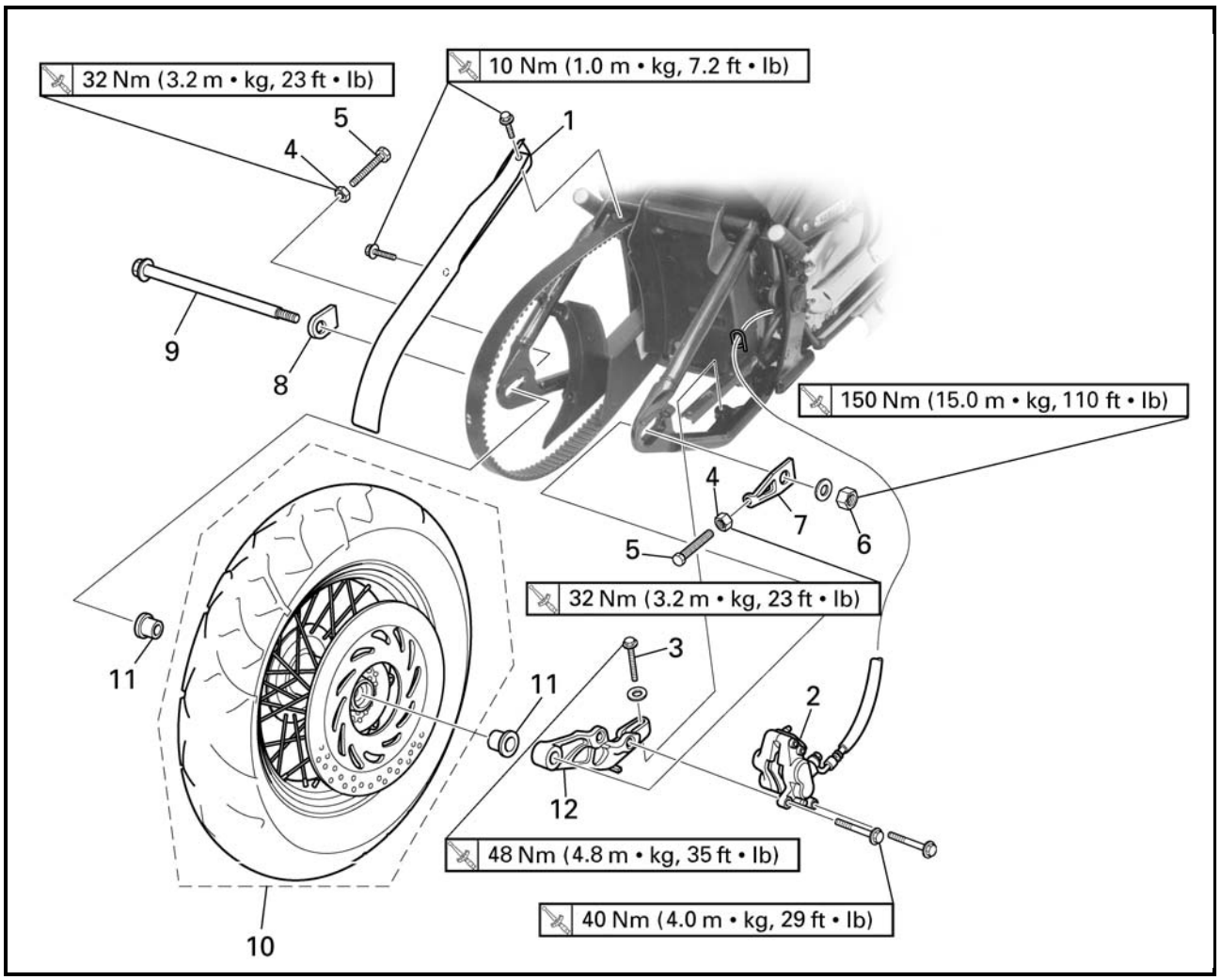

Order	Job/Part	Q'ty	Remarks
10	Rear wheel	1	
11	Collar (left and right)	2	
12	Brake caliper bracket	1	
			For installation, reverse the removal procedure.

EAS00556

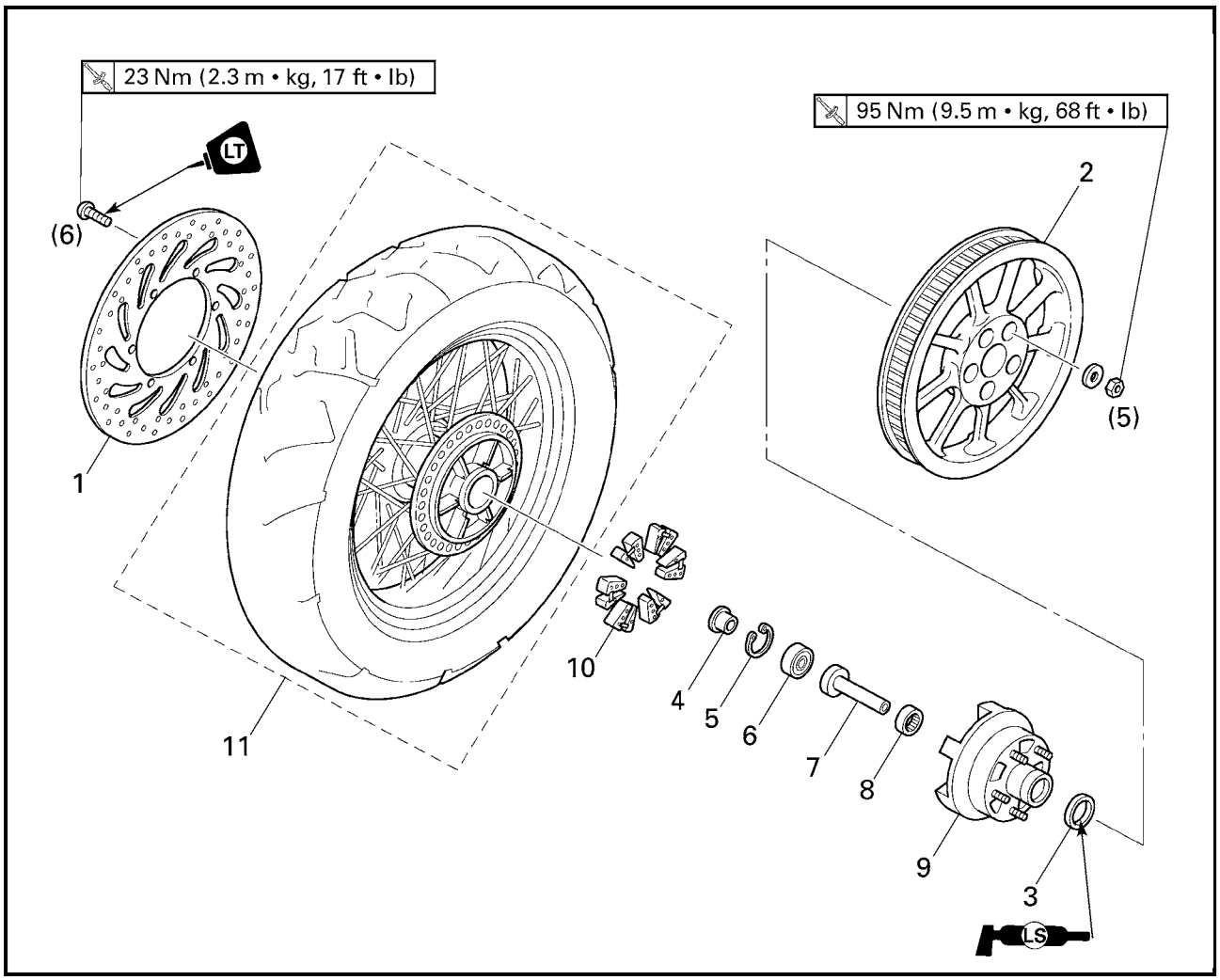

Order	Job/Part	Q'ty	Remarks
	Removing the brake disc and rear wheel pulley		Remove the parts in the order listed.
1	Brake disc	1	
2	Rear wheel pulley	1	
3	Oil seal	1	
4	Collar	1	
5	Circlip	1	
6	Bearing	1	
7	Collar	1	
8	Bearing	1	
9	Rear wheel drive hub	1	
10	Rear wheel drive hub damper	6	
11	Rear wheel	1	
			For installation, reverse the removal procedure.

EAS00560

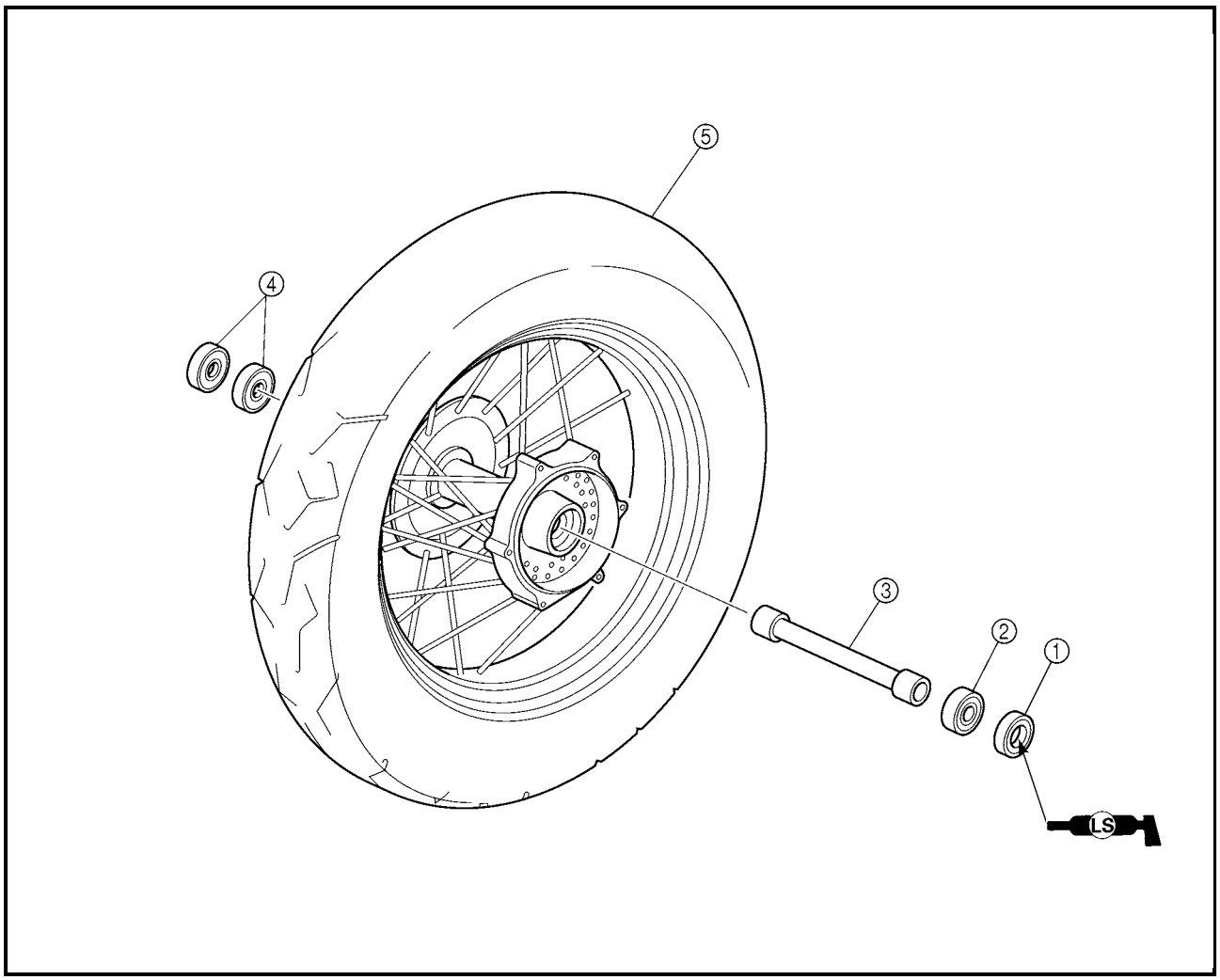

Order	Job/Part	Q'ty	Remarks
	Disassembling the rear wheel		Remove the parts in the order listed.
①	Oil seal	1	
②	Bearing	1	
③	Spacer	1	
④	Bearing	4	
			For assembly, reverse the disassembly procedure.

EAS00561
REMOVING THE REAR WHEEL

1. Stand the motorcycle on a level surface.

WARNING

Securely support the motorcycle so that there is no danger of it falling over.

NOTE:
Place the motorcycle on a suitable stand so that the rear wheel is elevated.

2. Remove:
   - brake caliper

NOTE:
Do not depress the brake pedal when removing the brake caliper.

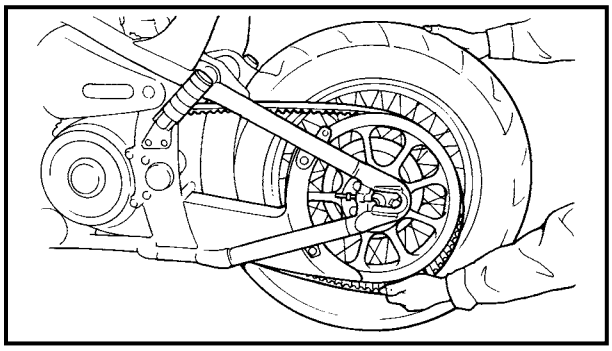

3. Remove:
   - rear wheel

NOTE:
Push the rear wheel forward and remove the drive belt from the rear wheel pulley.

EAS00566
CHECKING THE REAR WHEEL

1. Check:
   - wheel axle
   - rear wheel
   - wheel bearings
   - oil seals

   Refer to "FRONT WHEEL AND BRAKE DISCS".

2. Check:
   - tire
   - rear wheel

   Damage/wear → Replace.
   Refer to "CHECKING THE TIRES" and "CHECKING THE WHEELS" in chapter 3.

3. Check:
   - spokes
     Refer to "FRONT WHEEL AND BRAKE DISCS".

4. Measure:
   - radial wheel runout
   - lateral wheel runout
     Refer to "FRONT WHEEL AND BRAKE DISCS".

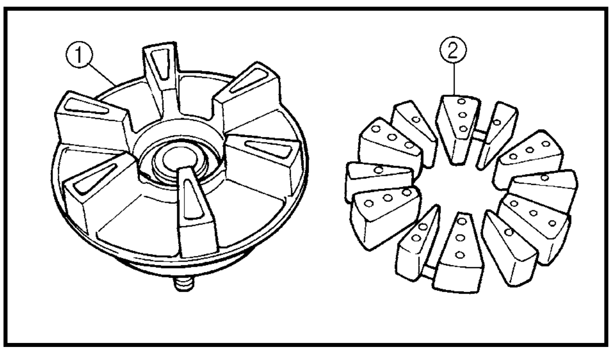

EAS00567
CHECKING THE REAR WHEEL DRIVE HUB
1. Check:
   - rear wheel drive hub ①
     Cracks/damage → Replace.
   - rear wheel drive hub dampers ②
     Damage/wear → Replace.

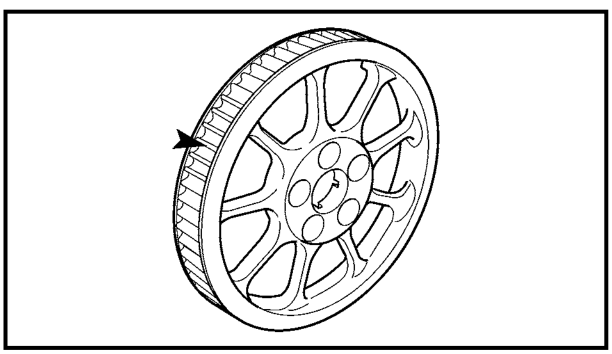

EAS00568
CHECKING AND REPLACING THE REAR WHEEL PULLEY
1. Check:
   - rear wheel pulley
     Surface plating has come off → Replace the rear wheel pulley.
     Bent teeth → Replace the rear wheel pulley.

2. Replace:
   - rear wheel pulley

▼▼▼▼▼▼▼▼▼▼▼▼▼▼▼▼▼▼▼▼▼▼▼▼▼▼▼▼▼▼▼

a. Remove the self-locking nuts and the rear wheel pulley.
b. Clean the rear wheel drive hub with a clean cloth, especially the surfaces that contact the pulley.
c. Install the new rear wheel pulley.

	Rear wheel pulley self-locking nut 95 Nm (9.5 m • kg, 68 ft • lb)

NOTE:
Tighten the self-locking nuts in stages and in a crisscross pattern.

▲▲▲▲▲▲▲▲▲▲▲▲▲▲▲▲▲▲▲▲▲▲▲▲▲▲▲▲▲▲

ASSEMBLING THE REAR WHEEL

1. Install:
   - bearings
   - spacer
   - bearing
   - oil seal New
     Refer to "FRONT WHEEL AND BRAKE DISCS".

EAS00572
INSTALLING THE REAR WHEEL

1. Lubricate:
   - oil seal lips

	Recommended lubricant Lithium soap base grease

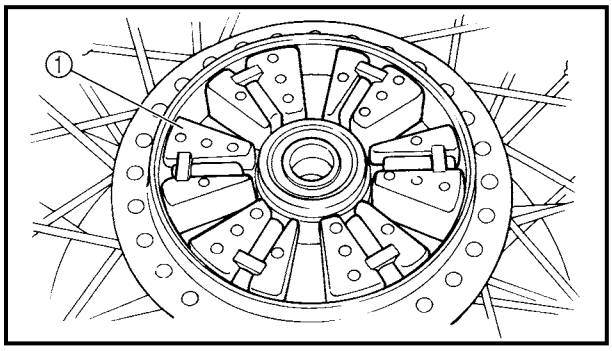

2. Install:
   - rear wheel drive hub dampers ①

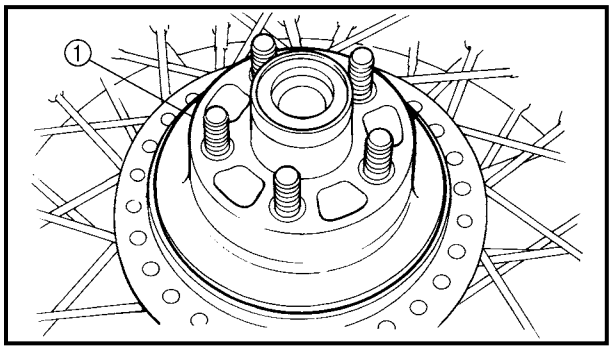

3. Install:
   - rear wheel drive hub assembly ①

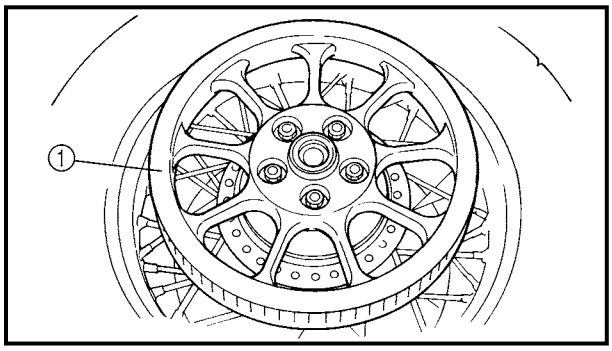

4. Install:
   - rear wheel pulley ①

	95 Nm (9.5 m · kg, 68 ft · lb)

NOTE:
Tighten the self-locking nuts in stages and in a crisscross pattern.

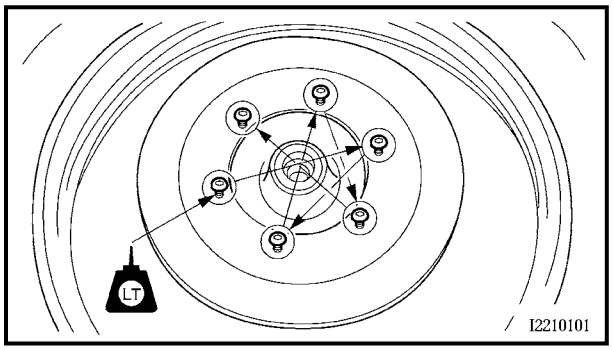

5. Install:
   - brake disc

NOTE:
- Apply locking agent (LOCTITE® 648) to the threads of the brake disc bolts.
- Tighten the brake disc bolts in stages and in a crisscross pattern.

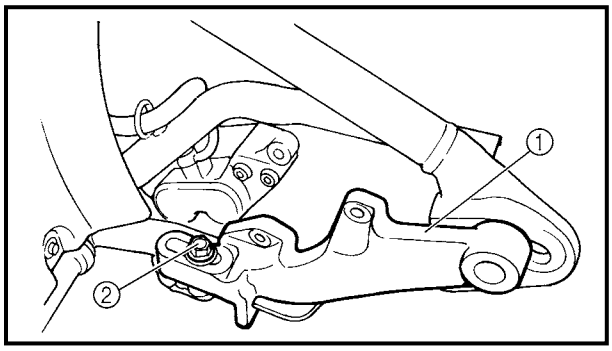

6. Install:
   - brake caliper bracket ①
   - washer
   - brake caliper bracket bolt ②

NOTE:
Temporarily tighten the brake caliper bracket bolt.

7. Install:
   - collars
   - rear wheel
   - adjusting plates
   - rear wheel axle
   - washer
   - wheel axle nut

NOTE:
Temporarily tighten the wheel axle nut.

8. Adjust:
   - drive belt slack
     Refer to "ADJUSTING THE DRIVE BELT SLACK" in chapter 3.

9. Tighten:
   - wheel axle nut

     150 Nm (15.0 m · kg, 110 ft · lb)
   - brake caliper bracket bolt

     48 Nm (4.8 m · kg, 35 ft · lb)

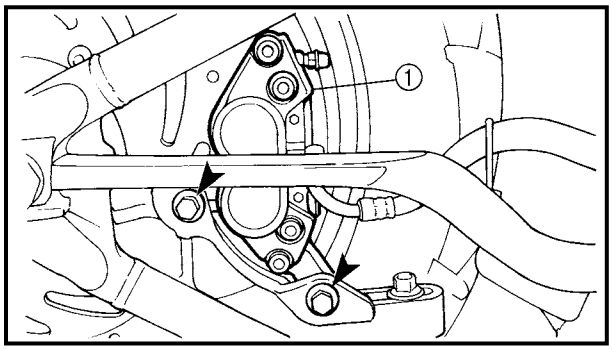

10. Install:
    - brake caliper ①

      40 Nm (4.0 m · kg, 29 ft · lb)

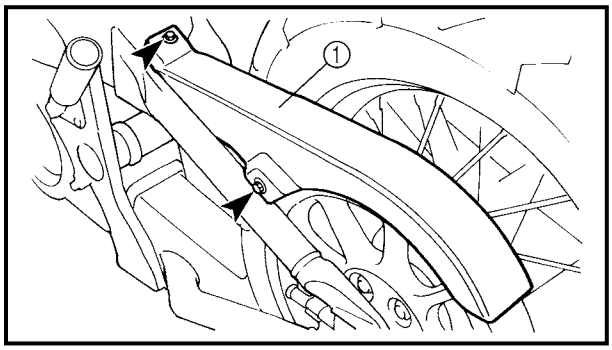

11. Install:
    - upper drive belt cover ①

      10 Nm (1.0 m · kg, 7.2 ft · lb)

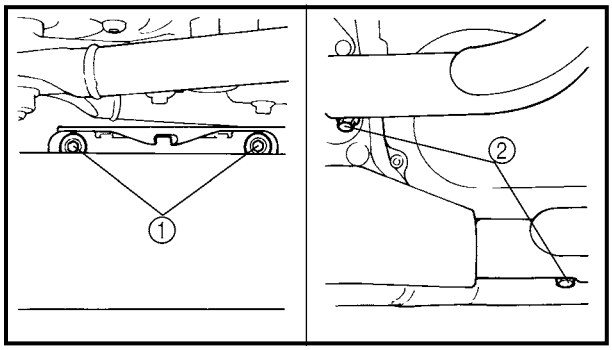

12. Install:
    - muffler
13. Tighten:
    - muffler mounting bolt ①

      30 Nm (3.0 m · kg, 22 ft · lb)
    - Clamp bolt ②

      25 Nm (2.5 m · kg, 18 ft · lb)

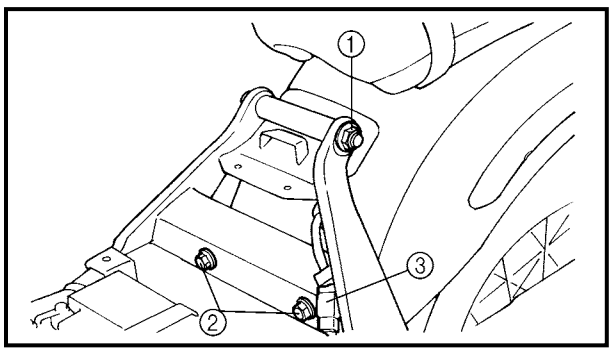

14. Install:
    - rear fender assembly
15. Tighten:
    - nut ①

      88 Nm (8.8 m · kg, 64 ft · lb)
    - bolts ②

      48 Nm (4.8 m · kg, 35 ft · lb)
16. Connect:
    - tail/brake light and turn signal light sub-wire harness coupler ③

17. Install:
- rider seat
  Refer to "SEATS AND SIDE COVERS" in chapter 3.

EAS00575
ADJUSTING THE REAR WHEEL STATIC BALANCE

NOTE:
- After replacing the tire, wheel, or both, the rear wheel static balance should be adjusted.
- Adjust the rear wheel static balance with the brake disc and rear wheel drive hub installed.

1. Adjust:
   - rear wheel static balance
     Refer to "FRONT WHEEL AND BRAKE DISCS".

EAS00577

FRONT AND REAR BRAKES

FRONT BRAKE PADS

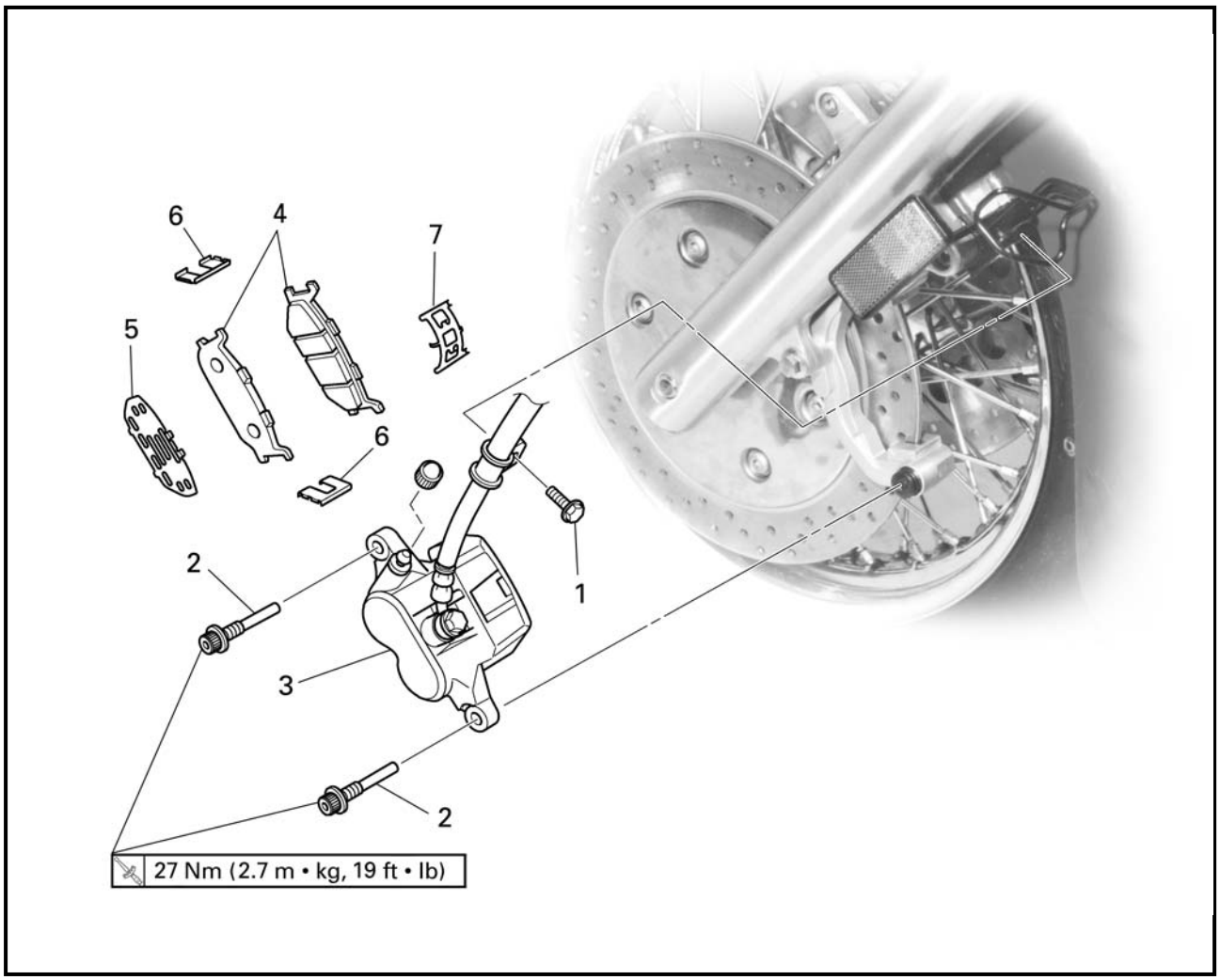

Order	Job/Part	Q'ty	Remarks
	Removing the front brake pads		Remove the parts in the order listed. The following procedure applies to both of the front brake calipers.
1	Brake hose holder bolt	1	
2	Retaining bolt	2	
3	Brake caliper	1	
4	Brake pad	2	
5	Brake pad shim	1	
6	Brake pad spring	2	
7	Brake pad spring	1	
			For installation, reverse the removal procedure.

EAS00578
REAR BRAKE PADS

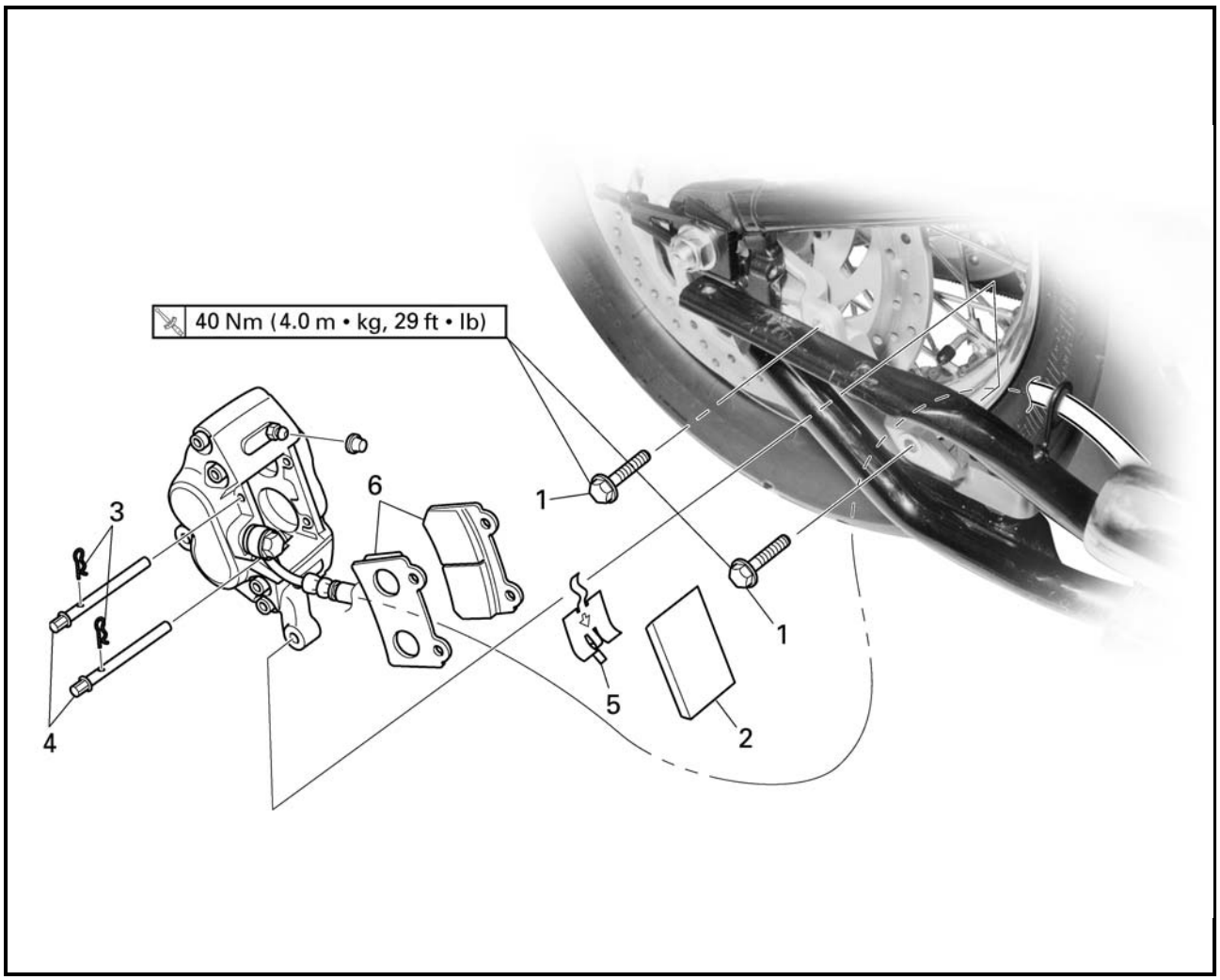

Order	Job/Part	Q'ty	Remarks
	Removing the rear brake pads		Remove the parts in the order listed.
	Muffler		Refer to "REAR WHEEL, BRAKE DISC AND REAR WHEEL PULLEY".
1	Brake caliper bolt	2	
2	Brake pad cover	1	
3	Brake pad clip	2	
4	Brake pad pin	2	
5	Brake pad spring	1	
6	Brake pad	2	
			For installation, reverse the removal procedure.

EAS00579

CAUTION:

Disc brake components rarely require disassembly.
Therefore, always follow these preventive measures:

- **Never disassemble brake components unless absolutely necessary.**
- **If any connection on the hydraulic brake system is disconnected, the entire brake system must be disassembled, drained, cleaned, properly filled, and bled after reassembly.**
- **Never use solvents on internal brake components.**
- **Use only clean or new brake fluid for cleaning brake components.**
- **Brake fluid may damage painted surfaces and plastic parts. Therefore, always clean up any spilt brake fluid immediately.**
- **Avoid brake fluid coming into contact with the eyes as it can cause serious injury.**

FIRST AID FOR BRAKE FLUID ENTERING THE EYES:

- **Flush with water for 15 minutes and get immediate medical attention.**

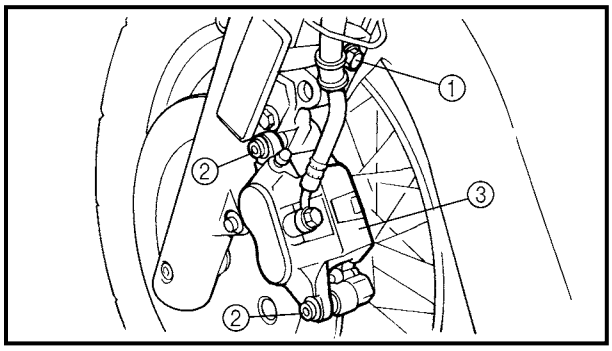

EAS00580

REPLACING THE FRONT BRAKE PADS

The following procedure applies to both brake calipers.

NOTE:

When replacing the brake pads, it is not necessary to disconnect the brake hose or disassemble the brake caliper.

1. Remove:
   - brake hose holder bolt ①
   - brake caliper retaining bolts ②
   - brake caliper ③

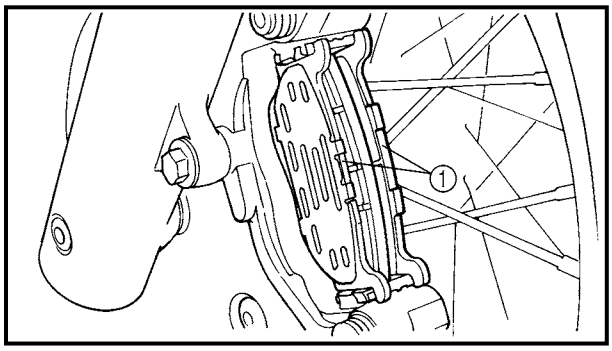

2. Remove:
   - brake pads ①
     (along with the brake pad shim)
   - brake pad springs

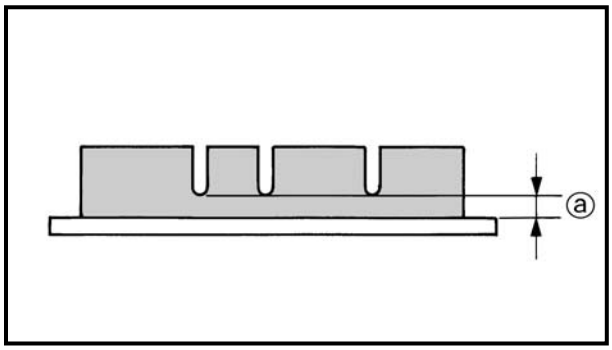

3. Measure:
   - brake pad thickness ⓐ
     Out of specification → Replace the brake pads as a set.

	Minimum brake pad thickness **0.5 mm (0.02 in)**

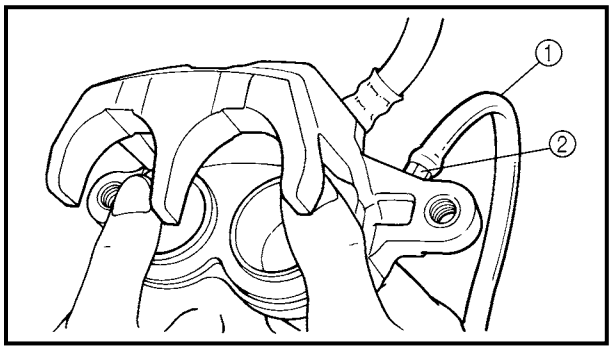

4. Install:
   - brake pads
   - brake pad springs

NOTE:
Always install new brake pads, brake pad shim and a new brake pad springs as a set.

▼▼▼▼▼▼▼▼▼▼▼▼▼▼▼▼▼▼▼▼▼▼▼▼▼▼▼▼▼▼

a. Connect a clear plastic hose ① tightly to the bleed screw ②. Put the other end of the hose into an open container.

b. Loosen the bleed screw and push the brake caliper pistons into the brake caliper with your finger.

c. Tighten the bleed screw.

	Bleed screw **6 Nm (0.6 m • kg, 4.3 ft • lb)**

d. Install a new brake pad shim onto the new brake pad that is on the caliper piston side.

▲▲▲▲▲▲▲▲▲▲▲▲▲▲▲▲▲▲▲▲▲▲▲▲▲▲▲▲▲▲

5. Lubricate:
   - brake caliper retaining bolt

	Recommended lubricant **Lithium soap base grease**

CAUTION:

- **Do not allow grease to contact the brake pads.**
- **Remove any excess grease.**

6. Install:
   - brake caliper
   - brake caliper retaining bolts

	27 Nm (2.7 m · kg, 19 ft · lb)

   - brake hose holder bolt

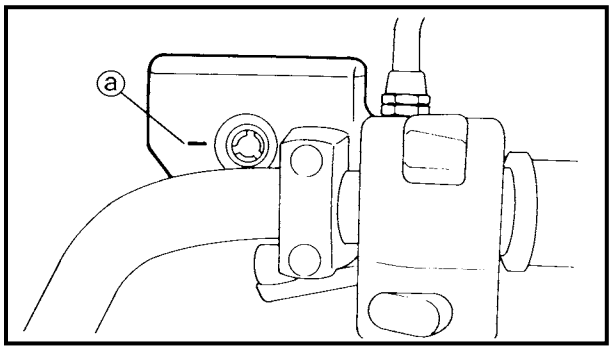

7. Check:
   - brake fluid level
     Below the minimum level mark ⓐ → Add the recommended brake fluid to the proper level.
     Refer to "CHECKING THE BRAKE FLUID LEVEL" in chapter 3.

8. Check:
   - brake lever operation
     Soft or spongy feeling → Bleed the brake system.
     Refer to "BLEEDING THE HYDRAULIC BRAKE SYSTEM" in chapter 3.

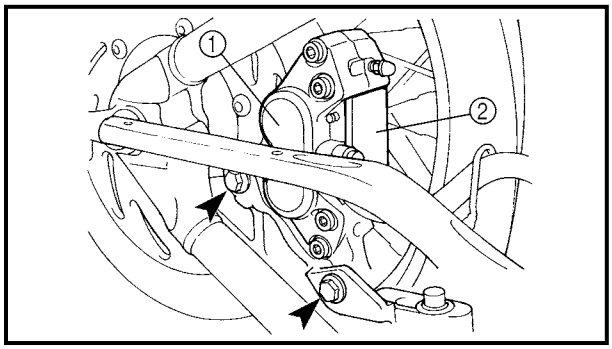

EAS00583
REPLACING THE REAR BRAKE PADS

NOTE:
When replacing the brake pads, it is not necessary to disconnect the brake hose or disassemble the brake caliper.

1. Remove:
   - brake caliper ①
   - brake pad cover ②

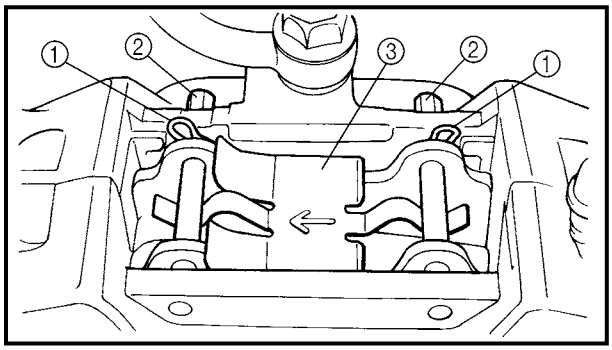

2. Remove:
   - brake pad clips ①
   - brake pad pins ②
   - brake pad spring ③

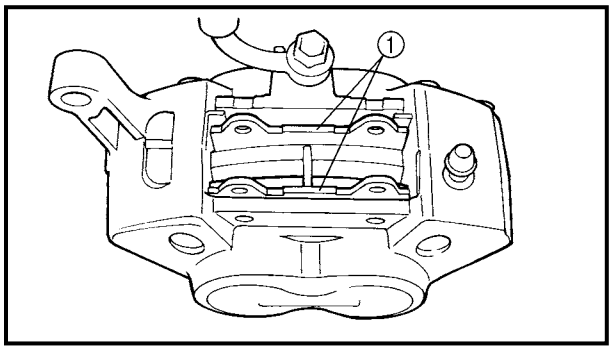

3. Remove:
   - brake pads ①

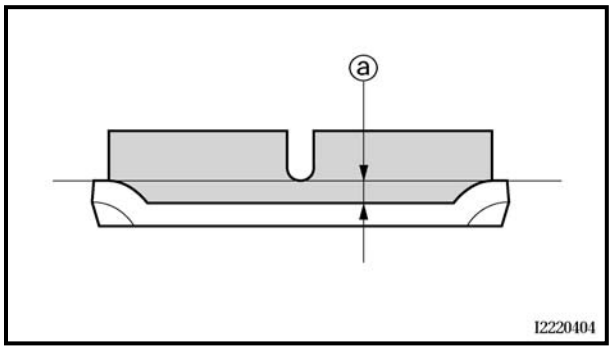

4. Measure:
   - brake pad thickness ⓐ
     Out of specification → Replace the brake pads as a set.

	Minimum brake pad thickness 0.5 mm (0.02 in)

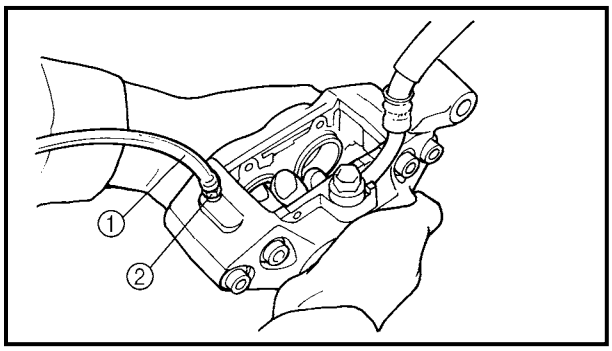

5. Install:
   - brake pads
   - brake pad spring

NOTE:
Always install new brake pads and a brake pad spring as a set.

▼▼▼▼▼▼▼▼▼▼▼▼▼▼▼▼▼▼▼▼▼▼▼▼▼▼▼▼▼▼▼▼

a. Connect a clear plastic hose ① tightly to the bleed screw ②. Put the other end of the hose into an open container.

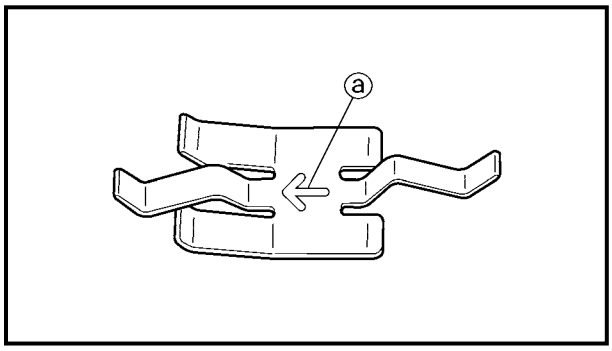

b. Loosen the bleed screw and push the brake caliper pistons into the brake caliper with your finger.

c. Tighten the bleed screw.

	Bleed screw **6 Nm (0.6 m • kg, 4.3 ft • lb)**

d. Install new brake pads and a new brake pad spring.

NOTE:

The arrow ⓐ on the brake pad spring must point in the direction of disc rotation.

▲▲▲▲▲▲▲▲▲▲▲▲▲▲▲▲▲▲▲▲▲▲▲▲▲▲▲▲

6. Install:
   - brake pad pins
   - brake pad clips
   - brake pad cover
   - brake caliper

	40 Nm (4.0 m · kg, 29 ft · lb)

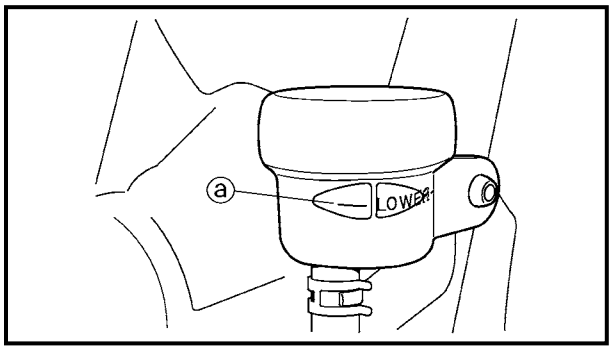

7. Check:
   - brake fluid level
     Below the minimum level mark ⓐ → Add the recommended brake fluid to the proper level.
     Refer to "CHECKING THE BRAKE FLUID LEVEL" in chapter 3.

8. Check:
   - brake pedal operation
     Soft or spongy feeling → Bleed the brake system.
     Refer to "BLEEDING THE HYDRAULIC BRAKE SYSTEM" in chapter 3.

EAS00584
FRONT BRAKE MASTER CYLINDER

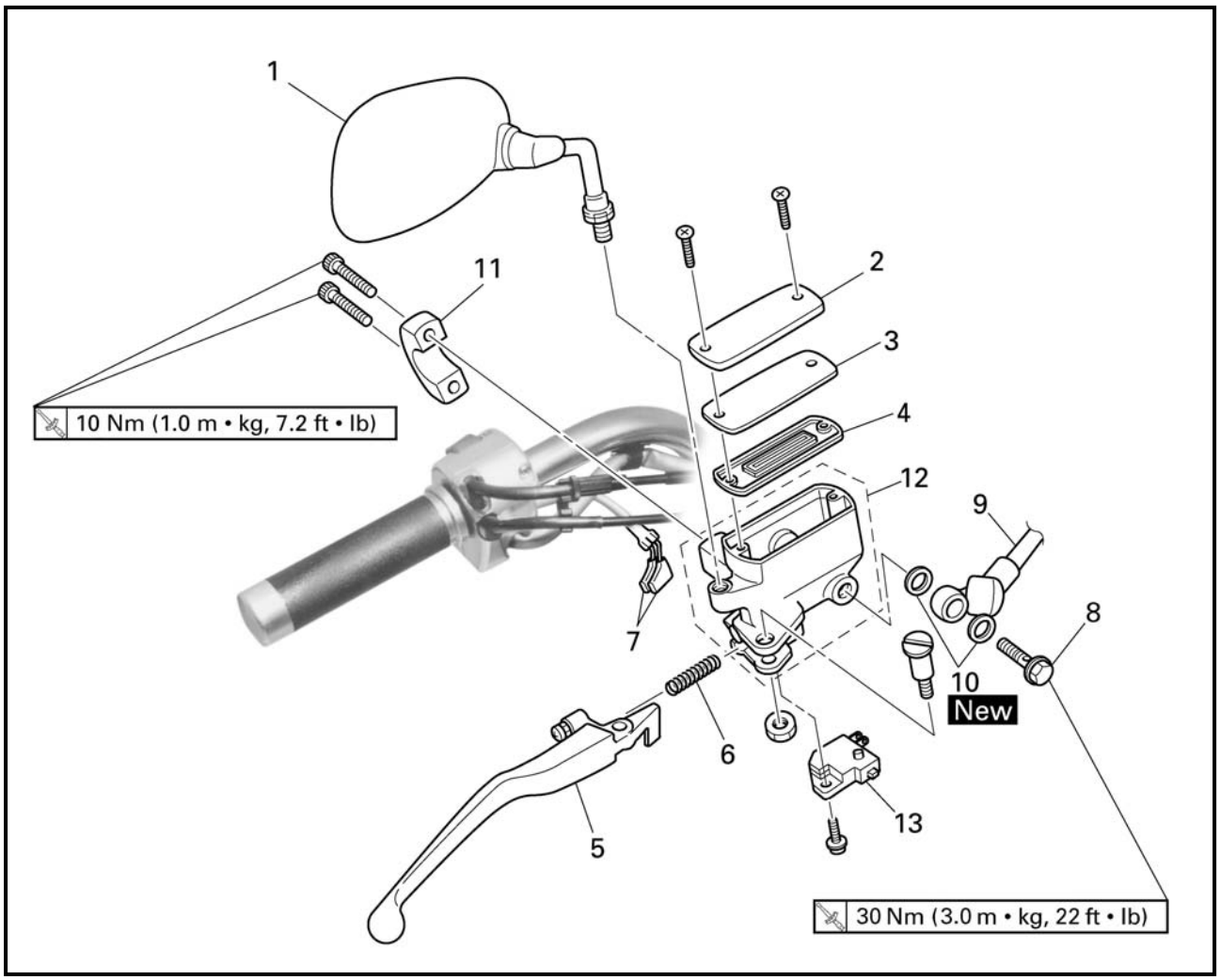

Order	Job/Part	Q'ty	Remarks
	Removing the front brake master cylinder		Remove the parts in the order listed.
	Brake fluid		Drain.
1	Rear view mirror	1	
2	Brake master cylinder reservoir cap	1	
3	Brake master cylinder reservoir diaphragm holder	1	
4	Brake master cylinder reservoir diaphragm	1	
5	Brake lever	2	
6	Brake lever spring	1	
7	Front brake light switch connector	2	Disconnect.
8	Union bolt	1	
9	Brake hose	1	Disconnect.
10	Copper washer	2	

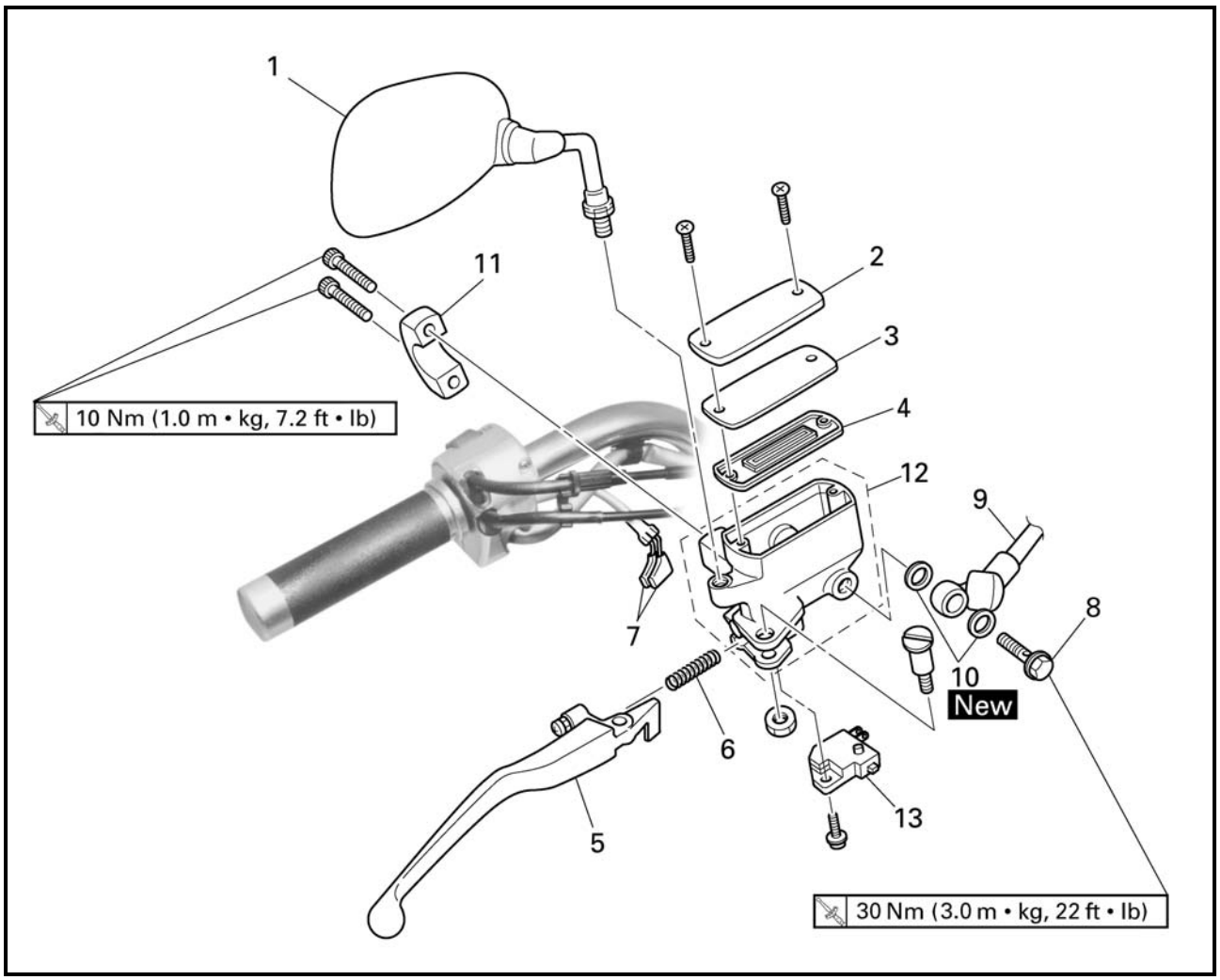

Order	Job/Part	Q'ty	Remarks
11	Brake master cylinder holder	1	
12	Brake master cylinder	1	
13	Front brake light switch	1	
			For installation, reverse the removal procedure.

EAS00585

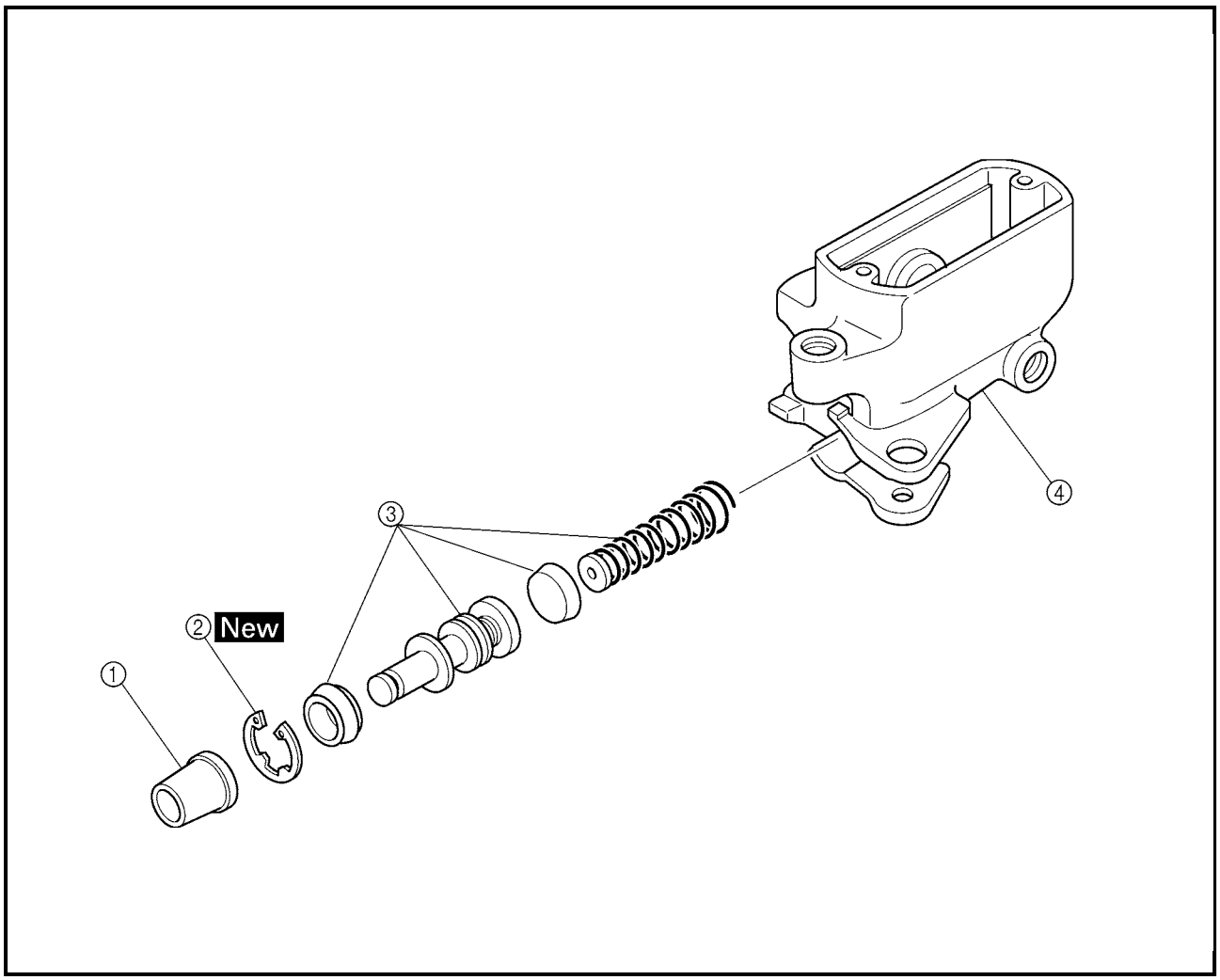

Order	Job/Part	Q'ty	Remarks
	Disassembling the front brake master cylinder		Remove the parts in the order listed.
①	Dust boot	1	
②	Circlip	1	
③	Brake master cylinder kit	1	
④	Brake master cylinder	1	
			For assembly, reverse the disassembly procedure.

EAS00586
REAR BRAKE MASTER CYLINDER

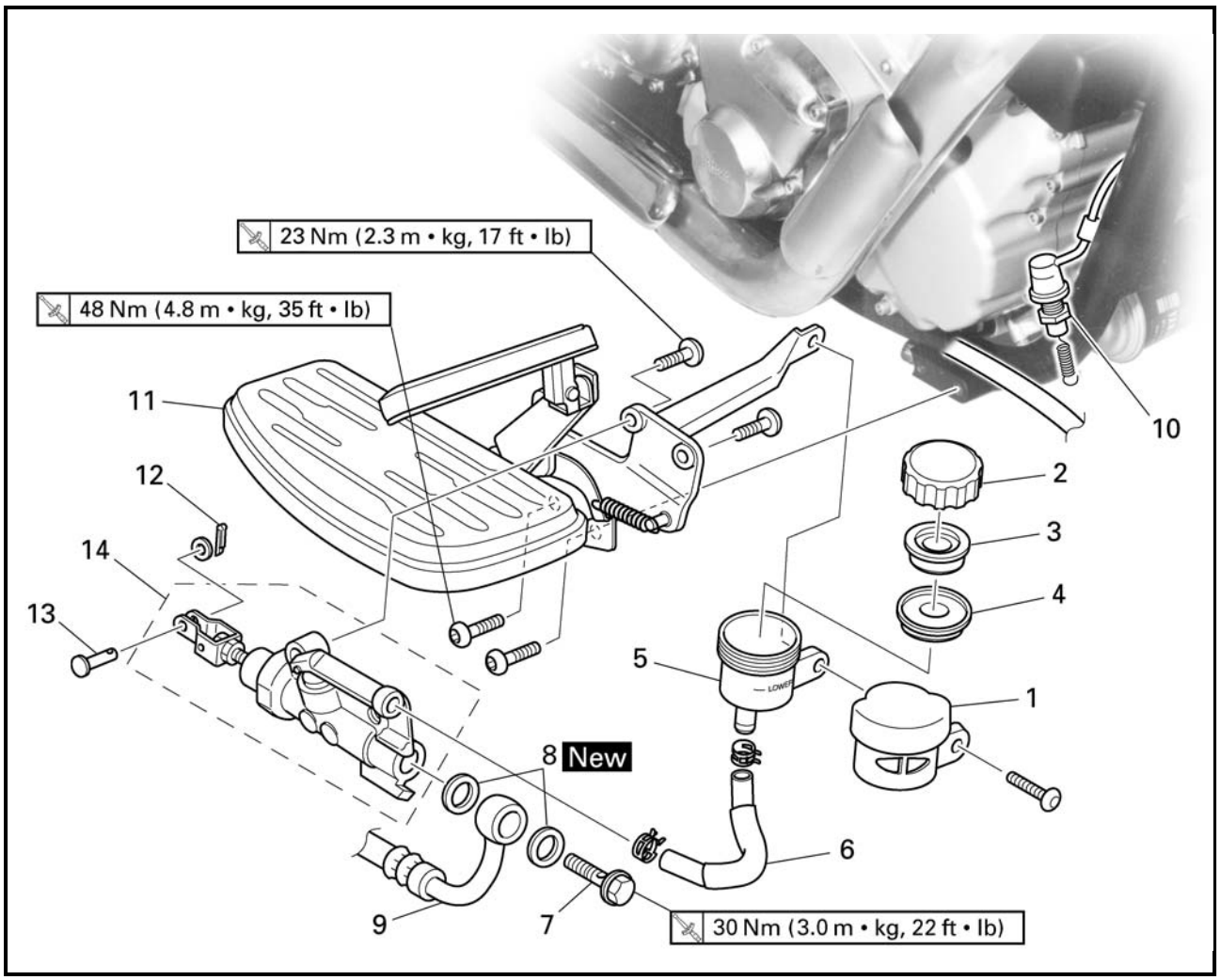

Order	Job/Part	Q'ty	Remarks
	Removing the rear brake master cylinder		Remove the parts in the order listed.
	Brake fluid		Drain.
1	Brake fluid reservoir cover	1	
2	Brake fluid reservoir cap	1	
3	Brake fluid reservoir diaphragm holder	1	
4	Brake fluid reservoir diaphragm	1	
5	Brake fluid reservoir	1	
6	Brake fluid reservoir hose	1	
7	Union bolt	1	
8	Copper washer	2	
9	Brake hose	1	Disconnect.
10	Rear brake light switch	1	Disconnect.

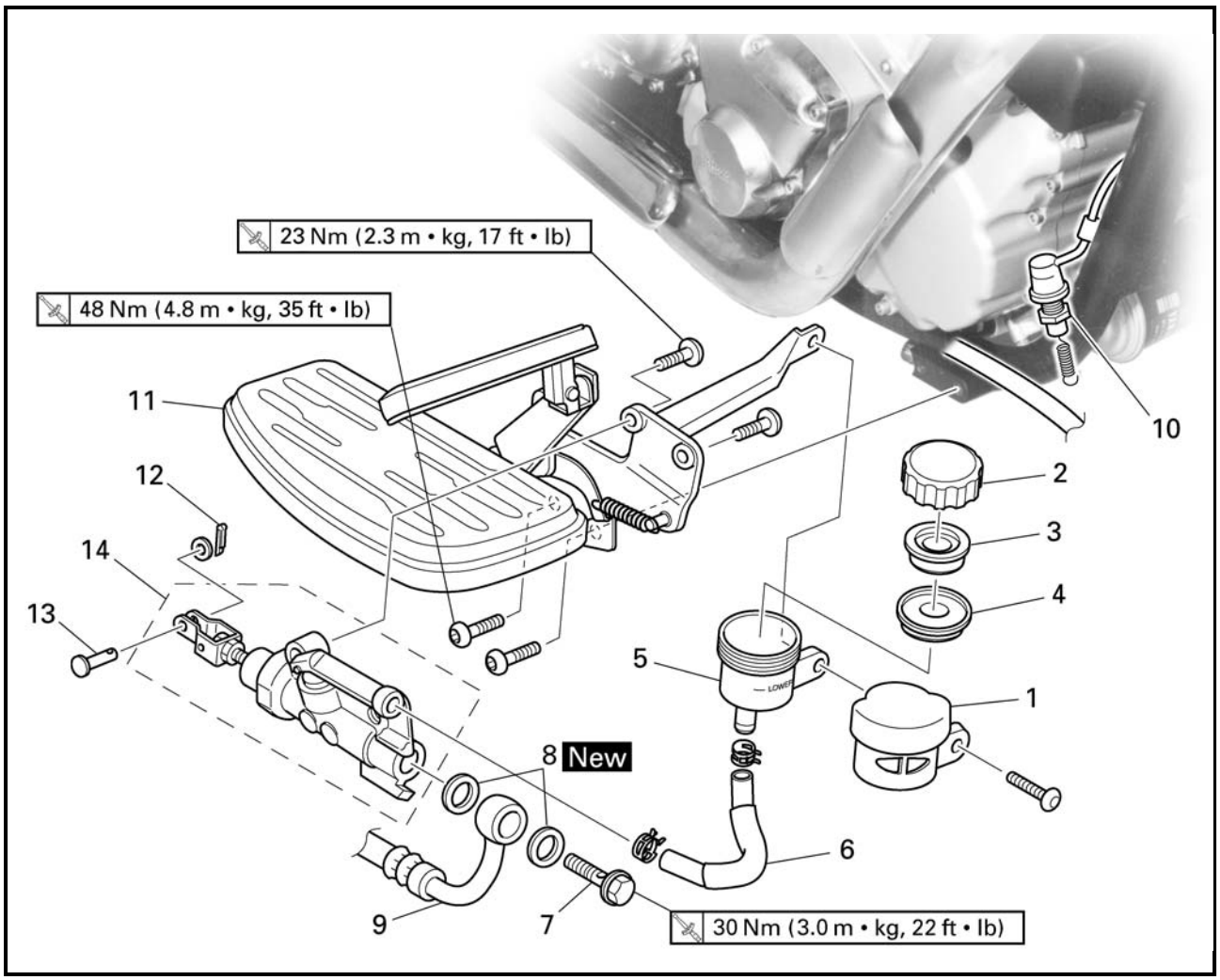

Order	Job/Part	Q'ty	Remarks
11	Left footrest assembly	1	
12	Cotter pin	1	
13	Pin	1	
14	Brake master cylinder	1	
			For installation, reverse the removal procedure.

EAS00587

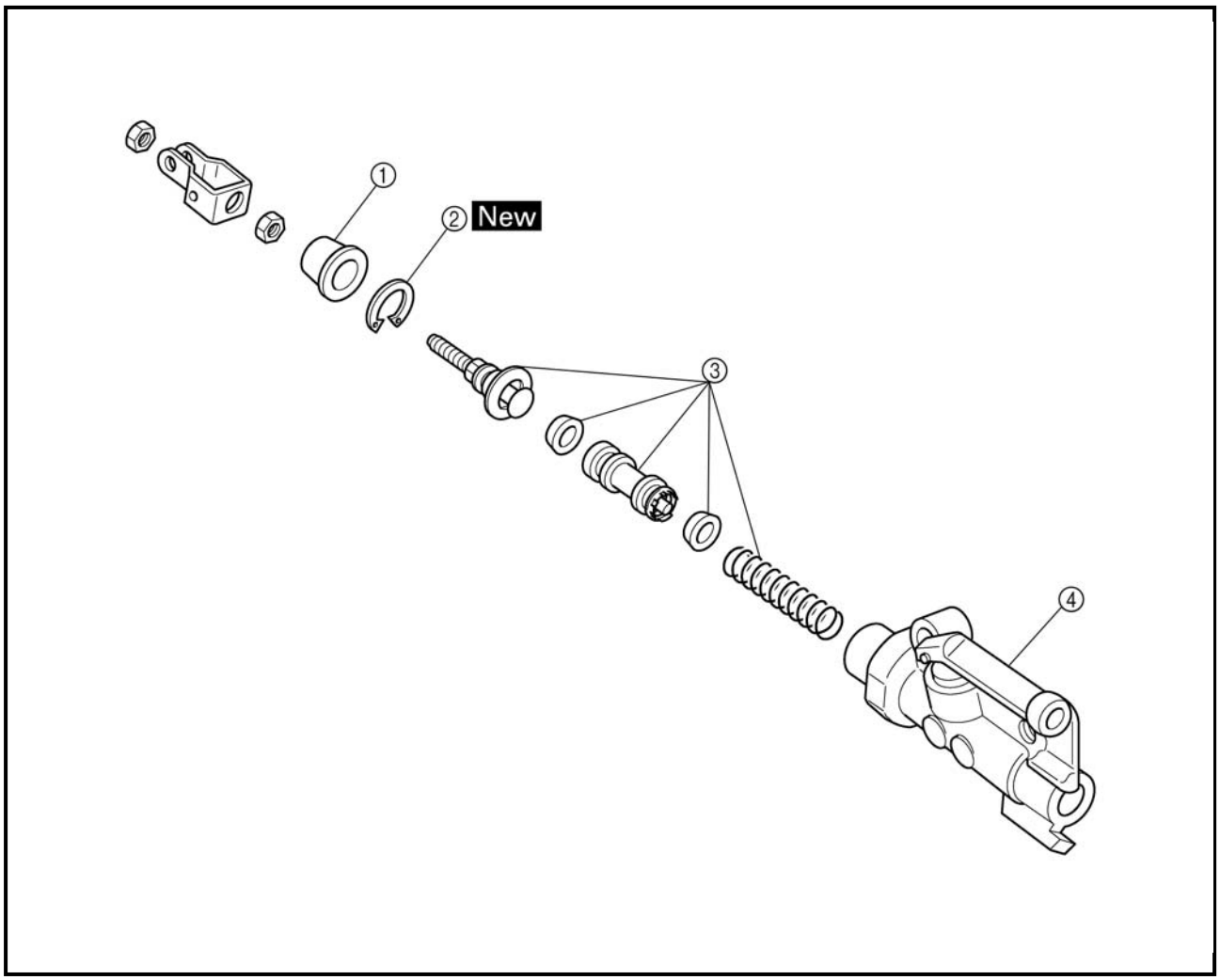

Order	Job/Part	Q'ty	Remarks
	Disassembling the rear brake master cylinder		Remove the parts in the order listed.
①	Dust boot	1	
②	Circlip	1	
③	Brake master cylinder kit	1	
④	Brake master cylinder	1	
			For assembly, reverse the disassembly procedure.

EAS00588
DISASSEMBLING THE FRONT BRAKE MASTER CYLINDER

NOTE:
Before disassembling the front brake master cylinder, drain the brake fluid from the entire brake system.

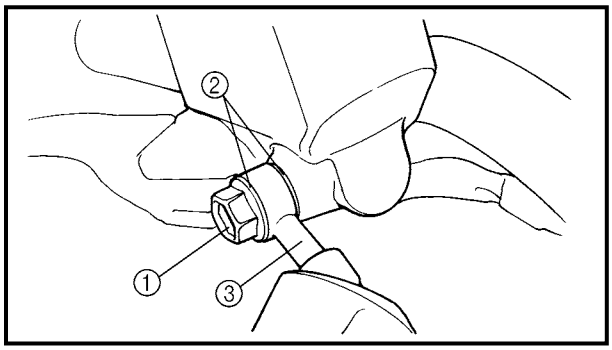

1. Remove:
   - union bolt ①
   - copper washers ②
   - brake hose ③

NOTE:
To collect any remaining brake fluid, place a container under the master cylinder and the end of the brake hose.

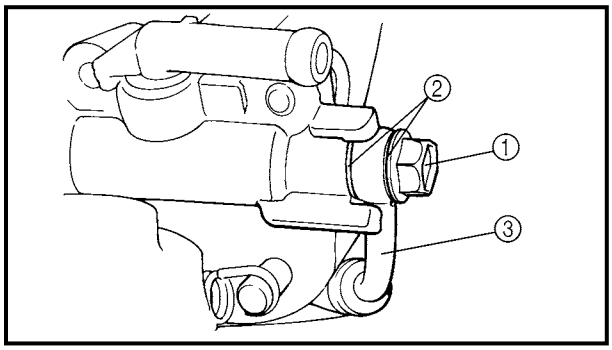

EAS00589
DISASSEMBLING THE REAR BRAKE MASTER CYLINDER

1. Remove:
   - union bolt ①
   - copper washers ②
   - brake hose ③

NOTE:
To collect any remaining brake fluid, place a container under the master cylinder and the end of the brake hose.

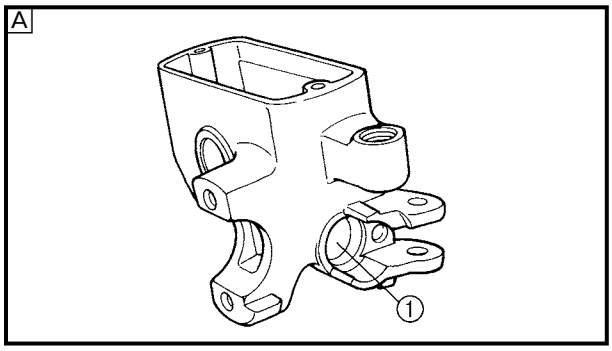

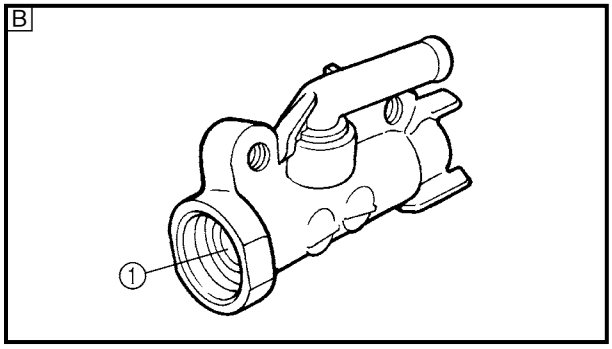

EAS00592

CHECKING THE FRONT AND REAR BRAKE MASTER CYLINDERS

The following procedure applies to both brake master cylinders.

1. Check:
   - brake master cylinder ①
     Damage/scratches/wear → Replace.
   - brake fluid delivery passages (brake master cylinder body)
     Obstruction → Blow out with compressed air.

A Front
B Rear

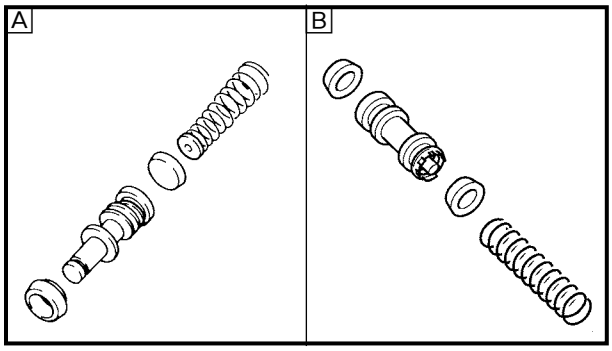

2. Check:
   - brake master cylinder kit ①
     Damage/scratches/wear → Replace.

A Front
B Rear

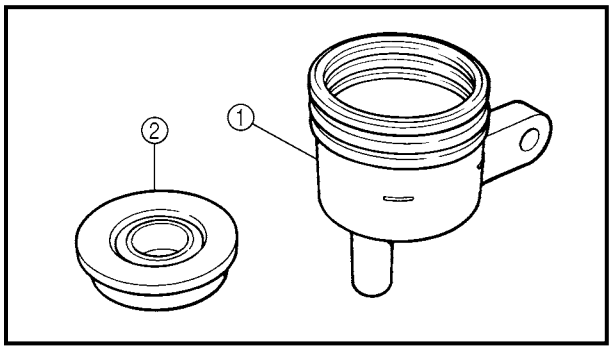

3. Check:
   - rear brake fluid reservoir ①
     Cracks/damage → Replace.
   - rear brake fluid reservoir diaphragm ②
     Cracks/damage → Replace.

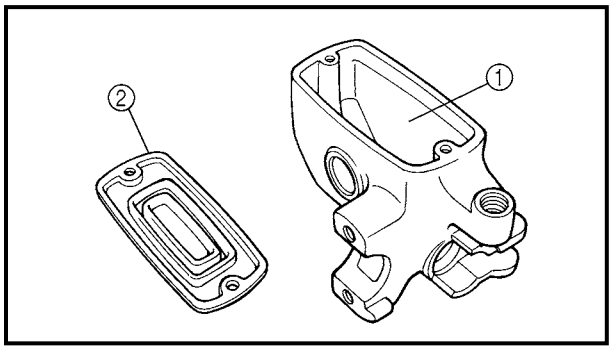

4. Check:
   - front brake master cylinder reservoir ①
     Cracks/damage → Replace.
   - front brake master cylinder reservoir diaphragm ②
     Damage/wear → Replace.

5. Check:
   - brake hoses
   - brake fluid reservoir hose
     Cracks/damage/wear → Replace.

EAS00598
ASSEMBLING AND INSTALLING THE FRONT BRAKE MASTER CYLINDER

⚠ WARNING

- **Before installation, all internal brake components should be cleaned and lubricated with clean or new brake fluid.**
- **Never use solvents on internal brake components.**

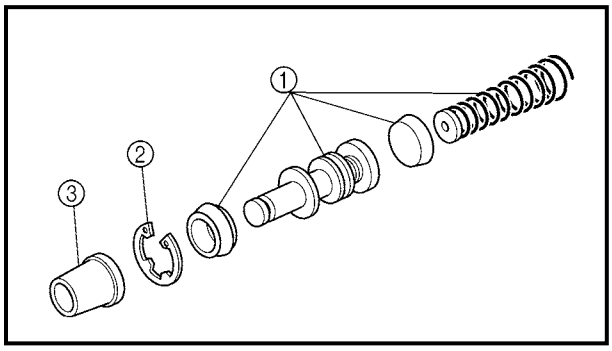

Recommended brake fluid
DOT 4

1. Install:
   - brake master cylinder kit ①
   - circlip ② New
   - dust boot ③

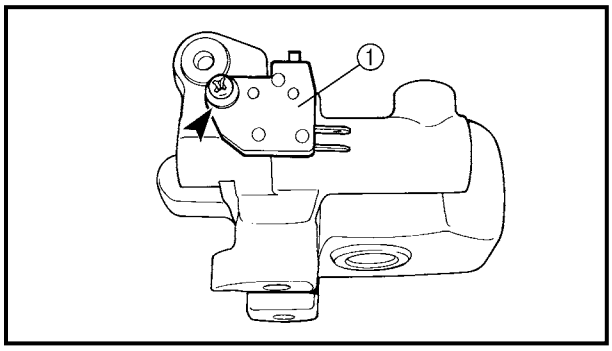

2. Install:
   - front brake light switch ①

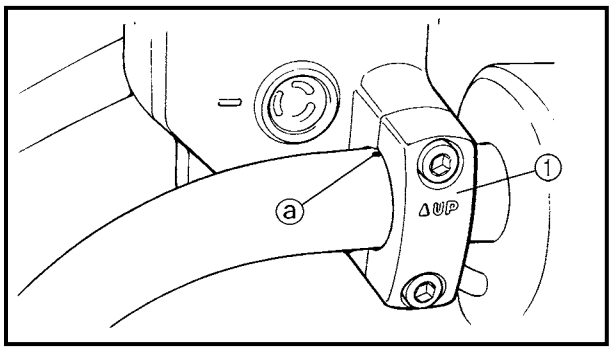

3. Install:
   - brake master cylinder
   - brake master cylinder holder ①

10 Nm (1.0 m · kg, 7.2 ft · lb)

NOTE:

- Install the brake master cylinder holder with the "UP" mark facing up.
- Align the end of the brake master cylinder holder with the punch mark ⓐ in the handlebar.
- First, tighten the upper bolt, then the lower bolt.

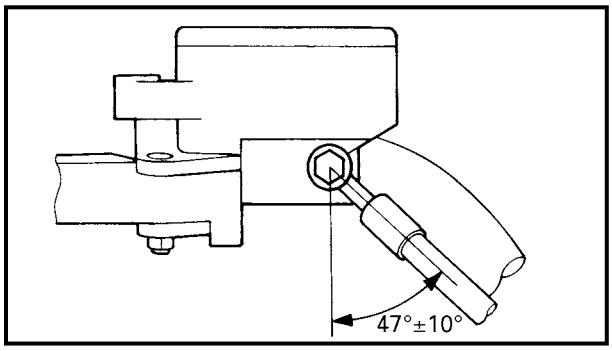

4. Install:
   - copper washers New
   - brake hose
   - union bolt 30 Nm (3.0 m · kg, 22 ft · lb)

⚠ WARNING

Proper brake hose routing is essential to insure safe motorcycle operation. Refer to "CABLE ROUTING".

NOTE:
- While holding the brake hose, tighten the union bolt as shown.
- Turn the handlebar to the left and to the right to make sure the brake hose does not touch other parts (e.g., wire harness, cables, leads). Correct if necessary.

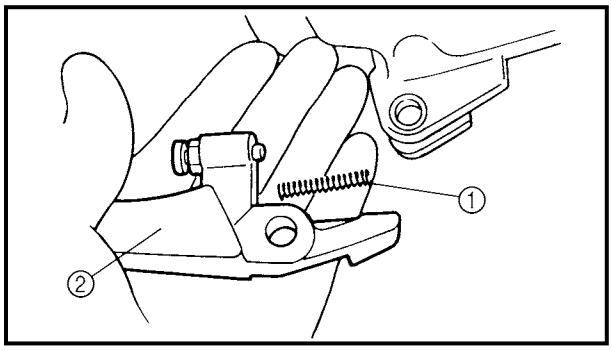

5. Install:
   - brake lever spring ①
   - brake lever ②

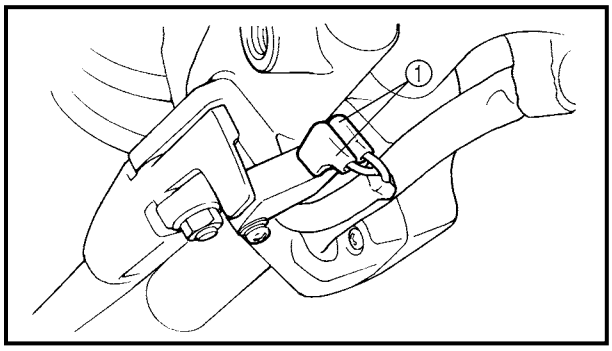

6. Connect:
   - front brake light switch connectors ①

7. Fill:
   - brake master cylinder reservoir
     (with the specified amount of the recommended brake fluid)

	Recommended brake fluid **DOT 4**

⚠ WARNING

- **Use only the designated brake fluid. Other brake fluids may cause the rubber seals to deteriorate, causing leakage and poor brake performance.**
- **Refill with the same type of brake fluid that is already in the system. Mixing brake fluids may result in a harmful chemical reaction, leading to poor brake performance.**
- **When refilling, be careful that water does not enter the brake master cylinder reservoir. Water will significantly lower the boiling point of the brake fluid and could cause vapor lock.**

CAUTION:

Brake fluid may damage painted surfaces and plastic parts. Therefore, always clean up any spilt brake fluid immediately.

8. Bleed:
   - brake system
     Refer to "BLEEDING THE HYDRAULIC BRAKE SYSTEM" in chapter 3.
9. Install:
   - brake master cylinder diaphragm
   - brake master cylinder diaphragm holder
   - brake master cylinder cap
   - rear view mirror

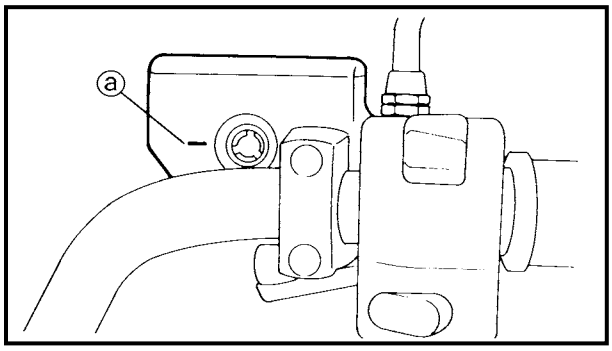

10. Check:
    - brake fluid level
      Below the minimum level mark ⓐ → Add the recommended brake fluid to the proper level.
      Refer to "CHECKING THE BRAKE FLUID LEVEL" in chapter 3.

11. Check:
    - brake lever operation
      Soft or spongy feeling → Bleed the brake system.
      Refer to "BLEEDING THE HYDRAULIC BRAKE SYSTEM" in chapter 3.

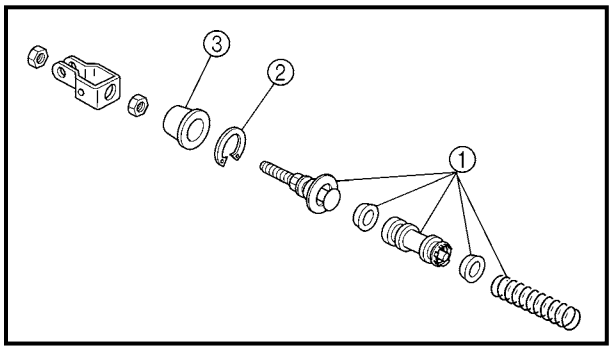

EAS00608

ASSEMBLING AND INSTALLING THE REAR BRAKE MASTER CYLINDER

1. Install:
   - brake master cylinder kit ①
   - circlip ② New
   - dust boot ③

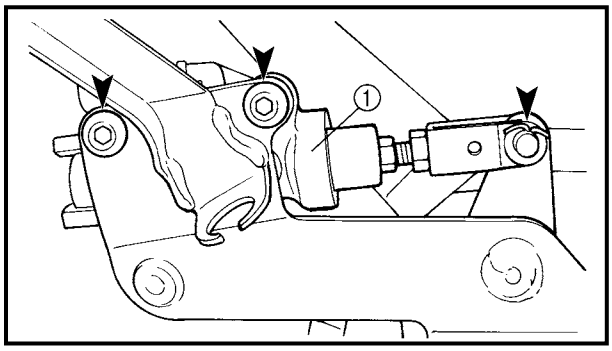

2. Install:
   - brake master cylinder ①

   23 Nm (2.3 m · kg, 17 ft · lb)

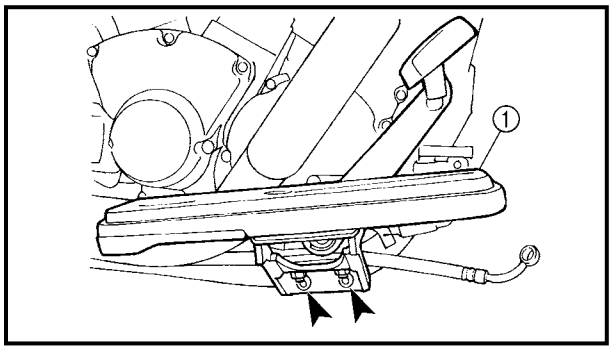

3. Install:
   - left footrest assembly ①

   48 Nm (4.8 m · kg, 35 ft · lb)

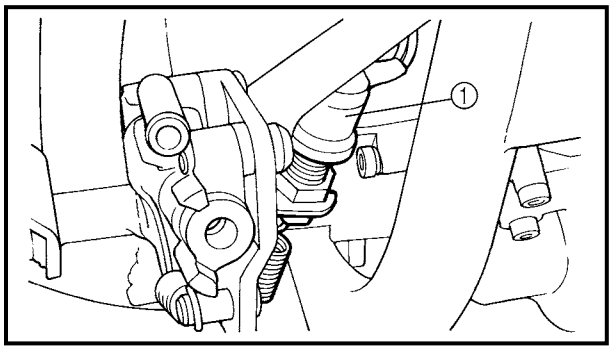

4. Install:
   - rear brake light switch ①

5. Install:
   - copper washers New
   - brake hose
   - union bolt **30 Nm (3.0 m · kg, 22 ft · lb)**

⚠ WARNING

Proper brake hose routing is essential to insure safe motorcycle operation. Refer to "CABLE ROUTING".

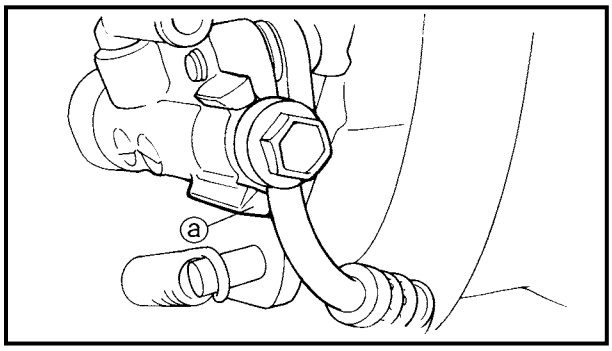

CAUTION:

When installing the brake hose onto the brake master cylinder, make sure the brake pipe touches the projection ⓐ as shown.

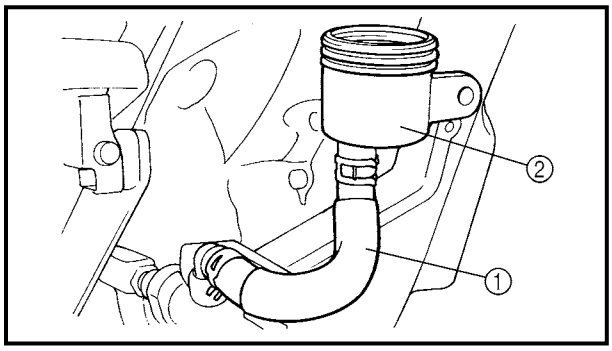

6. Install:
   - brake fluid reservoir hose ①
   - brake fluid reservoir ②

7. Fill:
   - brake fluid reservoir
     (to the maximum level mark)

	Recommended brake fluid DOT 4

⚠ WARNING

- **Use only the designated brake fluid. Other brake fluids may cause the rubber seals to deteriorate, causing leakage and poor brake performance.**
- **Refill with the same type of brake fluid that is already in the system. Mixing brake fluids may result in a harmful chemical reaction, leading to poor brake performance.**
- **When refilling, be careful that water does not enter the brake fluid reservoir. Water will significantly lower the boiling point of the brake fluid and could cause vapor lock.**

CAUTION:

Brake fluid may damage painted surfaces and plastic parts. Therefore, always clean up any spilt brake fluid immediately.

8. Bleed:
   - brake system
     Refer to "BLEEDING THE HYDRAULIC BRAKE SYSTEM" in chapter 3.
9. Install:
   - brake fluid reservoir diaphragm
   - brake fluid reservoir diaphragm holder
   - brake fluid reservoir cap
   - brake fluid reservoir cover

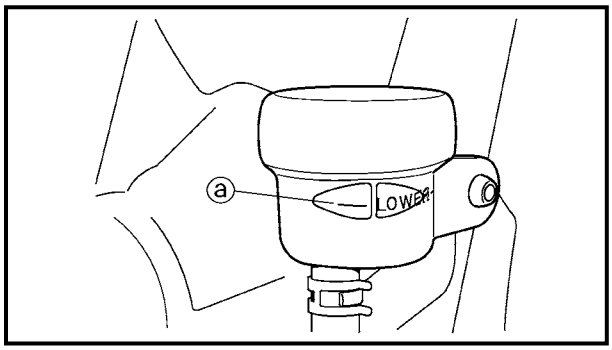

10. Check:
    - brake fluid level
      Below the minimum level mark ⓐ → Add the recommended brake fluid to the proper level.
      Refer to "CHECKING THE BRAKE FLUID LEVEL" in chapter 3.

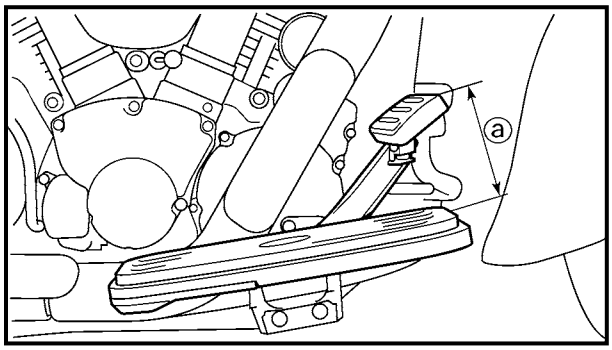

11. Adjust:
    - brake pedal position ⓐ
      Refer to "ADJUSTING THE REAR BRAKE" in chapter 3.

Brake pedal position (below the top of the rider footrest)
100 mm (3.9 in)

12. Adjust:
    - rear brake light operation timing
      Refer to "ADJUSTING THE REAR BRAKE LIGHT SWITCH" in chapter 3.

EAS00613
FRONT BRAKE CALIPERS

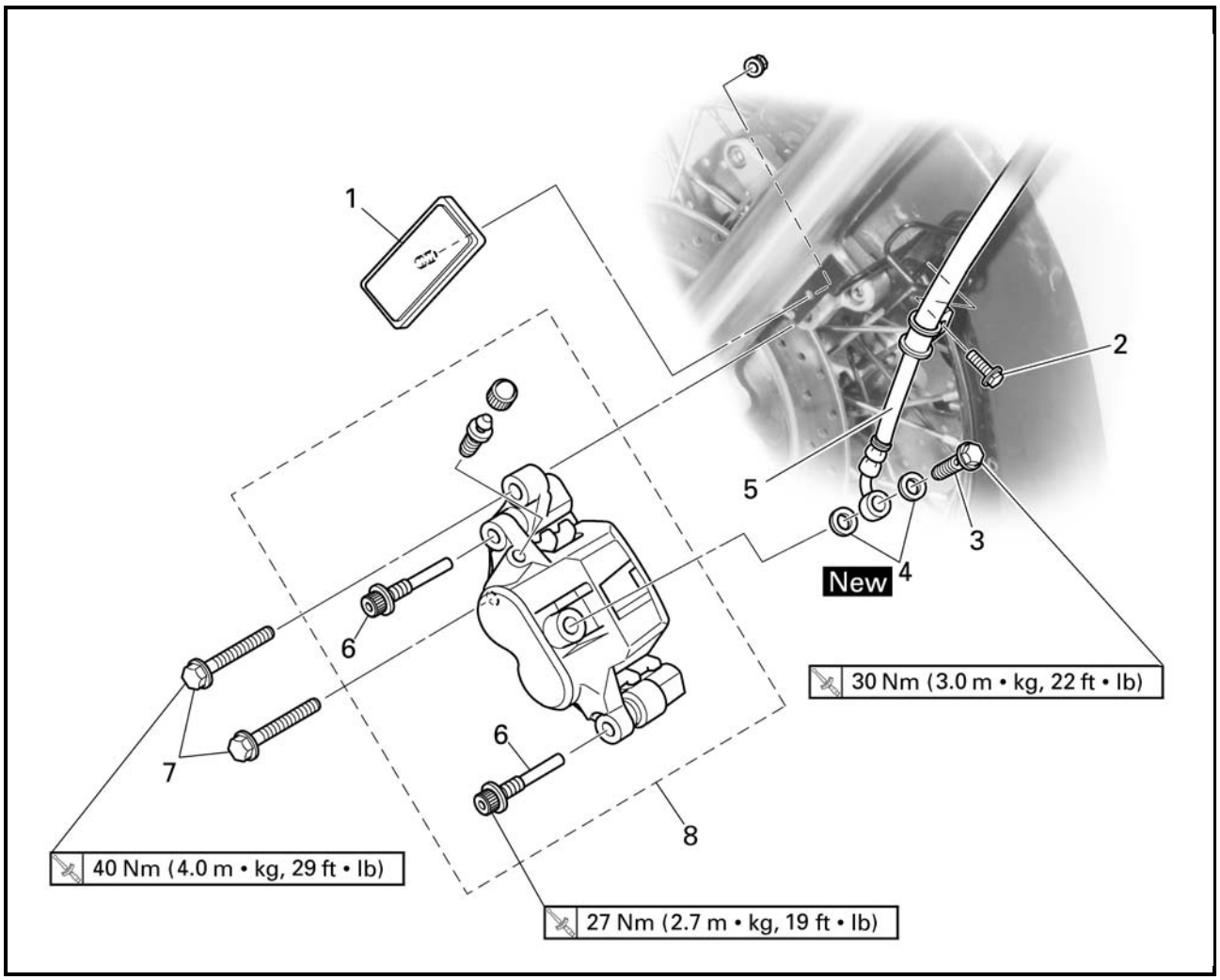

Order	Job/Part	Q'ty	Remarks
	Removing the front brake calipers		Remove the parts in the order listed. The following procedure applies to both of the front brake calipers.
	Brake fluid		Drain.
1	Reflector	1	
2	Brake hose holder bolt	1	
3	Union bolt	1	
4	Copper washer	2	
5	Brake hose	1	
6	Retaining bolt	2	Loosen.
7	Brake caliper bolt	2	
8	Brake caliper	1	
			For installation, reverse the removal procedure.

EAS00615

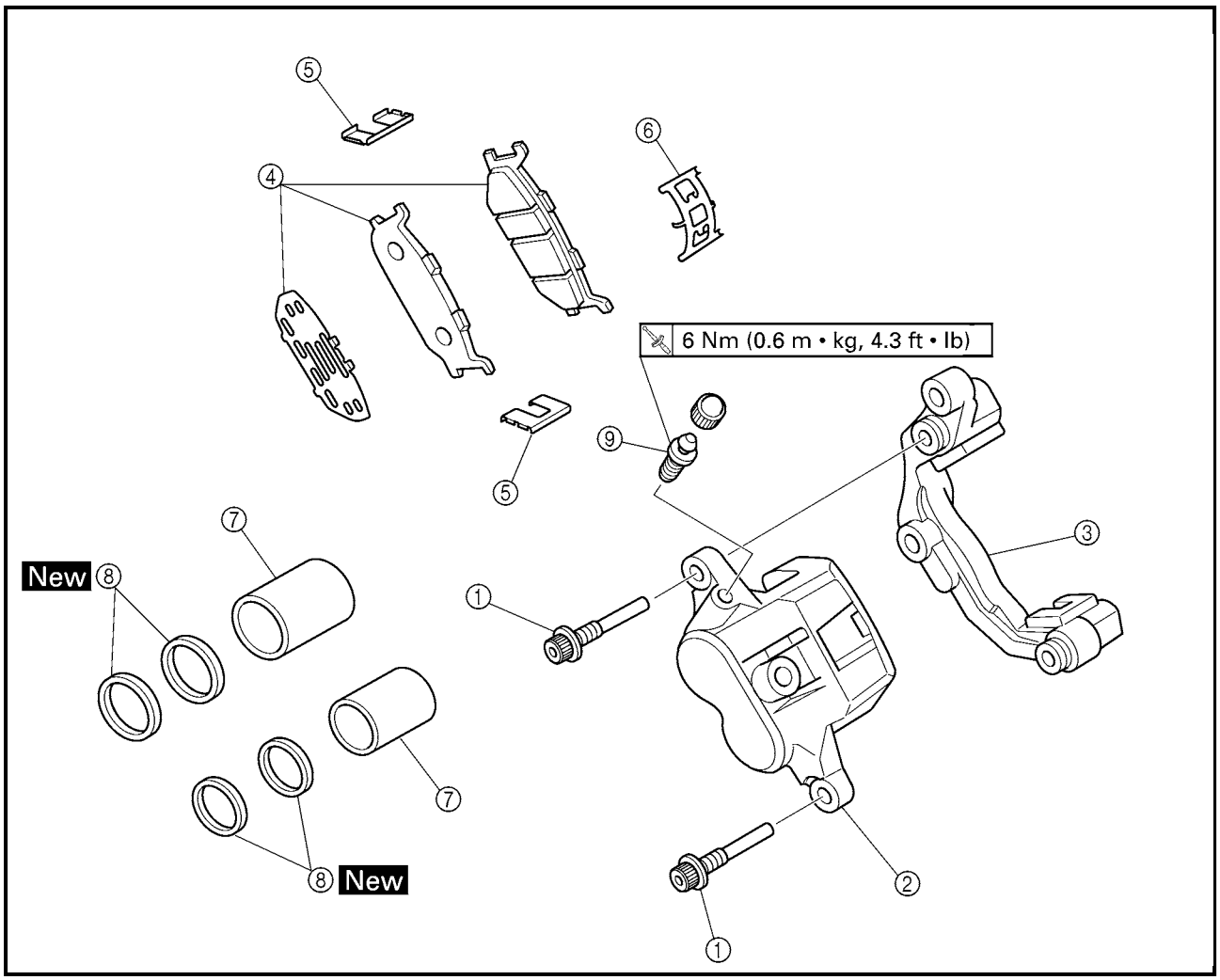

Order	Job/Part	Q'ty	Remarks
	Disassembling the front brake calipers		Remove the parts in the order listed. The following procedure applies to both of the front brake calipers.
①	Retaining bolt	2	
②	Brake caliper	1	
③	Brake caliper bracket	2	
④	Brake pad	2	
⑤	Brake pad spring	2	
⑥	Brake pad spring	1	
⑦	Brake caliper piston	2	
⑧	Brake caliper piston seal	4	
⑨	Bleed screw	1	
			For assembly, reverse the disassembly procedure.

EAS00616
REAR BRAKE CALIPER

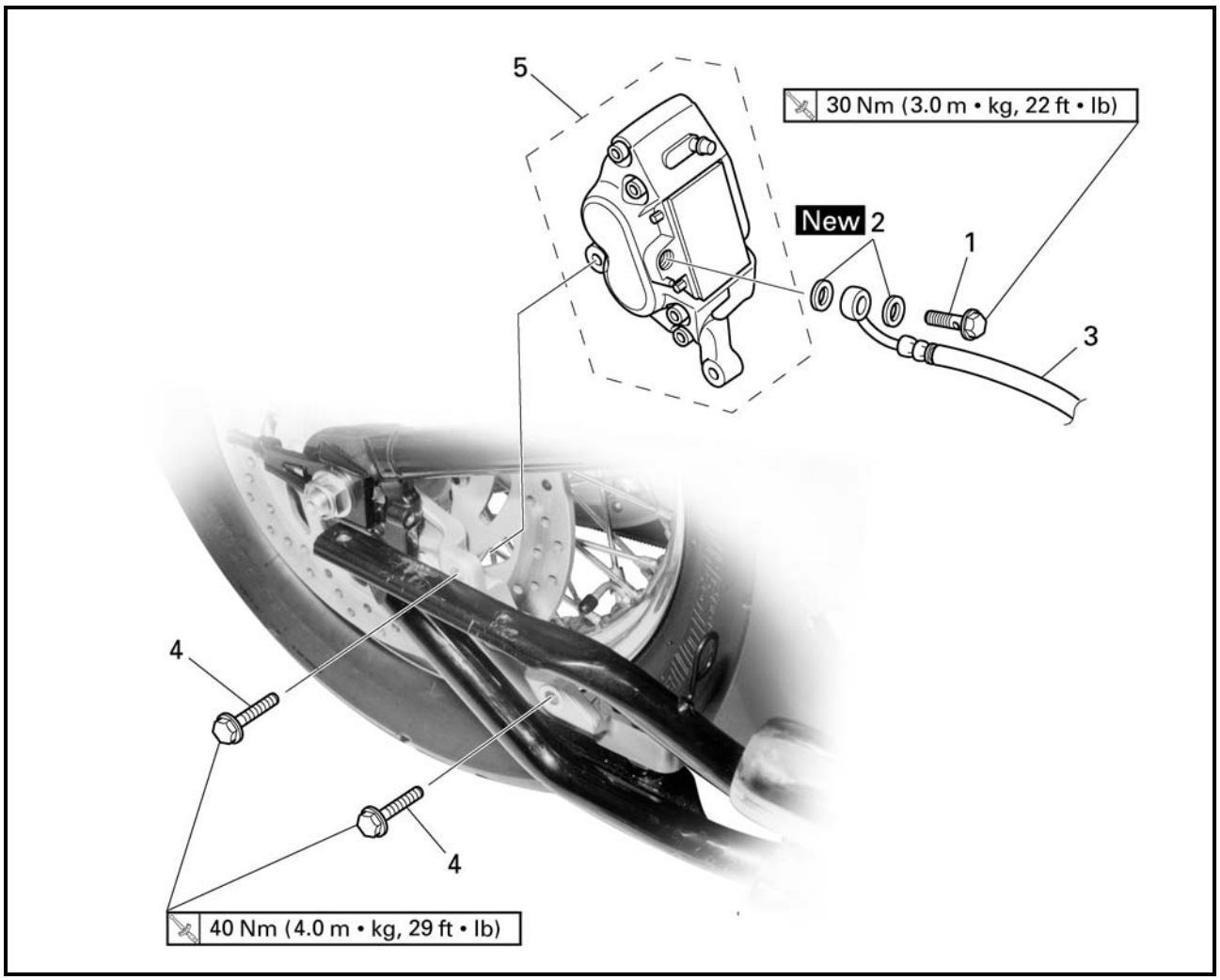

Order	Job/Part	Q'ty	Remarks
	Removing the rear brake caliper		Remove the parts in the order listed.
	Muffler		Refer to "REAR WHEEL, BRAKE DISC AND REAR WHEEL PULLEY".
	Brake fluid		Drain.
1	Union bolt	1	
2	Copper washer	2	
3	Brake hose	1	
4	Brake caliper bolt	2	
5	Brake caliper	1	
			For installation, reverse the removal procedure.

EAS00617

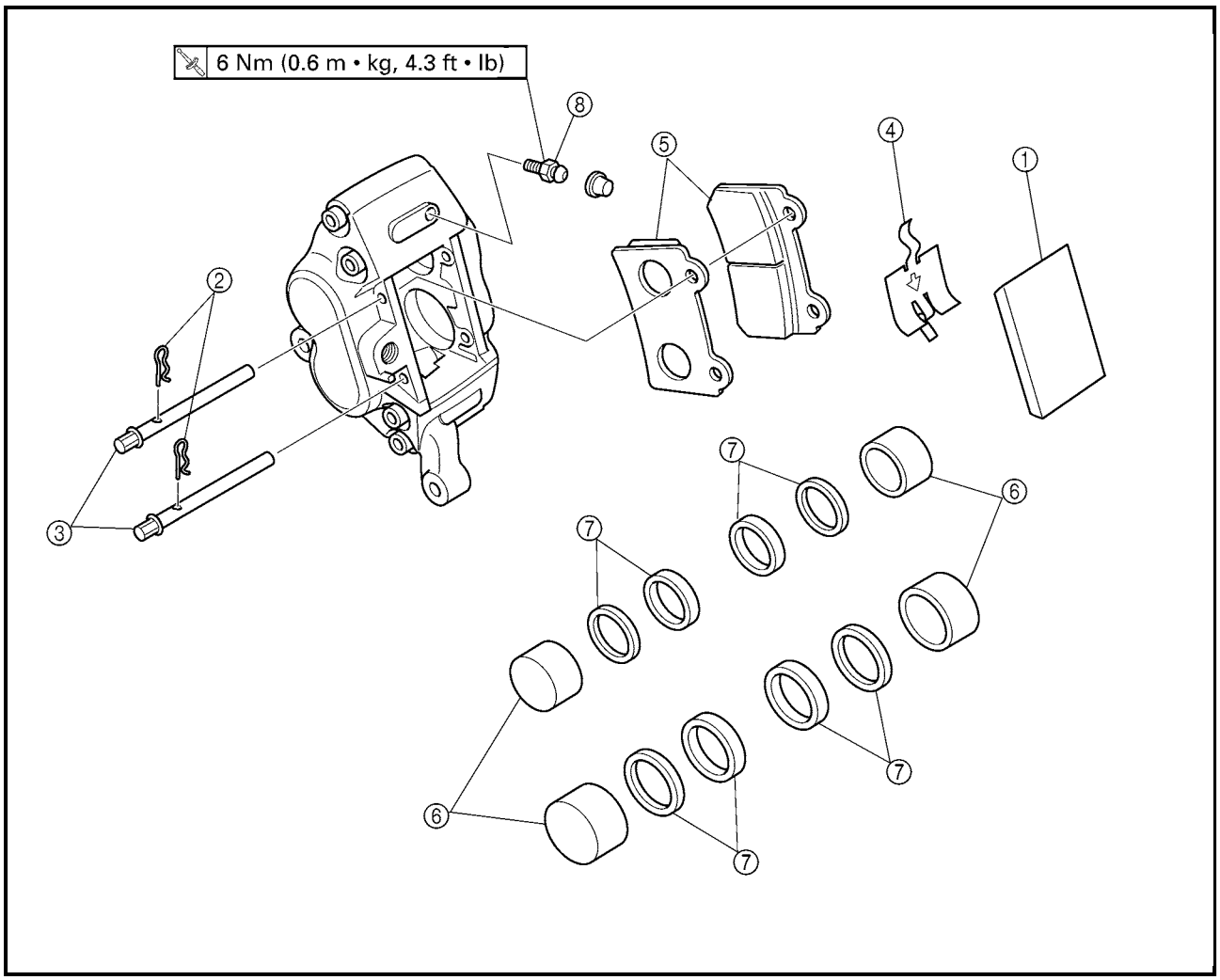

Order	Job/Part	Q'ty	Remarks
	Disassembling the rear brake caliper		Remove the parts in the order listed.
①	Brake pad cover	1	
②	Brake pad clip	2	
③	Brake pad pin	2	
④	Brake pad spring	1	
⑤	Brake pad	2	
⑥	Brake caliper piston	4	
⑦	Brake caliper piston seal	8	
⑧	Bleed screw	1	
			For assembly, reverse the disassembly procedure.

EAS00624
DISASSEMBLING THE FRONT BRAKE CALIPERS

The following procedure applies to both of the brake calipers.

NOTE:
Before disassembling either brake caliper, drain the brake fluid from the entire brake system.

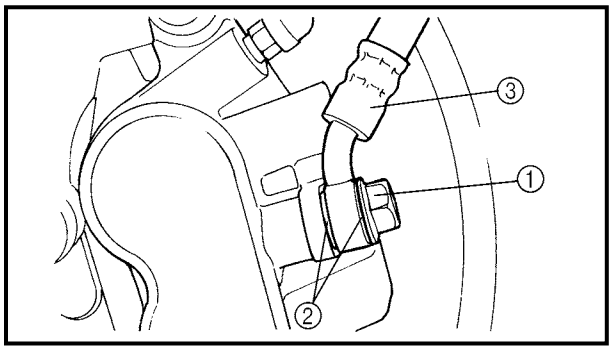

1. Remove:
   - union bolt ①
   - copper washers ②
   - brake hose ③

NOTE:
Put the end of the brake hose into a container and pump out the brake fluid carefully.

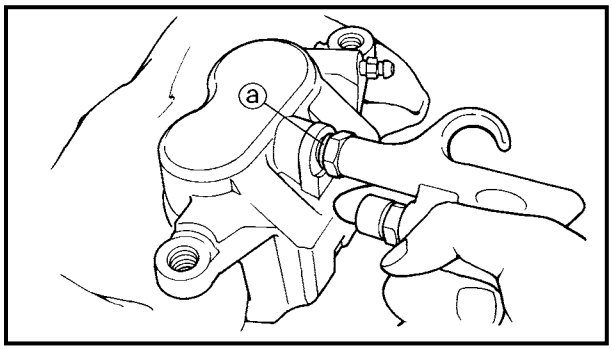

2. Remove:
   - brake caliper pistons
   - brake caliper piston seals

▼▼▼▼▼▼▼▼▼▼▼▼▼▼▼▼▼▼▼▼▼▼▼▼▼▼▼▼▼▼▼▼

a. Blow compressed air into the brake hose joint opening ⓐ to force out the pistons from the brake caliper.

⚠ WARNING

- **Cover the brake caliper pistons with a rag. Be careful not to get injured when the pistons are expelled from the brake caliper.**
- **Never try to pry out the brake caliper pistons.**

b. Remove the brake caliper piston seals.

▲▲▲▲▲▲▲▲▲▲▲▲▲▲▲▲▲▲▲▲▲▲▲▲▲▲▲▲▲▲▲▲

EAS00627
DISASSEMBLING THE REAR BRAKE CALIPER

NOTE:
Before disassembling the brake caliper, drain the brake fluid from the entire brake system.

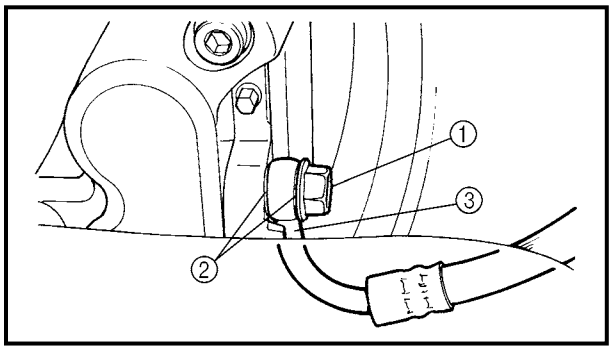

1. Remove:
   - union bolt ①
   - copper washers ②
   - brake hose ③

NOTE:
Put the end of the brake hose into a container and pump out the brake fluid carefully.

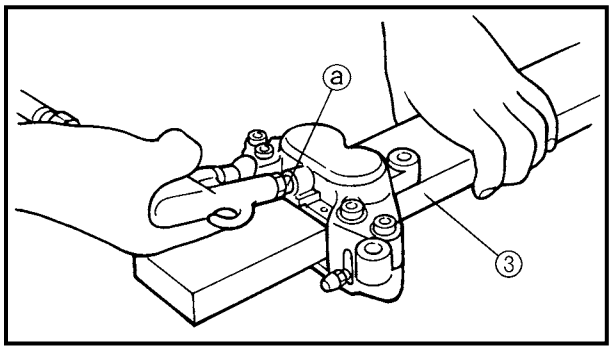

2. Remove:
   - brake caliper pistons ①
   - brake caliper piston seals ②

▼▼▼▼▼▼▼▼▼▼▼▼▼▼▼▼▼▼▼▼▼▼▼▼▼▼▼▼▼▼▼▼

a. Secure the right side brake caliper piston with a peace of wood ③.

b. Blow compressed air into the brake hose joint opening ⓐ to force out the left side pistons from the brake caliper.

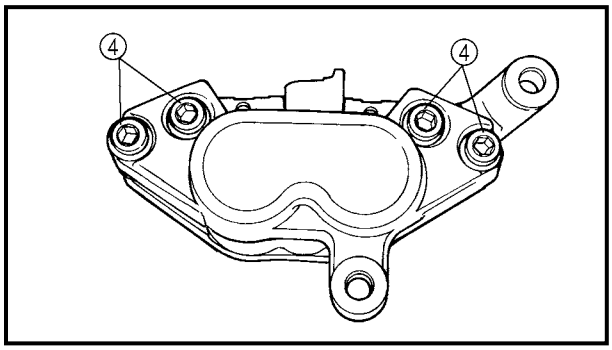

⚠ WARNING

- **Never try to pry out the brake caliper pistons.**
- **Do not loosen the bolts ④.**

c. Remove the brake caliper piston seals.

d. Repeat the previous steps to force out the right side piston from the brake caliper.

▲▲▲▲▲▲▲▲▲▲▲▲▲▲▲▲▲▲▲▲▲▲▲▲▲▲▲▲▲▲▲▲

EAS00633

CHECKING THE FRONT AND REAR BRAKE CALIPERS

Recommended brake component replacement schedule	
Brake pads	**If necessary**
Piston seals	**Every two years**
Brake hoses	**Every two years**
Brake fluid	**Every two years and whenever the brake is disassembled**

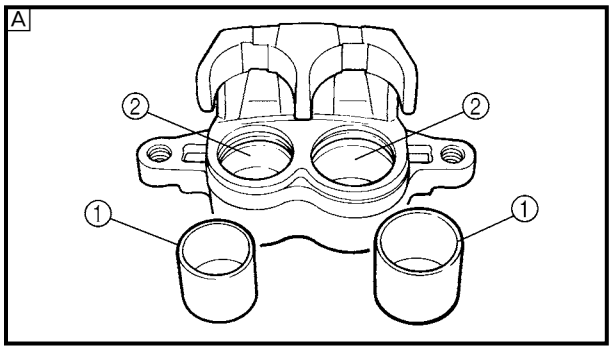

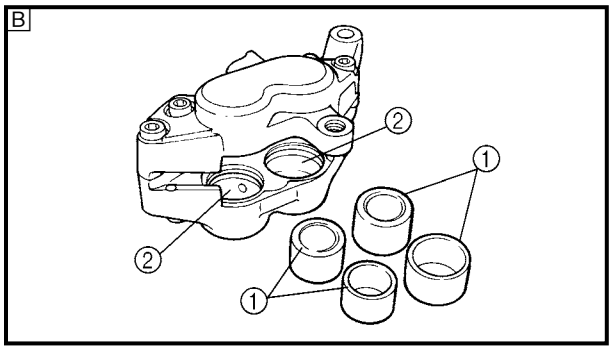

1. Check:
   - brake caliper pistons ①
     Rust/scratches/wear → Replace the brake caliper.
   - brake caliper cylinders ②
     Scratches/wear → Replace the brake caliper.
   - brake calipers
     Cracks/damage → Replace.
   - brake fluid delivery passages (brake caliper body)
     Obstruction → Blow out with compressed air.

⚠ WARNING

Whenever a brake caliper is disassembled, replace the brake caliper piston seals.

A Front
B Rear

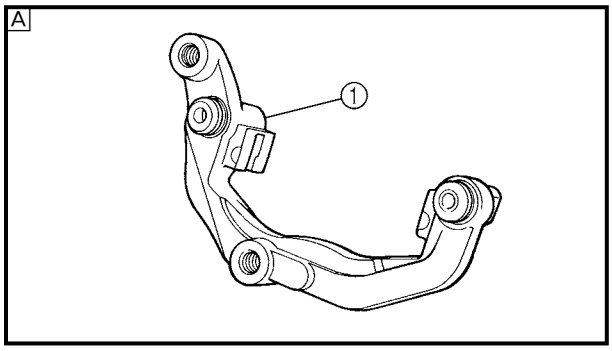

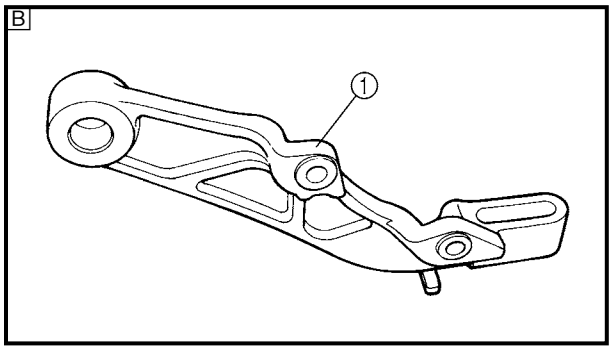

2. Check:
   - brake caliper brackets ①
     Cracks/damage → Replace.

A Front
B Rear

EAS00638

ASSEMBLING AND INSTALLING THE FRONT BRAKE CALIPERS

The following procedure applies to both of the brake calipers.

⚠ WARNING

- **Before installation, all internal brake components should be cleaned and lubricated with clean or new brake fluid.**

- **Never use solvents on internal brake components as they will cause the piston seals to swell and distort.**
- **Whenever a brake caliper is disassembled, replace the brake caliper piston seals.**

Recommended brake fluid
DOT 4

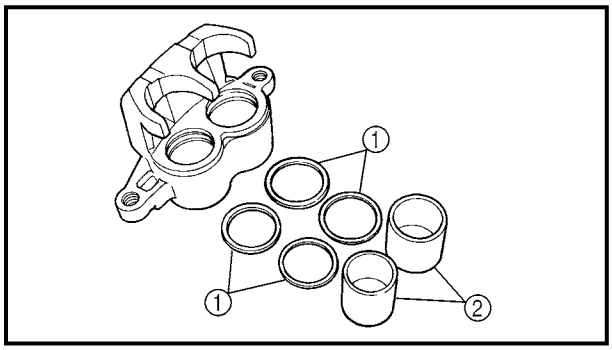

1. Install:
   - bleed screw
   - brake caliper piston seals ① New
   - brake caliper pistons ②

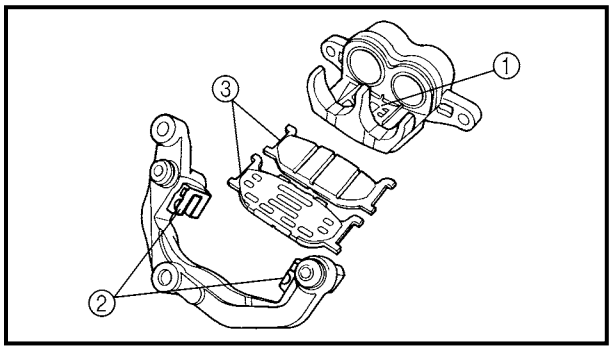

2. Install:
   - brake pad spring ①
   - brake pad springs ②
   - brake pads ③

NOTE:
Install the brake pad with the attached brake pad shim on the brake caliper piston side.

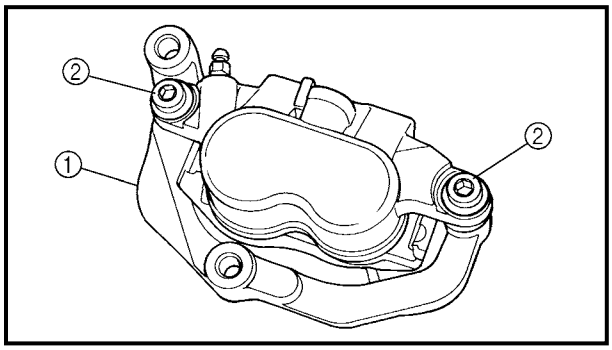

3. Install:
   - brake caliper bracket ①
   - retaining bolts ②

NOTE:
Temporarily tighten the retaining bolts.

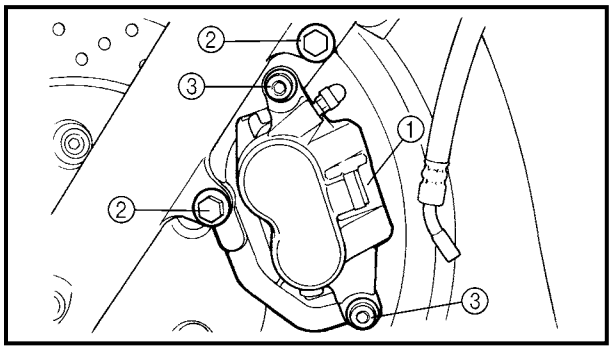

4. Install:
   - brake caliper ①
   - brake caliper bolts ②

40 Nm (4.0 m · kg, 29 ft · lb)

5. Tighten:
   - retaining bolts ③

27 Nm (2.7 m · kg, 19 ft · lb)

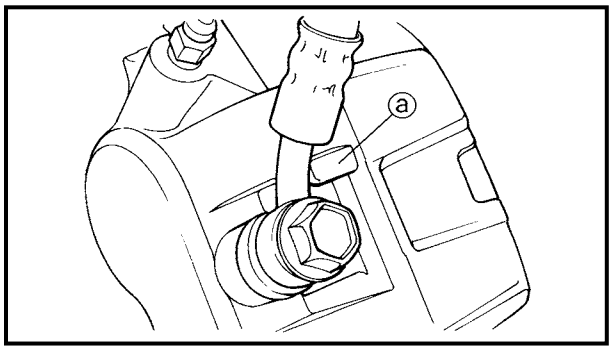

6. Install:
   - copper washers New
   - brake hose
   - union bolt 30 Nm (3.0 m · kg, 22 ft · lb)

WARNING

Proper brake hose routing is essential to insure safe motorcycle operation. Refer to "CABLE ROUTING".

CAUTION:

When installing the brake hose onto the brake caliper, make sure the brake pipe touches the projection ⓐ on the brake caliper.

7. Fill:
   - brake master cylinder reservoir
     (with the specified amount of the recommended brake fluid)

Recommended brake fluid
DOT 4

WARNING

- **Use only the designated brake fluid. Other brake fluids may cause the rubber seals to deteriorate, causing leakage and poor brake performance.**
- **Refill with the same type of brake fluid that is already in the system. Mixing brake fluids may result in a harmful chemical reaction, leading to poor brake performance.**
- **When refilling, be careful that water does not enter the brake master cylinder reservoir. Water will significantly lower the boiling point of the brake fluid and could cause vapor lock.**

CAUTION:

Brake fluid may damage painted surfaces and plastic parts. Therefore, always clean up any spilt brake fluid immediately.

8. Bleed:
   - brake system
     Refer to "BLEEDING THE HYDRAULIC BRAKE SYSTEM" in chapter 3.

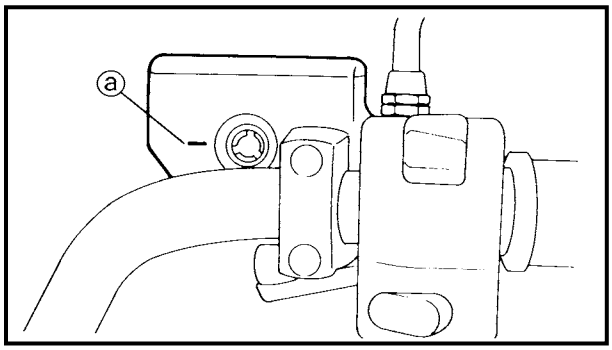

9. Check:
   - brake fluid level
     Below the minimum level mark ⓐ → Add the recommended brake fluid to the proper level.
     Refer to "CHECKING THE BRAKE FLUID LEVEL" in chapter 3.

10. Check:
    - brake lever operation
      Soft or spongy feeling → Bleed the brake system.
      Refer to "BLEEDING THE HYDRAULIC BRAKE SYSTEM" in chapter 3.

EAS00642

ASSEMBLING AND INSTALLING THE REAR BRAKE CALIPER

⚠ WARNING

- **Before installation, all internal brake components should be cleaned and lubricated with clean or new brake fluid.**
- **Never use solvents on internal brake components as they will cause the piston seals to swell and distort.**
- **Whenever a brake caliper is disassembled, replace the brake caliper piston seals.**

	Recommended brake fluid **DOT 4**

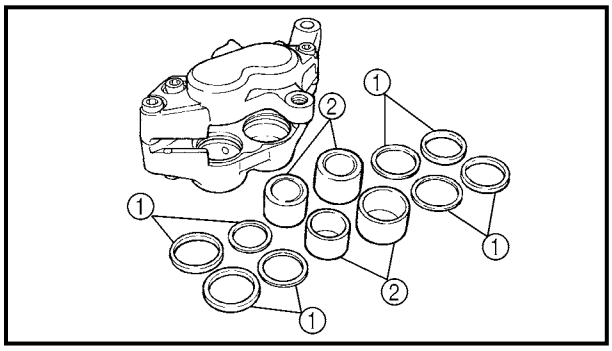

1. Install:
   - bleed screw
   - brake caliper piston seals ① New
   - brake caliper pistons ②

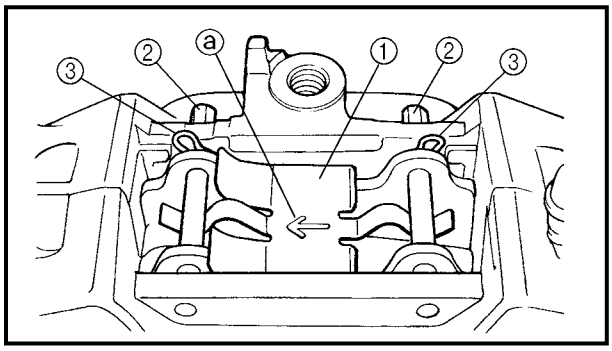

2. Install:
   - brake pads
   - brake pad spring ①
   - brake pad pins ②
   - brake pad clips ③

NOTE:
The arrow ⓐ on the brake pad spring must point in the direction of disc rotation.

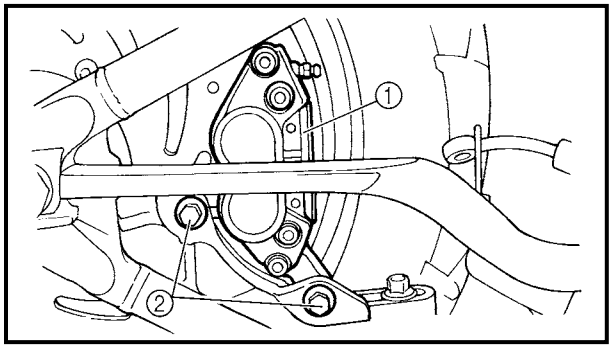

3. Install:
   - brake pad cover
4. Install:
   - brake caliper ①
   - brake caliper bolts ②

40 Nm (4.0 m · kg, 29 ft · lb)

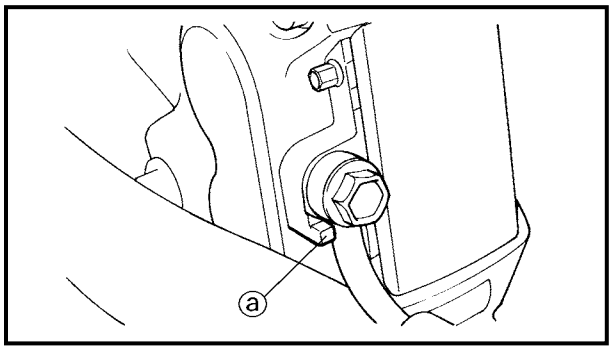

5. Install:
   - copper washers New
   - brake hose
   - union bolt **30 Nm (3.0 m · kg, 22 ft · lb)**

⚠ WARNING

Proper brake hose routing is essential to insure safe motorcycle operation. Refer to "CABLE ROUTING".

CAUTION:

When installing the brake hose onto the brake caliper, make sure the brake pipe touches the projection ⓐ on the brake caliper.

6. Fill:
   - brake fluid reservoir
     (with the specified amount of the recommended brake fluid)

	Recommended brake fluid **DOT 4**

⚠ WARNING

- **Use only the designated brake fluid. Other brake fluids may cause the rubber seals to deteriorate, causing leakage and poor brake performance.**
- **Refill with the same type of brake fluid that is already in the system. Mixing brake fluids may result in a harmful chemical reaction, leading to poor brake performance.**
- **When refilling, be careful that water does not enter the brake fluid reservoir. Water will significantly lower the boiling point of the brake fluid and could cause vapor lock.**

CAUTION:

Brake fluid may damage painted surfaces and plastic parts. Therefore, always clean up any spilt brake fluid immediately.

7. Bleed:
   - brake system
     Refer to "BLEEDING THE HYDRAULIC BRAKE SYSTEM" in chapter 3.
8. Check:
   - brake fluid level
     Below the minimum level mark ⓐ → Add the recommended brake fluid to the proper level.
     Refer to "CHECKING THE BRAKE FLUID LEVEL" in chapter 3.

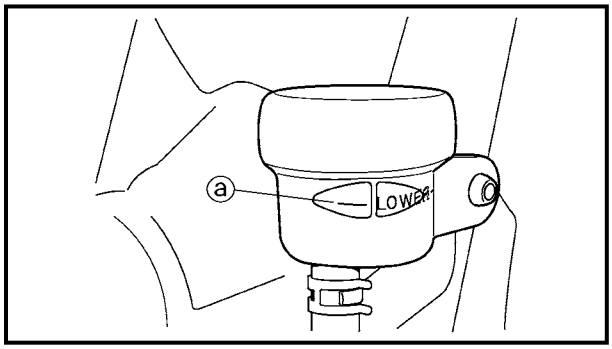

9. Check:
   - brake pedal operation
     Soft or spongy feeling → Bleed the brake system.
     Refer to "BLEEDING THE HYDRAULIC BRAKE SYSTEM" in chapter 3.

EAS00647
FRONT FORK

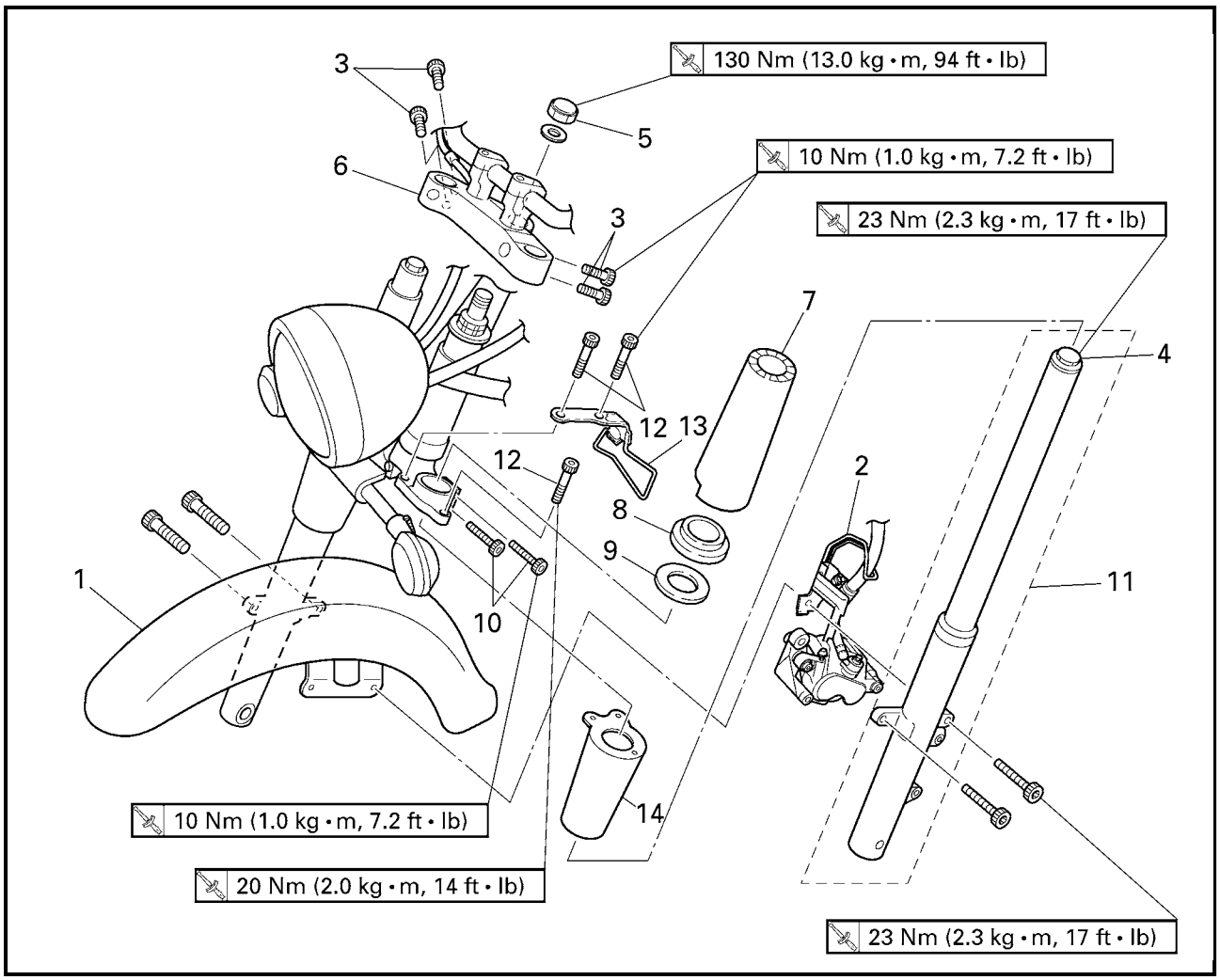

Order	Job/Part	Q'ty	Remarks
	Removing the front fork legs		Remove the parts in the order listed. The following procedure applies to both of the front fork legs.
	Front wheel		Refer to "FRONT WHEEL AND BRAKE DISCS".
	Meter assembly		Refer to "FUEL TANK" in chapter 3.
1	Front fender	1	
2	Brake hose holder	1	
3	Upper bracket pinch bolt	4	Loosen.
4	Cap bolt	1	
5	Steering stem nut	1	
6	Upper bracket	1	
7	Upper fork cover	1	
8	Upper fork cover spacer	1	
9	Upper fork cover washer	1	

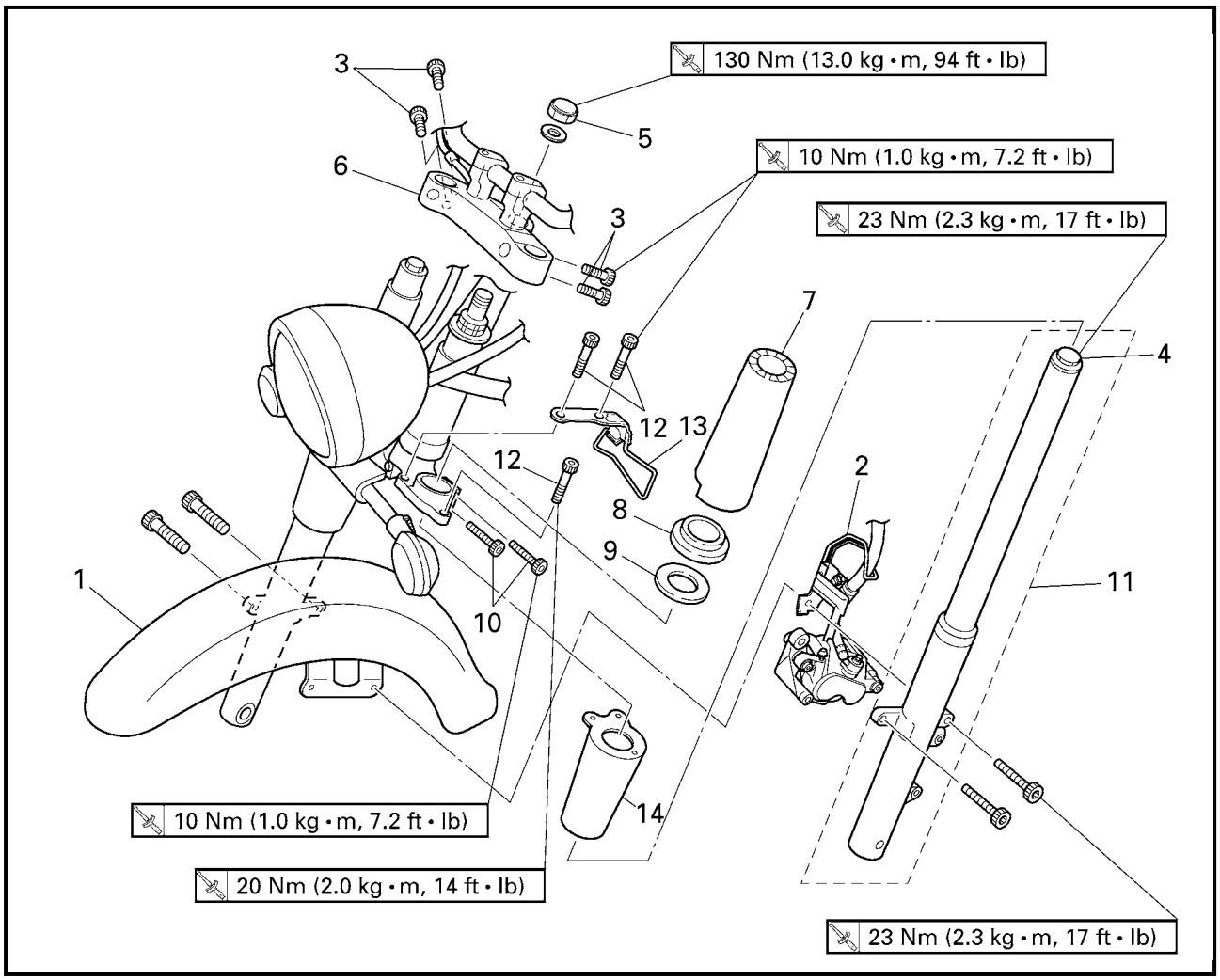

Order	Job/Part	Q'ty	Remarks
10	Lower bracket pinch bolt	2	Loosen.
11	Front fork leg	1	
12	Bolt	3	
13	Brake hose guide	1	
14	Lower fork cover	1	
			For installation, reverse the removal procedure.

EAS00648

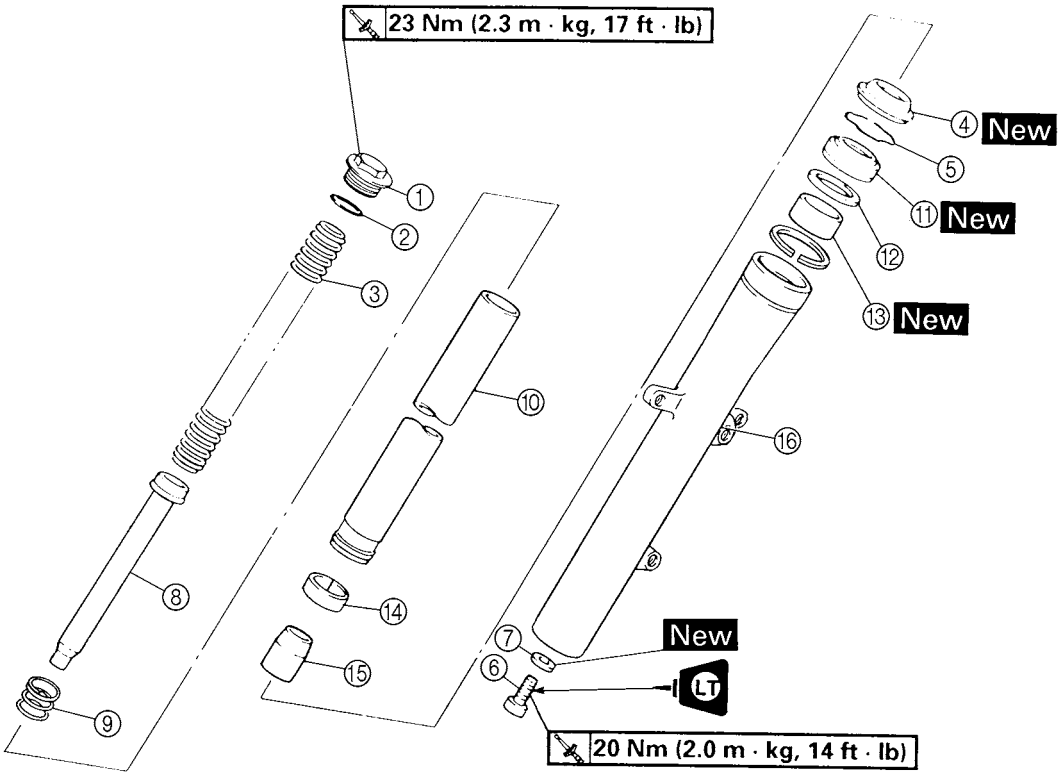

Order	Job/Part	Q'ty	Remarks
	Disassembling the front fork leg		Remove the parts in the order listed. The following procedure applies to both of the front fork legs.
①	Cap bolt	1	
②	O-ring	1	
③	Fork spring	1	
④	Dust seal	1	
⑤	Oil seal clip	1	
⑥	Cartridge cylinder bolt	1	
⑦	Copper washer	1	
⑧	Cartridge cylinder	1	
⑨	Rebound spring	1	
⑩	Inner tube	1	

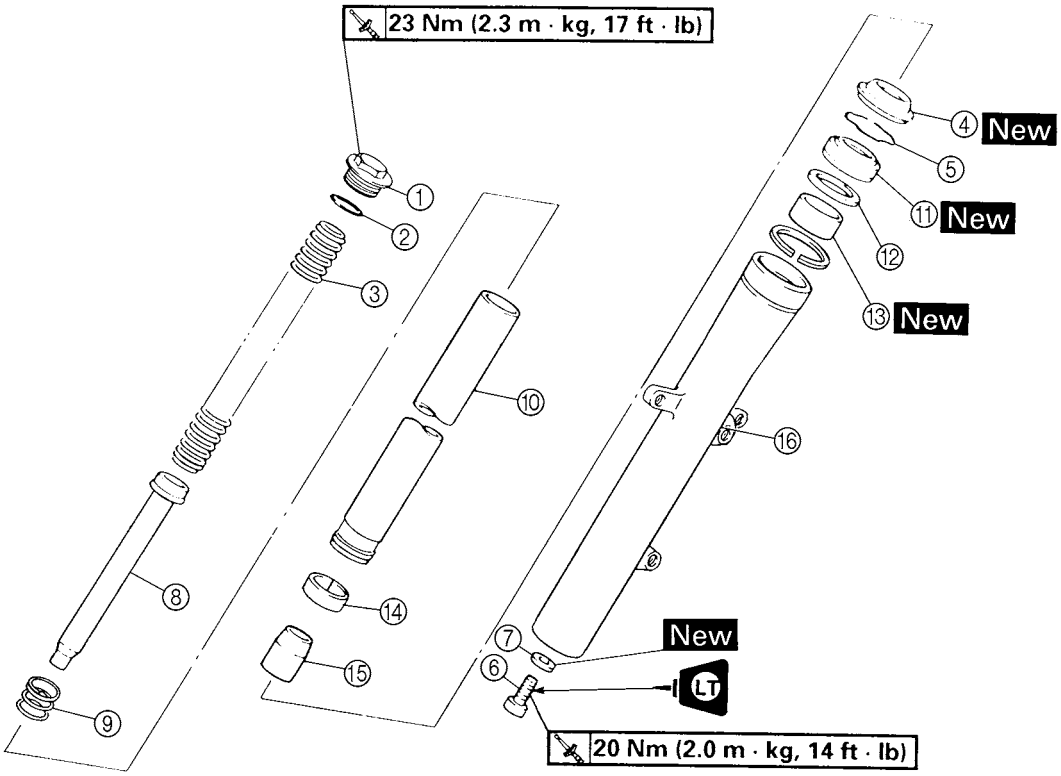

Order	Job/Part	Q'ty	Remarks
⑪	Oil seal	1	
⑫	Seal spacer	1	
⑬	Outer tube bushing	1	
⑭	Inner tube bushing	1	
⑮	Oil flow stopper	1	
⑯	Outer tube	1	
			For assembly, reverse the disassembly procedure.

EAS00649
REMOVING THE FRONT FORK LEGS

The following procedure applies to both of the front fork legs.

1. Stand the motorcycle on a level surface.

WARNING

Securely support the motorcycle so that there is no danger of it falling over.

NOTE:

Place the motorcycle on a suitable stand so that the front wheel is elevated.

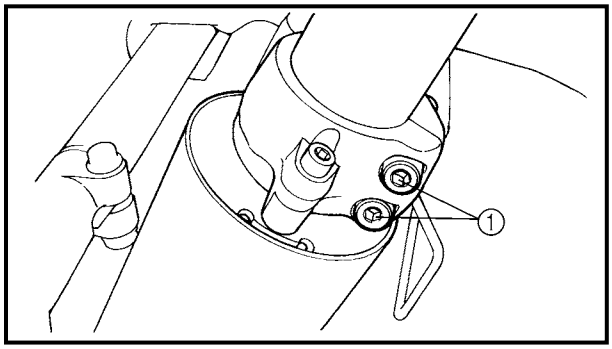

2. Loosen:
   - lower bracket pinch bolts ①

WARNING

Before loosening the lower bracket pinch bolts, support the front fork leg.

3. Remove:
   - front fork leg

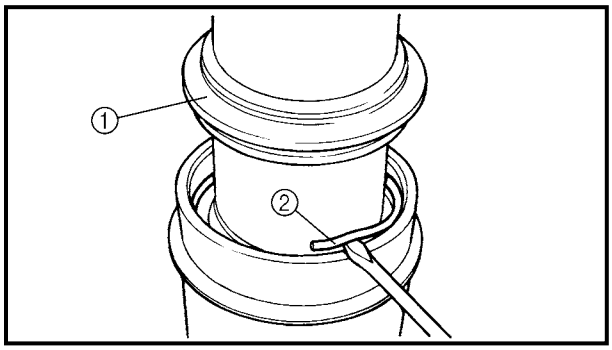

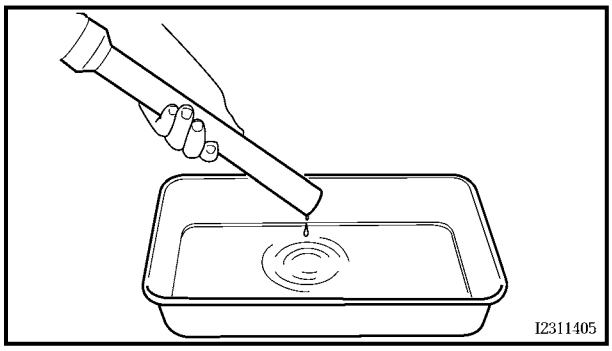

EAS00652
DISASSEMBLING THE FRONT FORK LEGS

The following procedure applies to both of the front fork legs.

1. Remove:
   - dust seal ①
   - oil seal clip ②
     (with a flat-head screwdriver)

CAUTION:

Do not scratch the inner tube.

2. Drain:
   - fork oil

NOTE:

Stroke the outer tube several times while draining the fork oil.

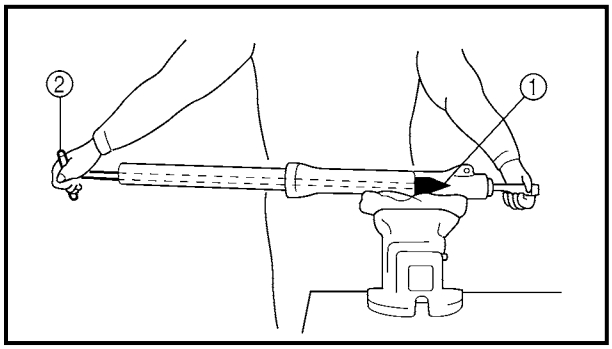

3. Remove:
   - cartridge cylinder bolt

NOTE:
While holding the cartridge cylinder with the damper rod holder ① and T-handle ②, loosen the cartridge cylinder bolt.

Damper rod holder
YM-1300-1
T-Handle
YM-01326

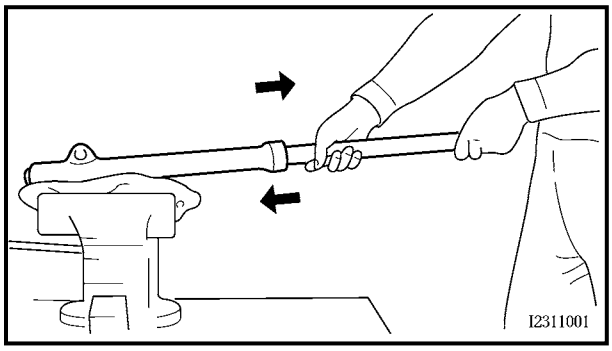

4. Remove:
   - inner tube

▼▼▼▼▼▼▼▼▼▼▼▼▼▼▼▼▼▼▼▼▼▼▼▼▼▼▼▼▼▼

a. Hold the front fork leg horizontally.
b. Securely clamp the brake caliper bracket in a vise with soft jaws.
c. Separate the inner tube from the outer tube by pulling the inner tube forcefully but carefully.

CAUTION:
- **Excessive force will damage the oil seal and bushing. A damaged oil seal or bushing must be replaced.**
- **Avoid bottoming the inner tube into the outer tube during the above procedure, as the oil flow stopper will be damaged.**

▲▲▲▲▲▲▲▲▲▲▲▲▲▲▲▲▲▲▲▲▲▲▲▲▲▲▲▲▲▲

EAS00656
CHECKING THE FRONT FORK LEGS

The following procedure applies to both of the front fork legs.

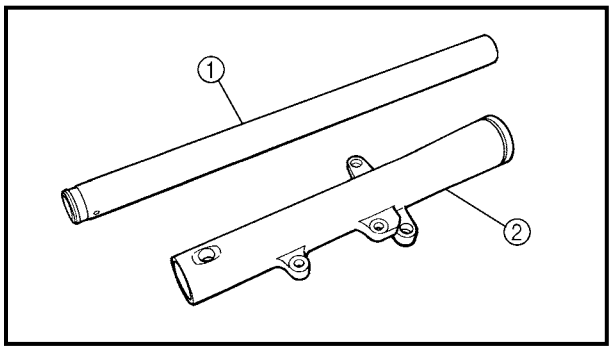

1. Check:
   - inner tube ①
   - outer tube ②
     Bends/damage/scratches → Replace.

⚠ WARNING

Do not attempt to straighten a bent inner tube as this may dangerously weaken it.

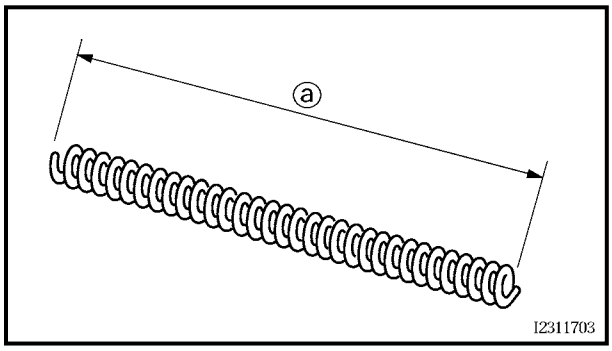

2. Measure:
   - spring free length ⓐ
     Out of specification → Replace.

Spring free length limit
566 mm (22.3 in)

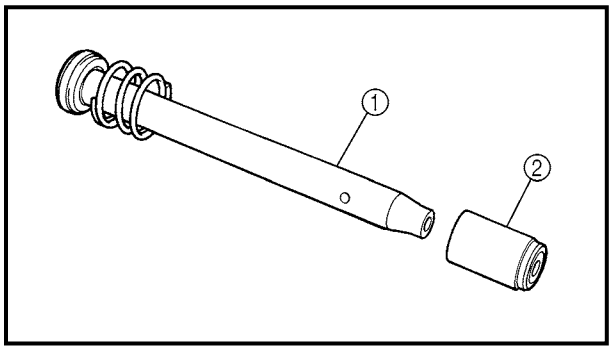

3. Check:
   - cartridge cylinder ①
     Damage/wear → Replace.
     Obstruction → Blow out all of the oil passages with compressed air.
   - oil flow stopper ②
     Damage → Replace.

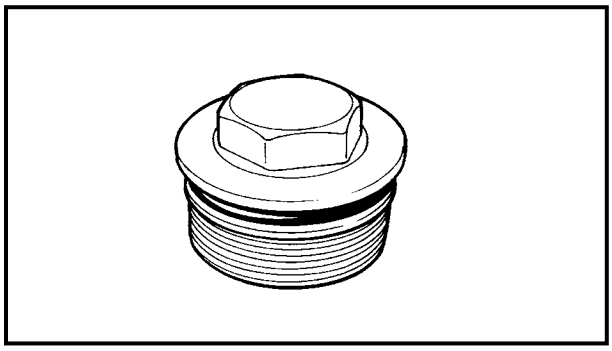

4. Check:
   - cap bolt O-ring
     Damage/wear → Replace.

EAS00658
ASSEMBLING THE FRONT FORK LEGS

The following procedure applies to both of the front fork legs.

⚠ WARNING

- **Make sure the oil levels in both front fork legs are equal.**
- **Uneven oil levels can result in poor handling and a loss of stability.**

NOTE:

- When assembling the front fork leg, be sure to replace the following parts:
  - inner tube bushing
  - outer tube bushing
  - oil seal
  - dust seal
- Before assembling the front fork leg, make sure all of the components are clean.

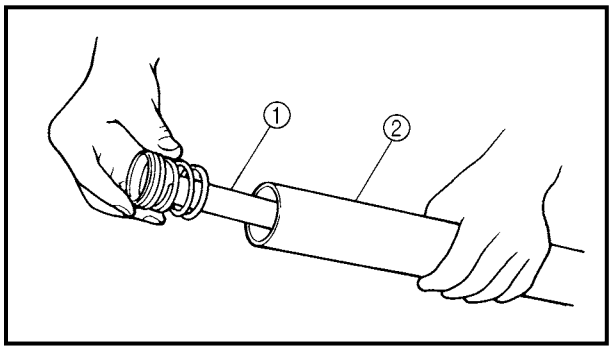

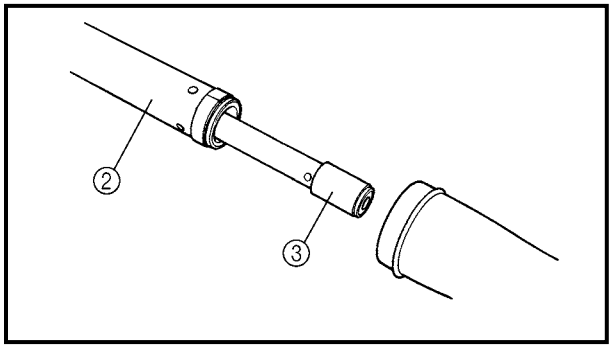

1. Install:
   - cartridge cylinder ①

CAUTION:

Allow the cartridge cylinder to slide slowly down the inner tube ② until it protrudes from the bottom of the inner tube. Be careful not to damage the inner tube.

2. Install:
   - oil flow stopper ③
3. Lubricate:
   - inner tube's outer surface

Recommended lubricant
Yamaha fork and shock oil 5WT or equivalent

4. Install:
   - outer tube
     (onto the inner tube)
   - copper washer New
   - cartridge cylinder bolt

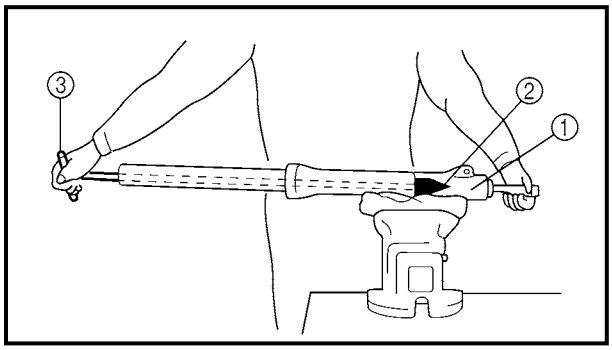

5. Tighten:
   - cartridge cylinder bolt ①

20 Nm (2.0 m · kg, 14 ft · lb)

NOTE:
- Apply the locking agent (LOCTITE® 204) to the threads of the cartridge cylinder bolt.
- While holding the cartridge cylinder with the damper rod holder ② and T-handle ③, tighten the cartridge cylinder bolt.

Damper rod holder
YM-1300-1
T-handle
YM-01326

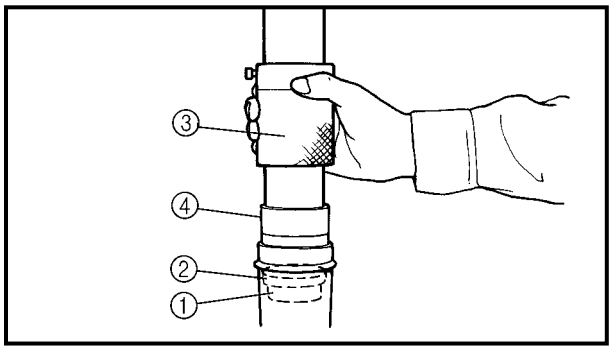

6. Install:
   - outer tube bushing ① New
   - seal spacer ②
     (with the fork seal driver weight ③ and adapter ④)

	Fork seal driver weight **YM-33963** **Adapter** **YM-8020**

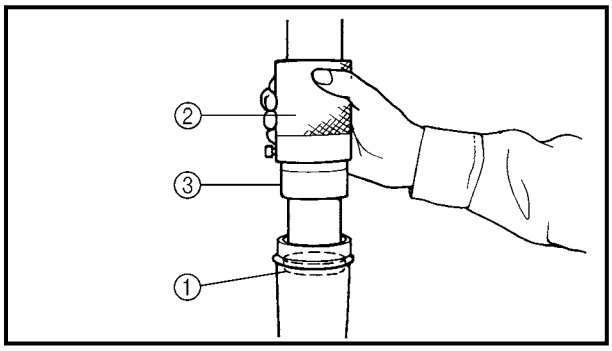

7. Install:
   - oil seal ① New
     (with the fork seal driver weight ② and adapter ③)

CAUTION:

Make sure the numbered side of the oil seal faces up.

NOTE:
- Before installing the oil seal, lubricate its lips with lithium soap base grease.
- Lubricate the outer surface of the inner tube with fork oil.
- Before installing the oil seal, cover the top of the front fork leg with a plastic bag ④ to protect the oil seal during installation.

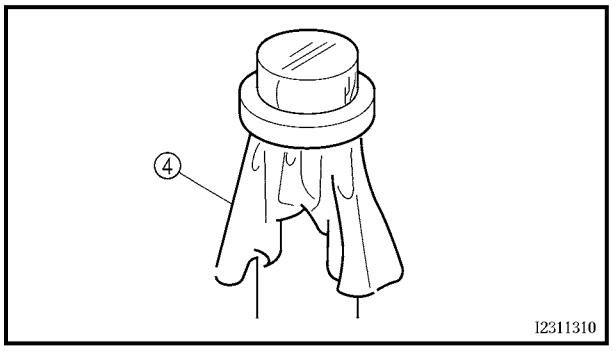

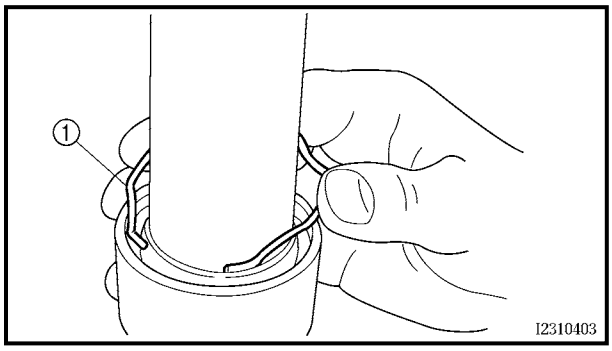

8. Install:
   - oil seal clip ①

NOTE:
Adjust the oil seal clip so that it fits into the outer tube's groove.

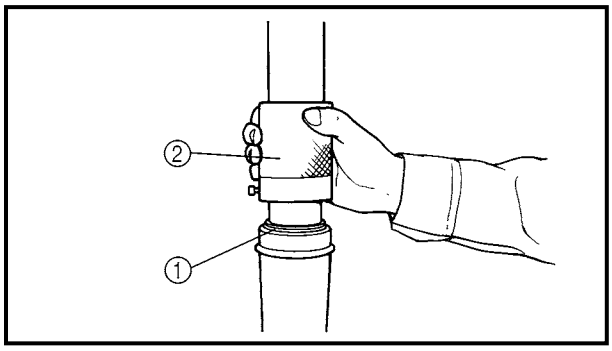

9. Install:
   - dust seal ① New
     (with the fork seal driver weight ②)

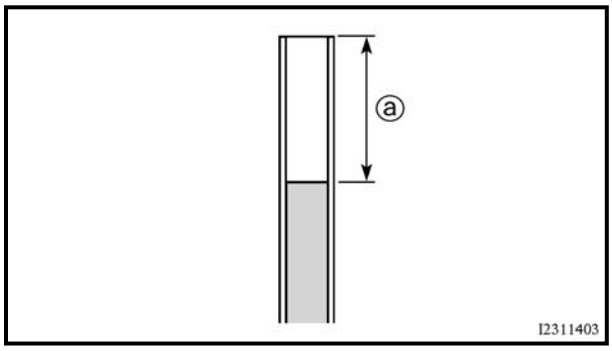

10.Fill:
- front fork leg
  (with the specified amount of the recommended fork oil)

Quantity (each front fork leg)
554 L (488 lmp qt, 589 US qt)
Front fork leg oil level ⓐ
(from the top of the inner tube, with the inner tube fully compressed, and without the fork spring)
110 mm (4.33 in)
Recommended oil
Yamaha fork and shock oil 5WT or equivalent

NOTE:
- While filling the front fork leg, keep it upright.
- After filling, slowly pump the front fork leg up and down to distribute the fork oil.

11.Install:
- fork spring
- cap bolt

NOTE:
- Before installing the cap bolt, lubricate its O-ring with grease.
- Temporarily tighten the cap bolt.

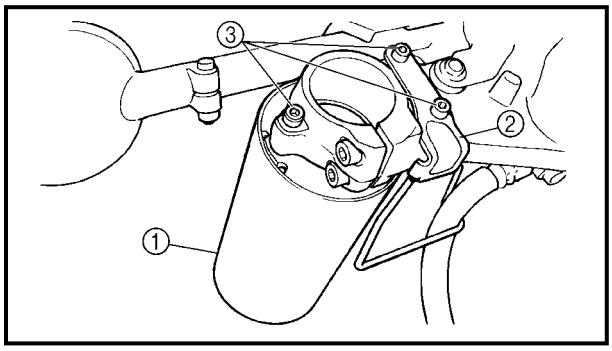

EAS00662
INSTALLING THE FRONT FORK LEGS

The following procedure applies to both of the front fork legs.

1. Install:
   - lower fork cover ①
   - brake hose guide ②
   - bolts ③ **10 Nm (1.0 m · kg, 7.2 ft · lb)**

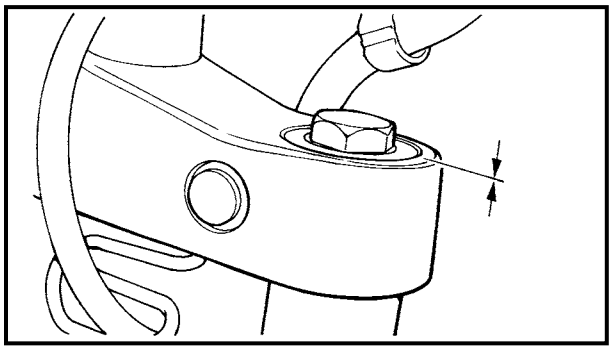

2. Install:
   - front fork leg

NOTE:
- When aligning the fork tube do not install the upper fork cover.
- Temporarily tighten the lower bracket pinch bolts.

3. Install:
   - Upper bracket
   - Steering stem nut

   130 Nm (13.0 m · kg, 94 ft · lb)

NOTE:
Make sure the inner fork tube is flush with the top of the upper bracket.

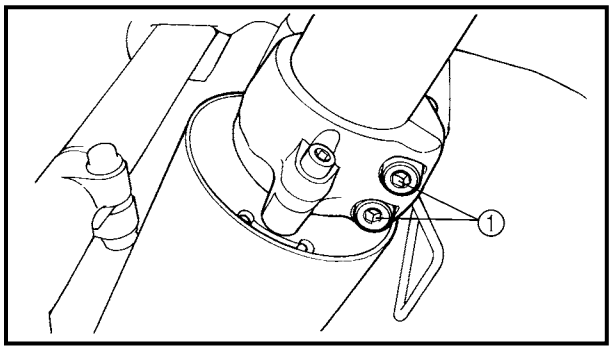

4. Tighten:
   - lower bracket pinch bolt ①

     20 Nm (2.0 m · kg, 14 ft · lb)
   - cap bolt **23 Nm (2.3 m · kg, 17 ft · lb)**

⚠ WARNING

Make sure the brake hoses are routed properly.

5. Remove:
   - steering stem nut
   - upper bracket

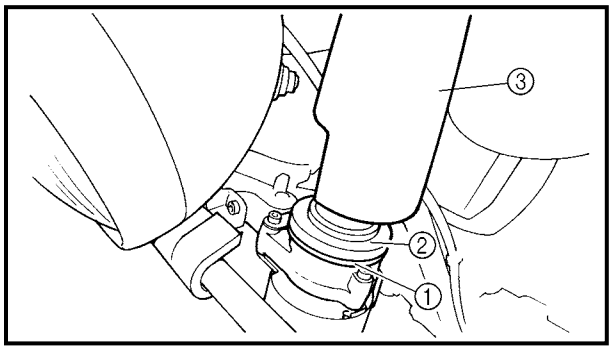

6. Install:
   - upper fork washer ①
   - upper fork spacer ②
   - upper fork cover ③

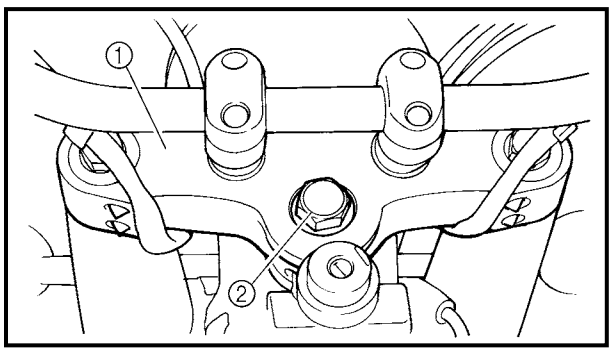

7. Install:
   - upper bracket ①
   - steering stem nut ②

   130 Nm (13.0 m · kg, 94 ft · lb)

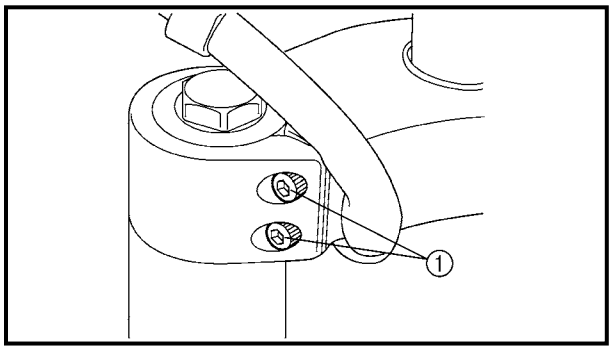

8. Tighten:
   - upper bracket pinch bolts ①

	10 Nm (1.0 m · kg, 7.2 ft · lb)

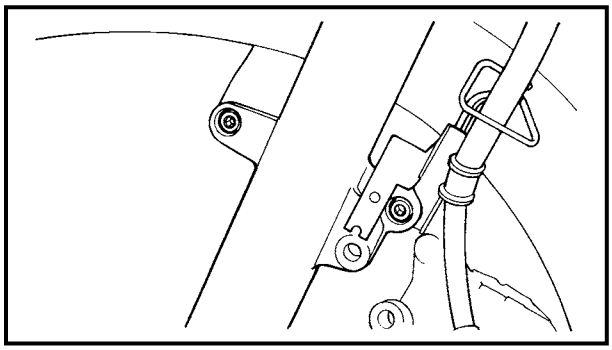

9. Install:
   - brake hose holder
   - front fender

	23 Nm (2.3 m · kg, 17 ft · lb)

10. Install:
   - front wheel
     Refer to “FRONT WHEEL AND BRAKE DISCS”.

EAS00664
HANDLEBAR

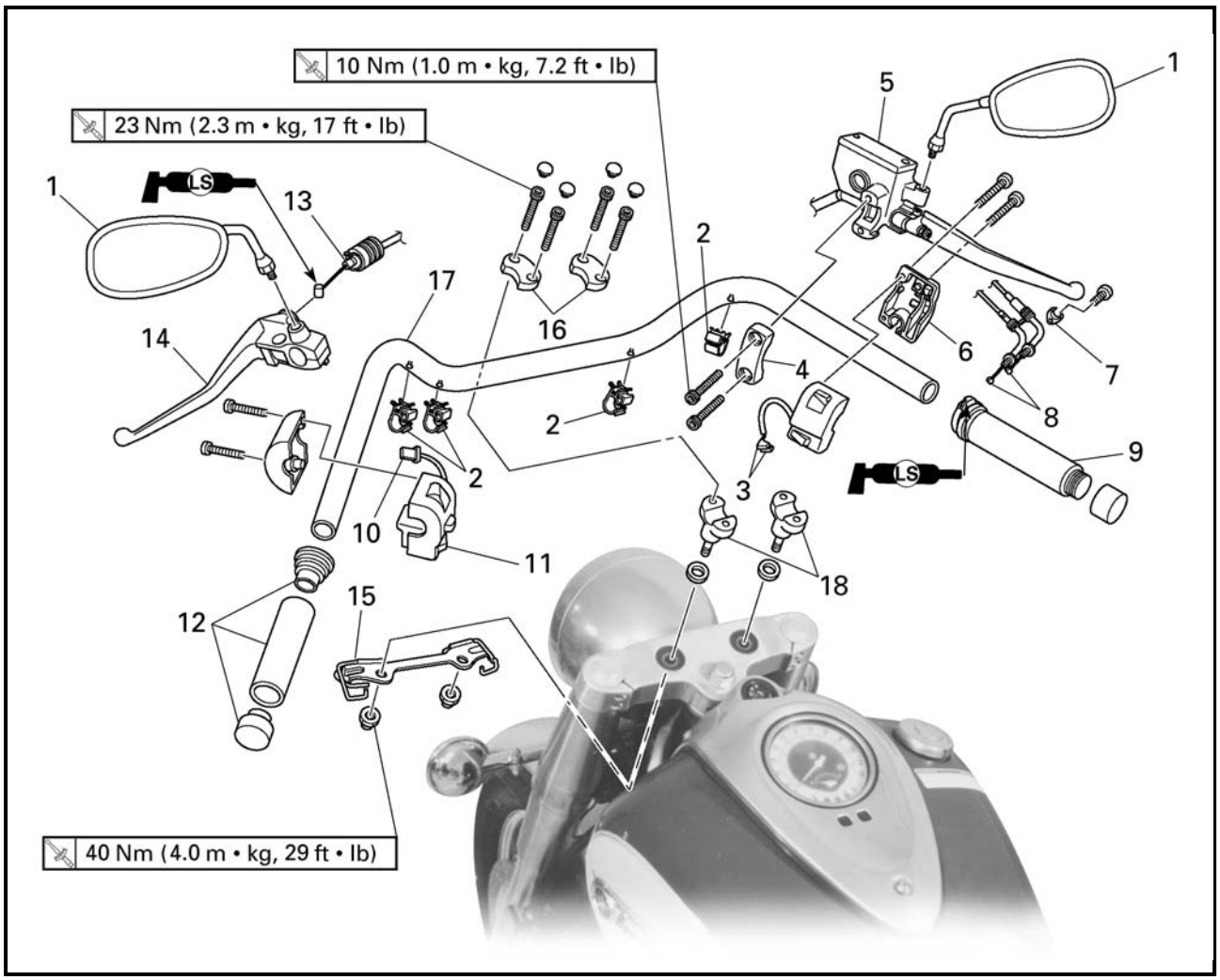

Order	Job/Part	Q'ty	Remarks
	Removing the handlebar		Remove the parts in the order listed.
1	Rear view mirror (left and right)	2	
2	Plastic clamp	4	
3	Front brake light switch connector	2	Disconnect.
4	Brake master cylinder holder	1	
5	Brake master cylinder	1	
6	Right handlebar switch	1	
7	Throttle cable holder	1	
8	Throttle cable	2	Disconnect.
9	Throttle grip	1	
10	Clutch switch connector	1	Disconnect.

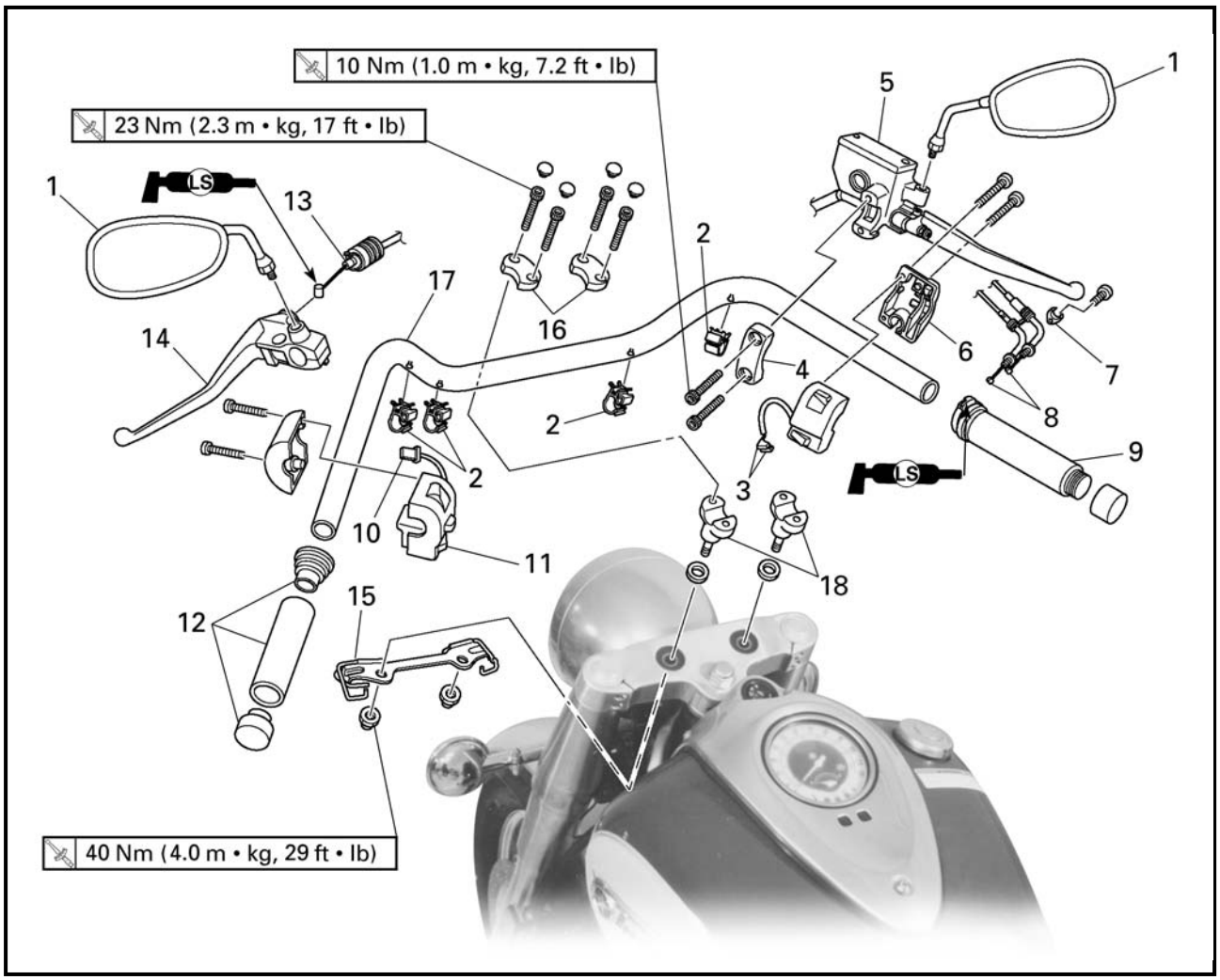

Order	Job/Part	Q'ty	Remarks
11	Left handlebar switch	1	
12	Handlebar grip	1	
13	Clutch cable	1	Disconnect.
14	Clutch lever holder	1	
15	Cable guide	1	
16	Upper handlebar holder	2	
17	Handlebar	1	
18	Lower handlebar holder	2	
			For installation, reverse the removal procedure.

EAS00666
REMOVING THE HANDLEBAR

1. Stand the motorcycle on a level surface.

WARNING

Securely support the motorcycle so that there is no danger of it falling over.

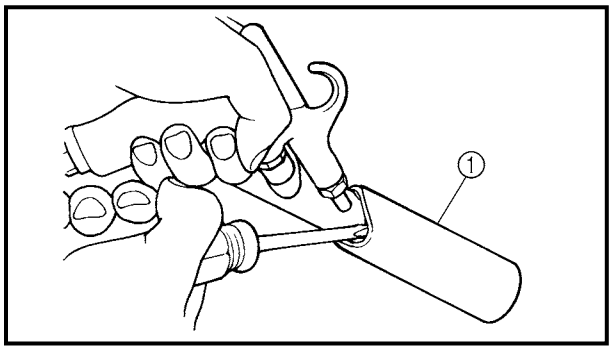

2. Remove:
   - handlebar grip ①

NOTE:

Blow compressed air between the handlebar and the handlebar grip, and gradually push the grip off the handlebar.

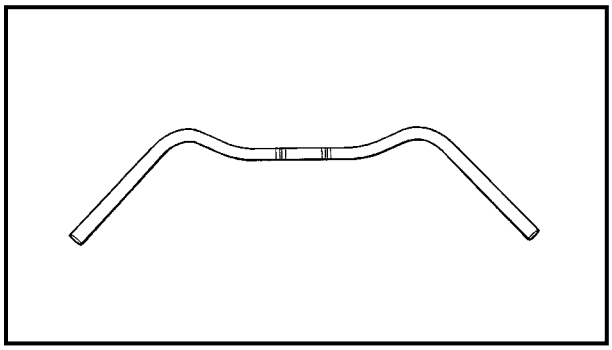

EAS00668
CHECKING THE HANDLEBAR

1. Check:
   - handlebar
     Bends/cracks/damage → Replace.

WARNING

Do not attempt to straighten a bent handlebar as this may dangerously weaken it.

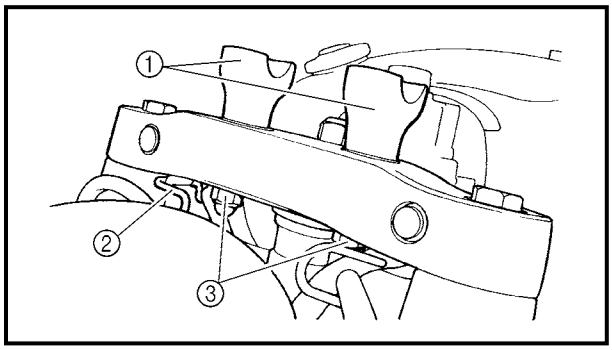

EAS00670
INSTALLING THE HANDLEBAR

1. Install:
   - washers
   - lower handlebar holders ①
   - cable guide ②

NOTE:

Temporarily tighten the nuts ③.

2. Install:
   - handlebar
   - upper handlebar holders

23 Nm (2.3 m · kg, 17 ft · lb)

CAUTION:

- **First, tighten the bolts on the front side of the handlebar holder, then on the rear side.**
- **Turn the handlebar all the way to the left and right. If there is any contact with the fuel tank, adjust the handlebar position.**

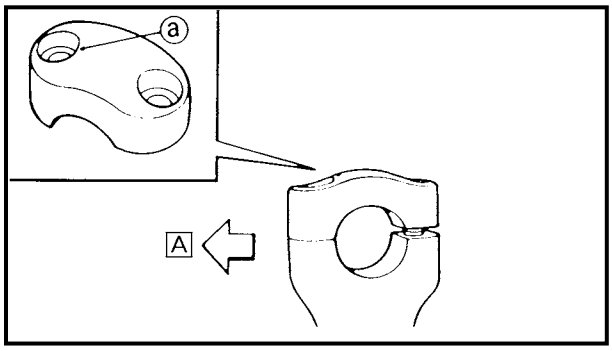

NOTE:
- The upper handlebar holders should be installed with the arrows ⓐ facing forward Ⓐ.
- Align the match marks ⓑ on the handlebar with the upper surface of the lower handlebar holders.

3. Tighten:
   - lower handlebar holder nuts

40 Nm (4.0 m · kg, 29 ft · lb)

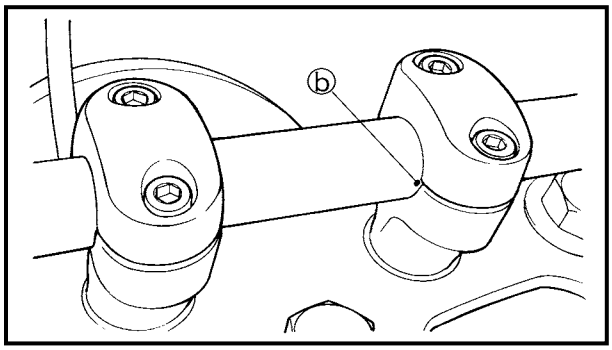

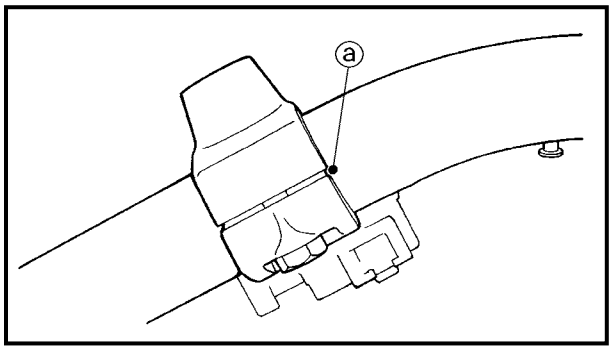

4. Install:
   - clutch lever

NOTE:
Align the slit of clutch lever holder with the punch mark ⓐ on the handlebar.

5. Install:
   - clutch cable

NOTE:
Lubricate the end of the clutch cable with a thin coat of lithium soap base grease.

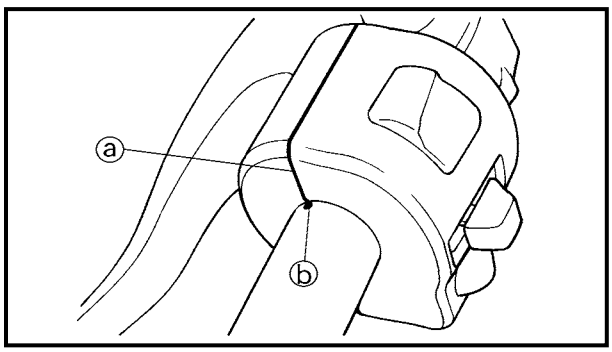

6. Install:
   - left handlebar switch

NOTE:
Align the end ⓐ of the left handlebar switch with the punch mark ⓑ on the handlebar.

7. Connect:
   - clutch switch connector

8. Install:
   - handlebar grip

▼▼▼▼▼▼▼▼▼▼▼▼▼▼▼▼▼▼▼▼▼▼▼▼▼▼▼▼▼▼▼▼

a. Apply a thin coat of rubber adhesive onto the left end of the handlebar.
b. Slide the handlebar grip over the left end of the handlebar.
c. Wipe off any excess rubber adhesive with a clean rag.

⚠ WARNING

Do not touch the handlebar grip until the rubber adhesive has fully dried.

▲▲▲▲▲▲▲▲▲▲▲▲▲▲▲▲▲▲▲▲▲▲▲▲▲▲▲▲▲▲▲▲

9. Install:
   - throttle grip
10. Connect:
   - throttle cable

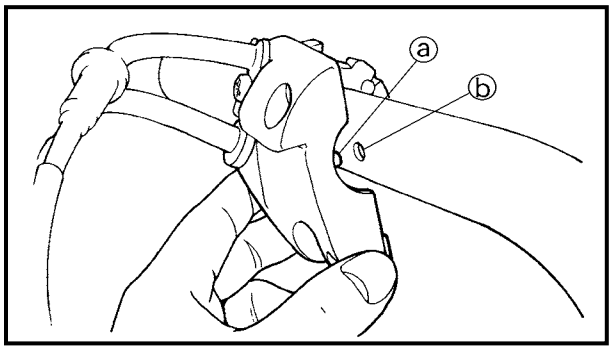

11. Install:
   - right handlebar switch

NOTE:

Align the projection ⓐ on the right handlebar switch with the hole ⓑ in the handlebar.

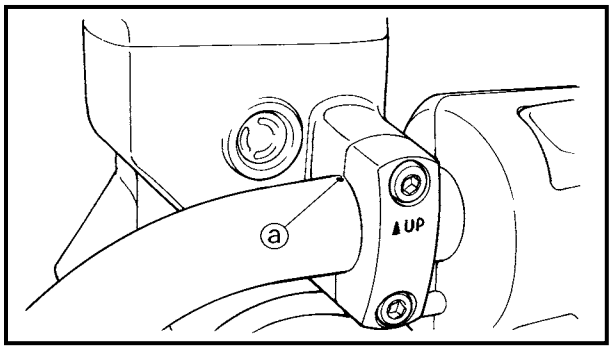

12. Install:
   - brake master cylinder
   - brake master cylinder holder

10 Nm (1.0 m · kg, 7.2 ft · lb)

NOTE:

- Install the brake master cylinder holder with the "UP" mark facing up.
- Align the end of the brake master cylinder holder with the punch mark ⓐ in the handlebar.

- First, tighten the upper bolt, then the lower bolt.

13.Connect:
- front brake light switch connector

14.Install:
- plastic clamp
- rear view mirrors

15.Adjust:
- clutch cable free play
  Refer to "ADJUSTING THE CLUTCH CABLE FREE PLAY" in chapter 3.

Clutch cable free play (at the end of the clutch lever)
10 ~ 15 mm (0.39 ~ 0.59 in)

16.Adjust:
- throttle cable free play
  Refer to "ADJUSTING THE THROTTLE CABLE FREE PLAY" in chapter 3.

Throttle cable free play (at the flange of the throttle grip)
4 ~ 8 mm (0.16 ~ 0.31 in)

EAS00676
STEERING HEAD

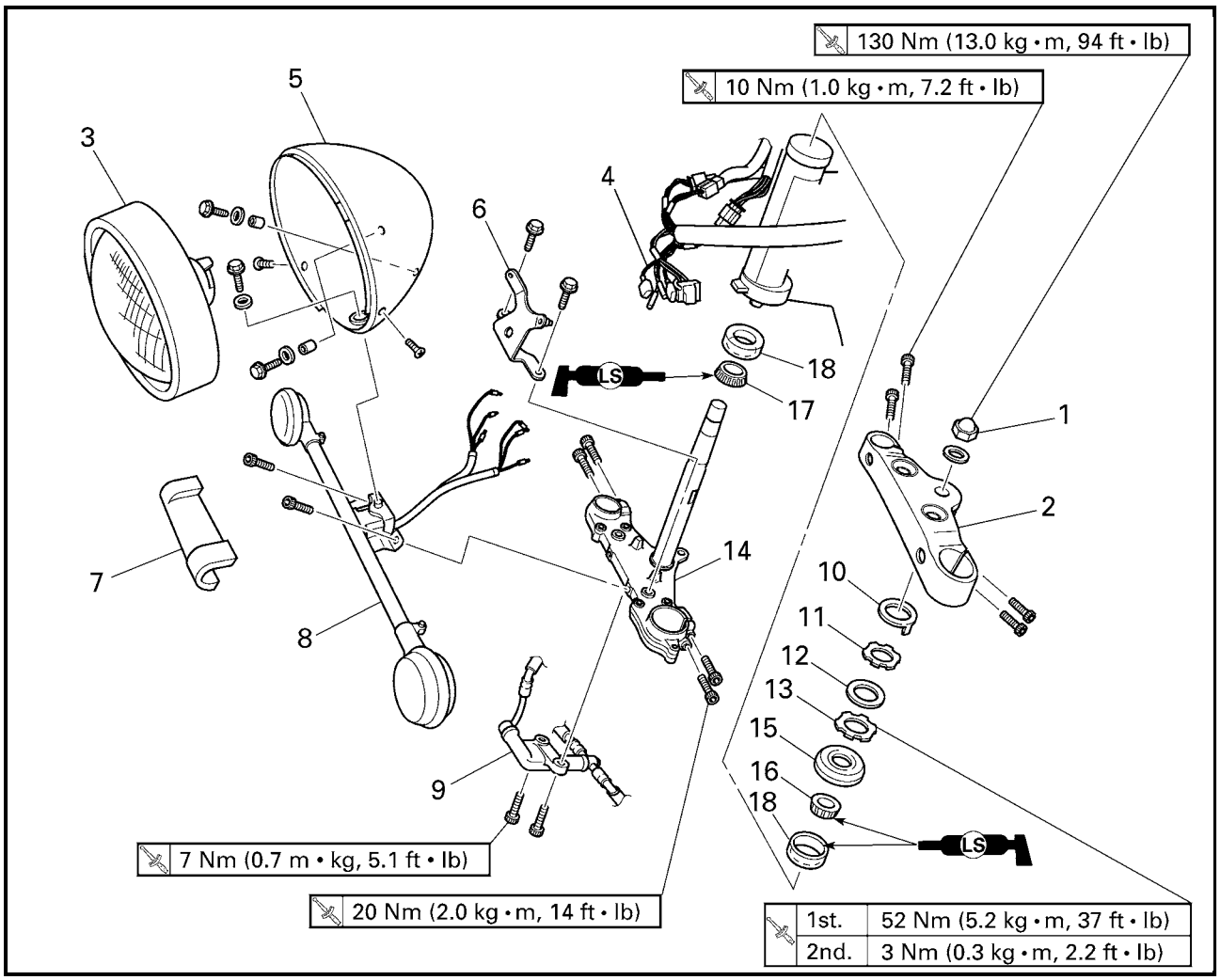

Order	Job/Part	Q'ty	Remarks
	Removing the lower bracket		Remove the parts in the order listed.
	Meter assembly		Refer to "FUEL TANK" in chapter 3.
	Front fork legs/fork covers		Refer to "FRONT FORK".
	Front wheel		Refer to "FRONT WHEEL AND BRAKE DISCS".
	Handlebar/handlebar holders		Refer to "HANDLEBAR".
1	Steering stem nut	1	
2	Upper bracket	1	
3	Headlight lens unit	1	
4	Lead (in the headlight body)	1	
5	Headlight body	1	
6	Headlight bracket	1	
7	Chrome turn signal light bracket cover	1	
8	Turn signal light bracket assembly	1	

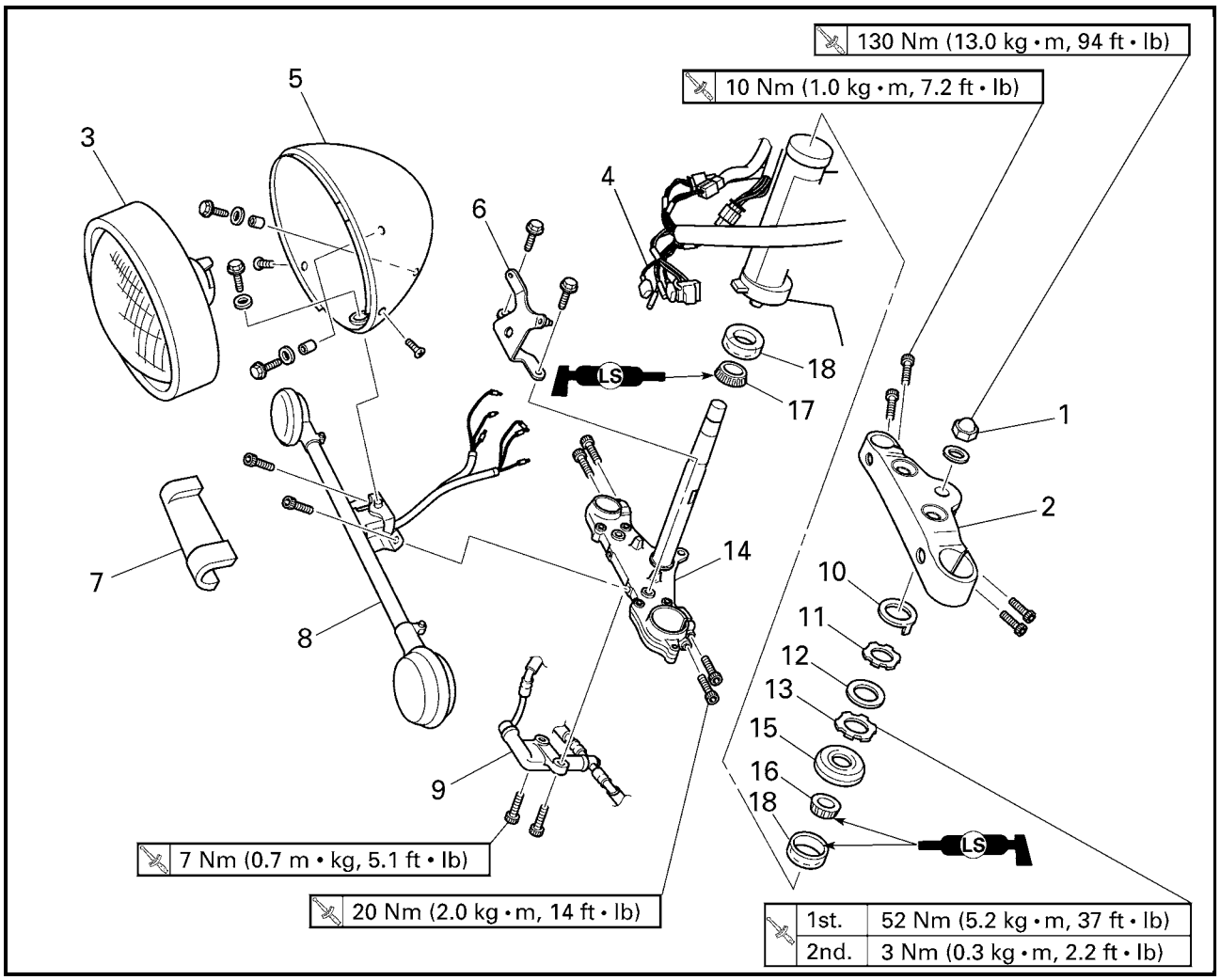

Order	Job/Part	Q'ty	Remarks
9	Brake hose joint	1	
10	Lock washer	1	
11	Upper ring nut	1	
12	Rubber washer	1	
13	Lower ring nut	1	
14	Lower bracket	1	
15	Bearing cover	1	
16	Upper bearing	1	
17	Lower bearing	1	
18	Bearing outer race	2	
			For installation, reverse the removal procedure.

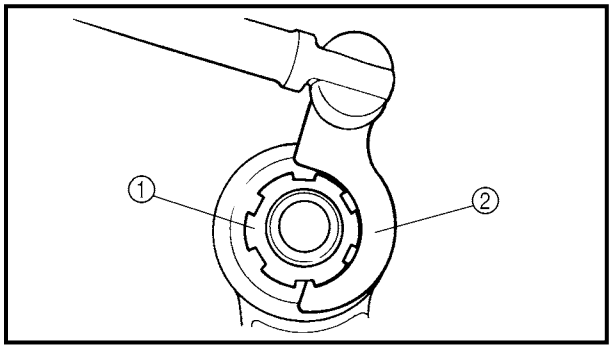

EAS00677
REMOVING THE LOWER BRACKET

1. Stand the motorcycle on a level surface.

⚠ WARNING

Securely support the motorcycle so that there is no danger of it falling over.

2. Remove:
   - lower ring nut ①
     (with the special tool ②)

	Ring nut wrench **YU-33975**

⚠ WARNING

Securely support the lower bracket so that there is no danger of it falling.

4

EAS00681
CHECKING THE STEERING HEAD

1. Wash:
   - bearings
   - bearing races

	Recommended cleaning solvent **Kerosene**

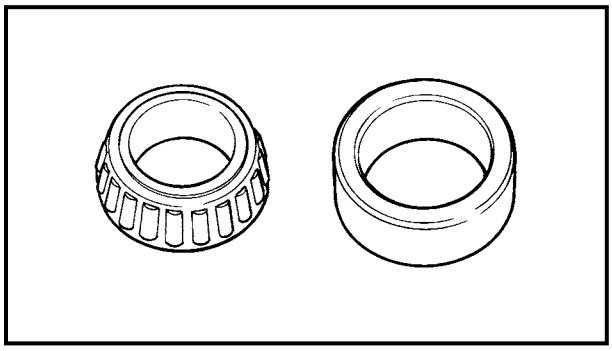

2. Check:
   - bearings
   - bearing races
     Damage/pitting→ Replace.

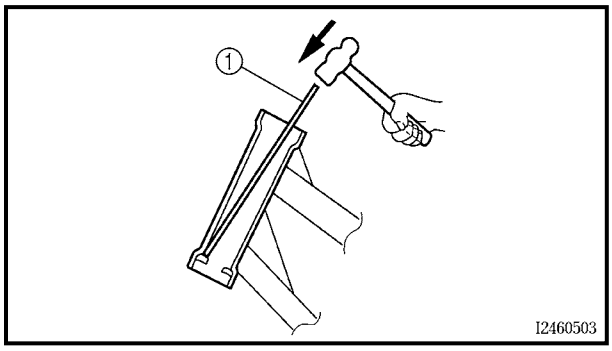

3. Replace:
   - bearings
   - bearing races

▼▼▼▼▼▼▼▼▼▼▼▼▼▼▼▼▼▼▼▼▼▼▼▼▼▼▼▼▼▼▼▼▼▼

a. Remove the bearing races from the steering head pipe with a long rod ① and hammer.

b. Remove the bearing race from the lower bracket with a floor chisel ② and hammer.

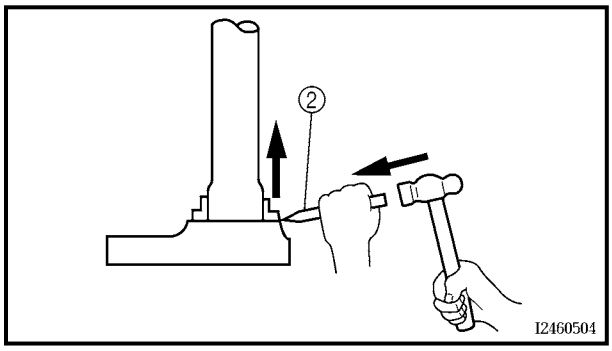

c. Install a new rubber seal and new bearing races.

▲▲▲▲▲▲▲▲▲▲▲▲▲▲▲▲▲▲▲▲▲▲▲▲▲▲▲▲▲▲

CAUTION:

If the bearing race is not installed properly, the steering head pipe could be damaged.

NOTE:

- Always replace the bearings and bearing races as a set.
- Whenever the steering head is disassembled, replace the rubber seal.

4. Check:
   - upper bracket
   - lower bracket
     (along with the steering stem)
     Bends/cracks/damage → Replace.

EAS00683

INSTALLING THE STEERING HEAD

1. Lubricate:
   - upper bearing
   - lower bearing
   - bearing races

	Recommended lubricant **Lithium soap base grease**

2. Install:
   - upper bearing
   - lower bearing
   - bearing races
   - bearing cover
   - lower bracket

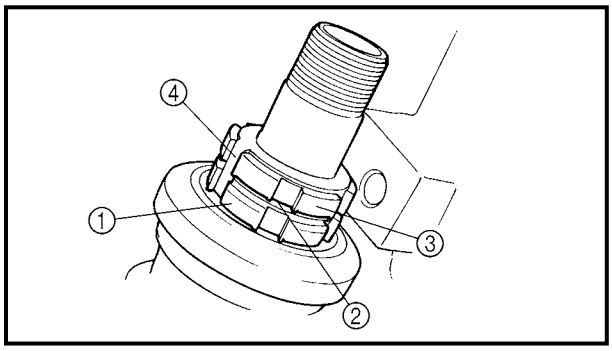

3. Install:
   - lower ring nut ①
   - rubber washer ②
   - upper ring nut ③
   - lock washer ④

   Refer to "CHECKING AND ADJUSTING THE STEERING HEAD" in chapter 3.

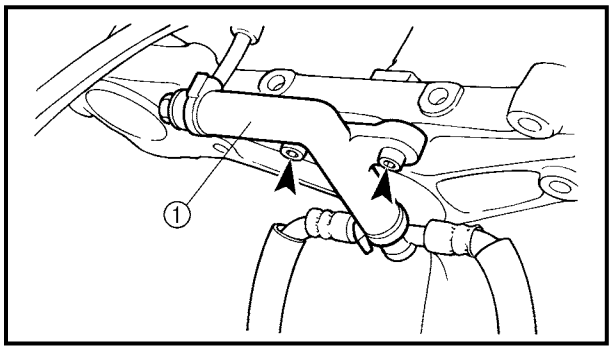

4. Install:
   - brake hose joint ①

	7 Nm (0.7 m · kg, 5.1 ft · lb)

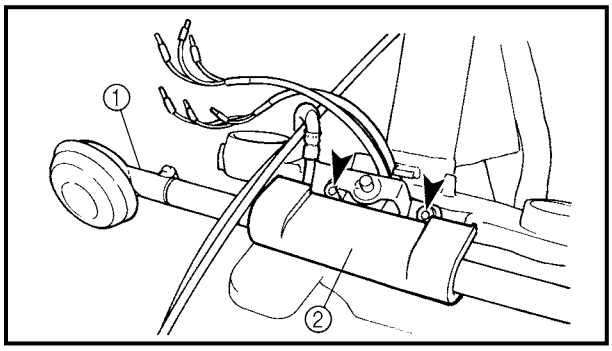

5. Install:
   - turn signal light bracket assembly ①
   - chrome turn signal light bracket cover ②

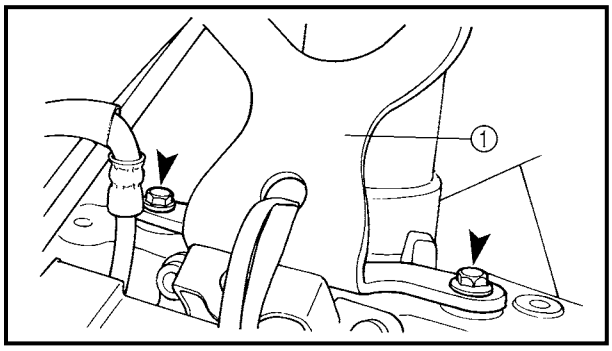

6. Install:
   - headlight bracket ①

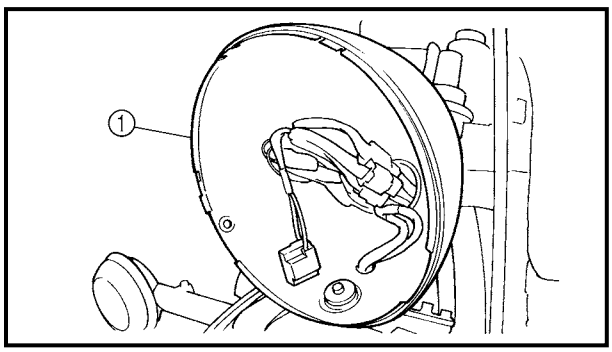

7. Install:
   - headlight body ①
8. Connect:
   - leads
     (in the headlight body)
9. Install:
   - headlight lens unit

10.Install:
- upper bracket
- steering stem nut
- front fork legs
  Refer to “FRONT FORK”.

11.Install:
- handlebar
  Refer to “HANDLEBAR”.
- front fork legs
  Refer to “FRONT FORK”.
- meter assembly
  Refer to “FUEL TANK” in chapter 3.

****

REAR SHOCK ABSORBER AND SWINGARM

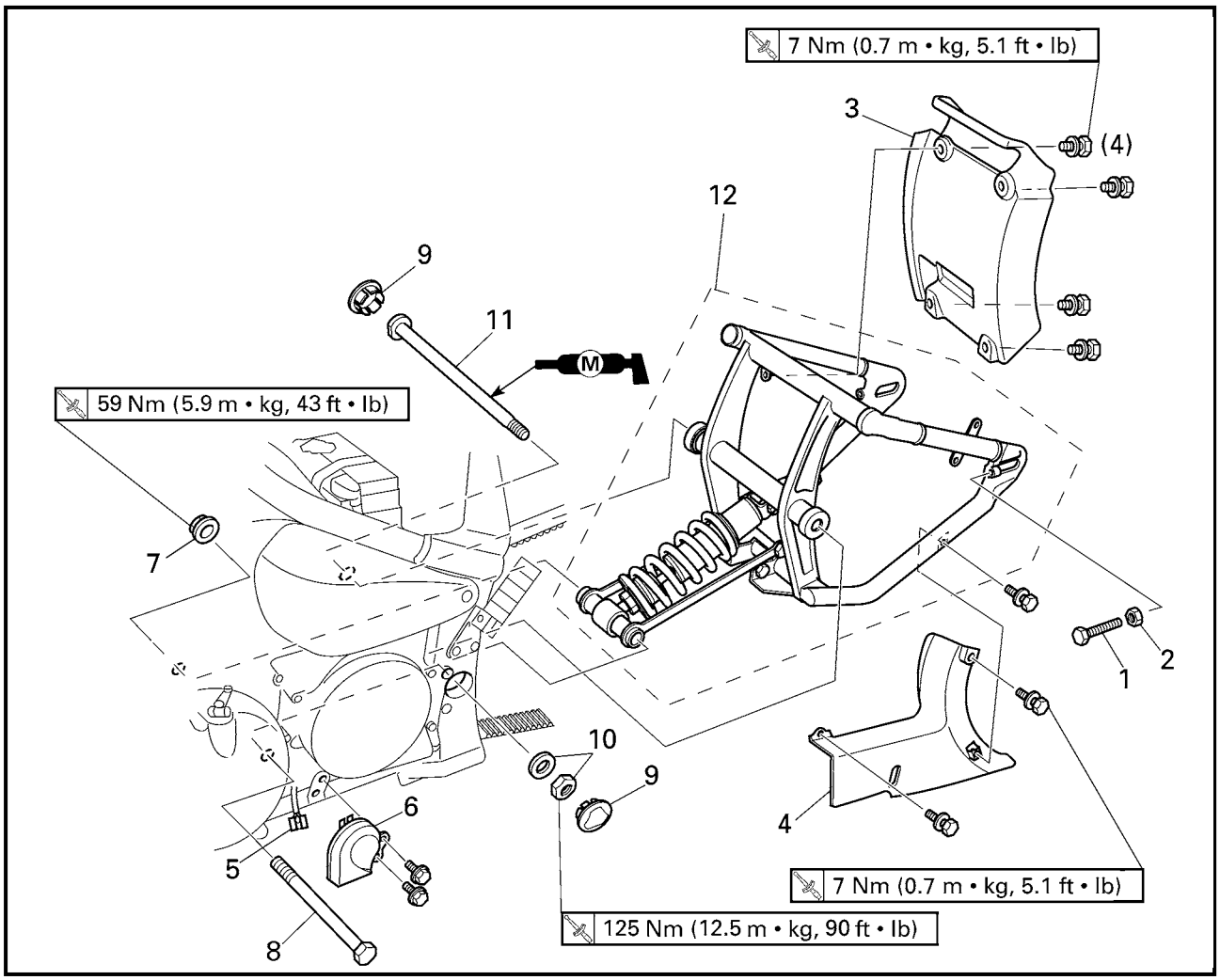

Order	Job/Part	Q'ty	Remarks
	Removing the rear shock absorber and swingarm		Remove the parts in the order listed.
	Rear wheel		Refer to "REAR WHEEL, BRAKE DISC AND REAR WHEEL PULLEY".
1	Adjusting bolt	1	
2	Locknut	1	
3	Mud guard	1	
4	Lower drive belt cover	1	
5	Horn coupler	1	Disconnect.
6	Horn	1	
7	Self-locking nut	1	
8	Bolt (shock absorber-connecting arm-frame)	1	ℓ = 158 mm (6.22 in)
9	Cover (left and right)	2	
10	Pivot shaft nut/washer	1/1	

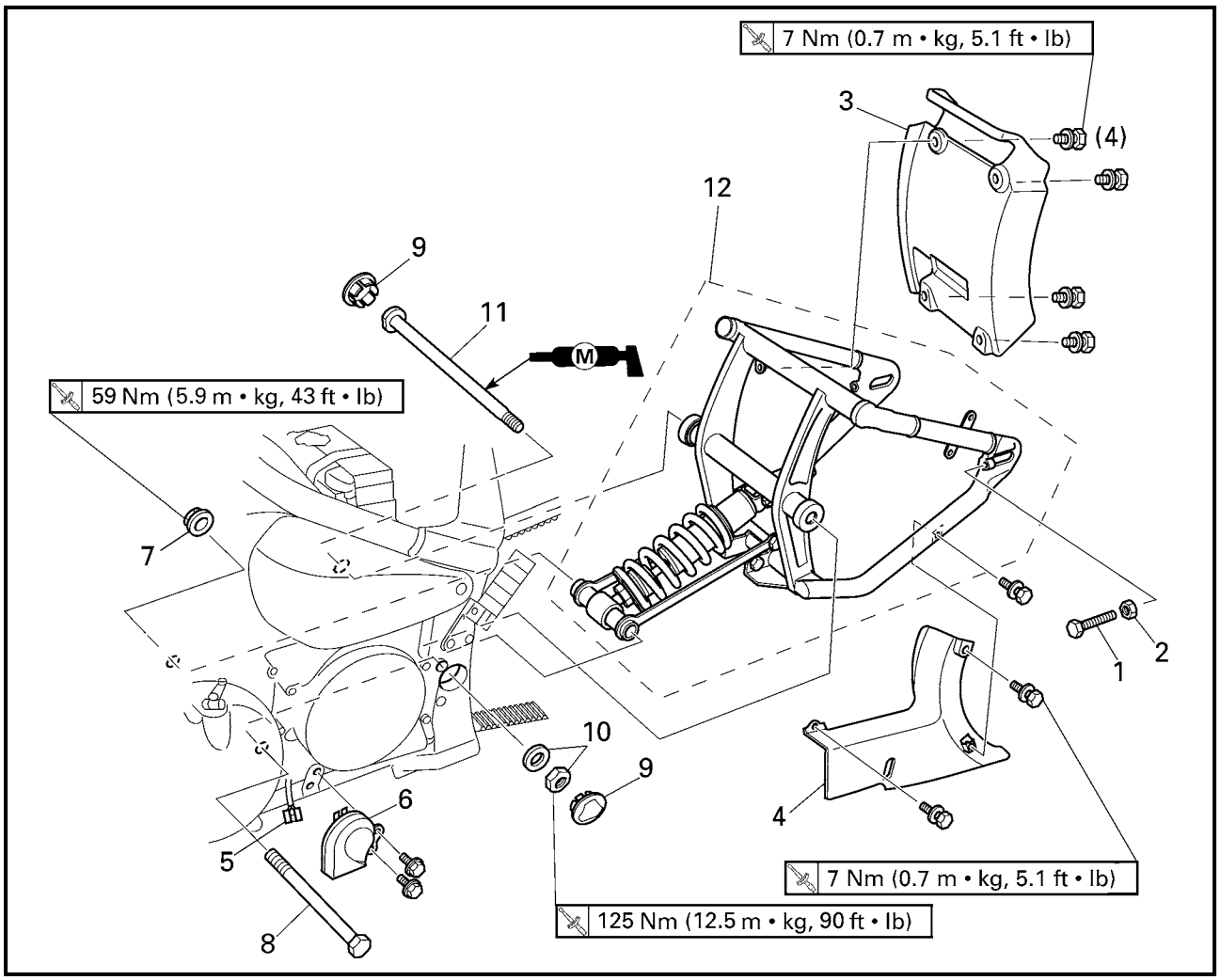

Order	Job/Part	Q'ty	Remarks
11	Pivot shaft	1	
12	Rear shock absorber and swingarm assembly	1	For installation, reverse the removal procedure.

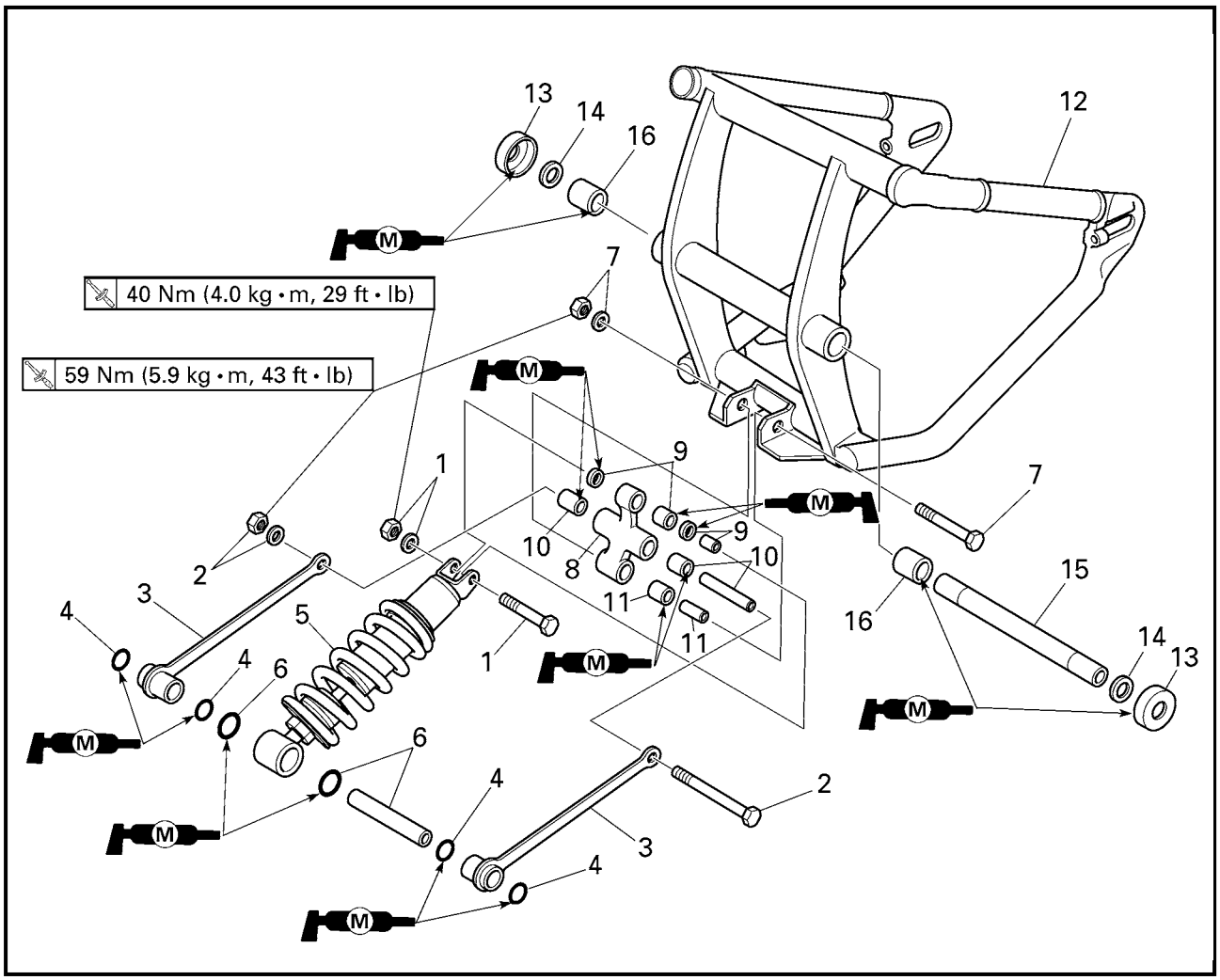

Order	Job/Part	Q'ty	Remarks
	Removing the rear shock absorber and swingarm		Remove the parts in the order listed.
1	Self-locking nut/washer/bolt	1/1/1	Bolt ℓ = 53 mm (2.19 in)
2	Self-locking nut/washer/bolt	1/1/1	Bolt ℓ = 124 mm (4.88 in)
3	Connecting arm	2	
4	O-ring	4	
5	Rear shock absorber	1	
6	Spacer/O-ring	1/2	
7	Self-locking nut/washer/bolt	1/1/1	Bolt ℓ = 77 mm (3.03 in)
8	Relay arm	1	
9	Spacer/oil seal/bearing	1/2/1	
10	Spacer/bearing	1/2	

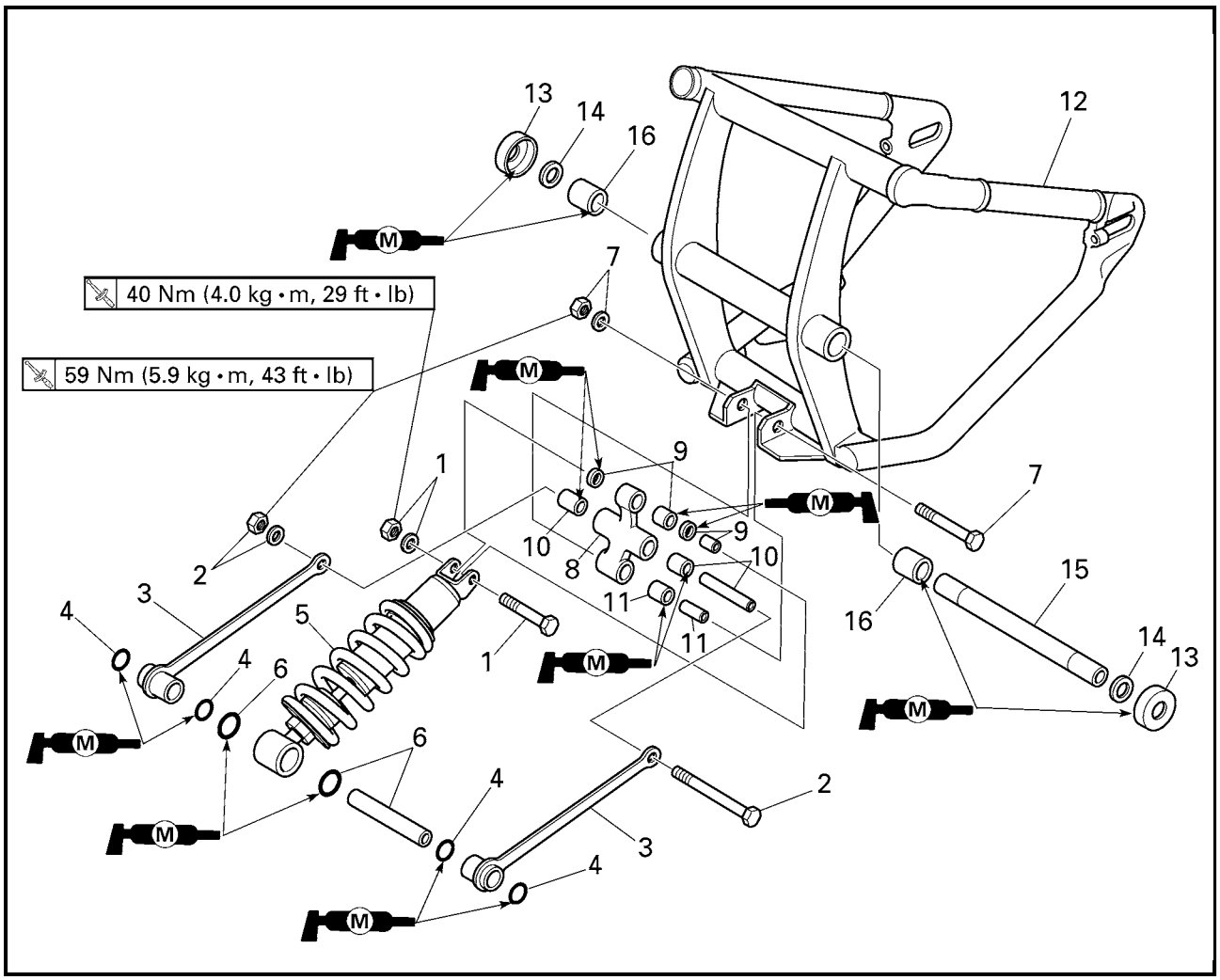

Order	Job/Part	Q'ty	Remarks
11	Spacer/bearing	1/1	
12	Swingarm	1	
13	Dust cover	2	
14	Washer	2	
15	Spacer	1	
16	Bearing	2	
			For installation, reverse the removal procedure.

EAS00686
HANDLING THE REAR SHOCK ABSORBER

⚠ WARNING

This rear shock absorber contains highly compressed nitrogen gas. Before handling the rear shock absorber, read and make sure you understand the following information. The manufacturer cannot be held responsible for property damage or personal injury that may result from improper handling of the rear shock absorber.

- **Do not tamper or attempt to open the rear shock absorber.**
- **Do not subject the rear shock absorber to an open flame or any other source of high heat. High heat can cause an explosion due to excessive gas pressure.**
- **Do not deform or damage the rear shock absorber in any way. Rear shock absorber damage will result in poor damping performance.**

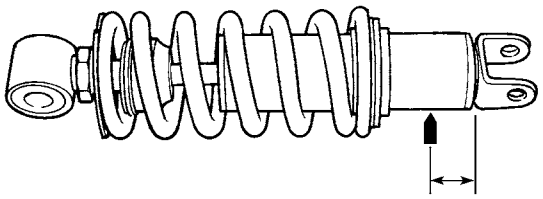

EAS00689
DISPOSING OF A REAR SHOCK ABSORBER AND GAS CYLINDER

Gas pressure must be released before disposing of a rear shock absorber and gas cylinder. To release the gas pressure, drill a 2 ~ 3-mm (0.08 ~ 0.12 in) hole through the gas cylinder at a point 15 mm (0.6 in) from its end as shown.

⚠ WARNING

Wear eye protection to prevent eye damage from released gas or metal chips.

EAS00703
REMOVING THE REAR SHOCK ABSORBER AND SWINGARM

1. Stand the motorcycle on a level surface.

⚠ WARNING

Securely support the motorcycle so that there is no danger of it falling over.

NOTE:

Place the motorcycle on a suitable stand so that the rear wheel is elevated.

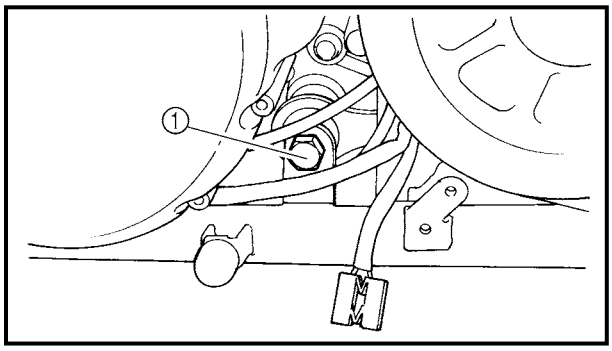

2. Remove:
   - bolt (shock absorber - connecting arm - frame) ①

NOTE:
When removing the bolt (shock absorber - connecting arm - frame) ①, hold the swingarm so that it does not drop down.

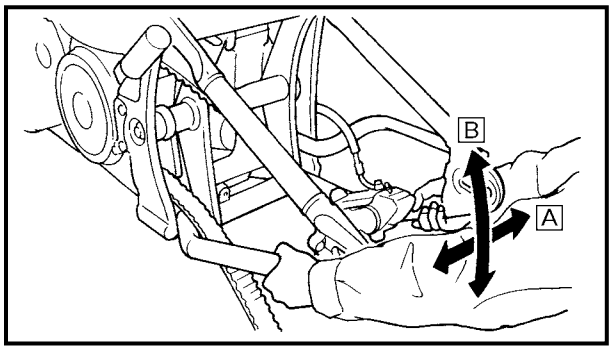

3. Measure:
   - swingarm free play
   - swingarm vertical movement

▼▼▼▼▼▼▼▼▼▼▼▼▼▼▼▼▼▼▼▼▼▼▼▼▼▼▼▼▼▼

a. Measure the tightening torque of the pivot shaft nut.

Pivot shaft nut
125 Nm (12.5 m • kg, 90 ft • lb)

b. Measure the swingarm free play [A] by moving the swingarm from side to side.

c. If the swingarm free play is out of specification, check the spacers, bearings, washers, and dust covers.

Swingarm free play (at the end of the swingarm)
Zero mm (Zero in)

d. Check the swingarm vertical movement [B] by moving the swingarm up and down.

   If swingarm vertical movement is not smooth or if there is binding, check the spacers, bearings, washers, and dust covers.

▲▲▲▲▲▲▲▲▲▲▲▲▲▲▲▲▲▲▲▲▲▲▲▲▲▲▲▲▲▲

EAS00696
CHECKING THE REAR SHOCK ABSORBER

1. Check:
   - rear shock absorber rod
     Bends/damage → Replace the rear shock absorber assembly.
   - rear shock absorber
     Gas leaks/oil leaks → Replace the rear shock absorber assembly.

- spring
  Damage/wear → Replace the rear shock absorber assembly.
- gas cylinder
  Damage/gas leaks → Replace.
- bushings
  Damage/wear → Replace.
- O-ring
  Damage/wear → Replace.
- bolts
  Bends/damage/wear → Replace.

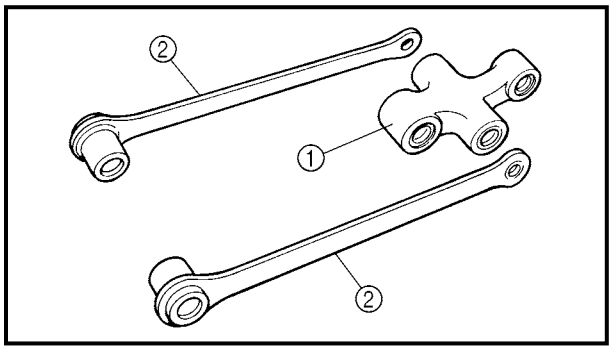

CHECKING THE RELAY ARM AND CONNECTING ARM

1. Check:
   - relay arm ①
   - connecting arms ②
     Damage/wear → Replace.
   - bearings
   - oil seals
     Damage/pitting → Replace.
   - spacers
   - Damage/scratches → Replace.

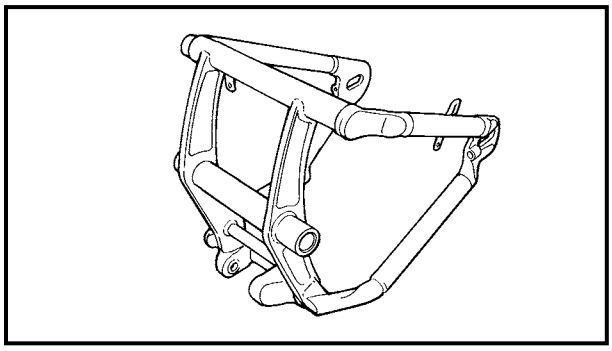

CHECKING THE SWINGARM

1. Check:
   - swingarm
     Bends/cracks/damage → Replace.

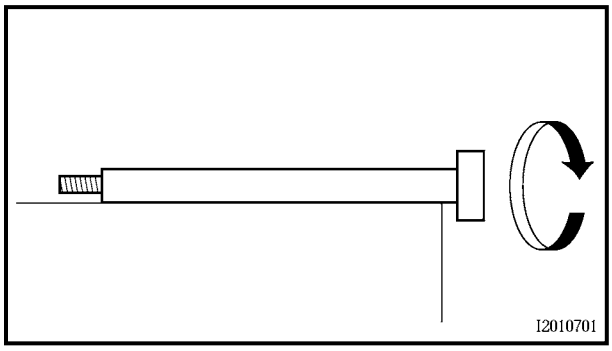

2. Check:
   - pivot shaft
     Roll the pivot shaft on a flat surface.
     Bends → Replace.

⚠ WARNING

Do not attempt to straighten a bent pivot shaft.

3. Wash:
   - pivot shaft
   - dust covers
   - spacer
   - bearings

	Recommended cleaning solvent **Kerosine**

4. Check:
   - dust covers
   - spacer
   - oil seals
     Damage/wear → Replace.
   - bearings
     Damage/pitting → Replace.

EAS00711
INSTALLING THE REAR SHOCK ABSORBER AND SWINGARM

1. Lubricate:
   - bearings
   - spacers
   - dust covers
   - O-rings
   - pivot shaft

	Recommended lubricant **Molybdenum disulfide grease**

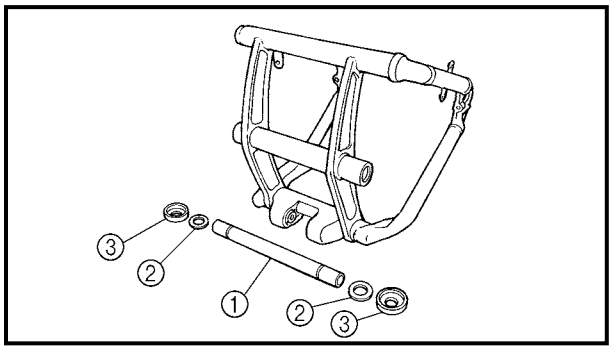

2. Install:
   - bearings
   - spacer ①
   - washers ②
   - dust covers ③

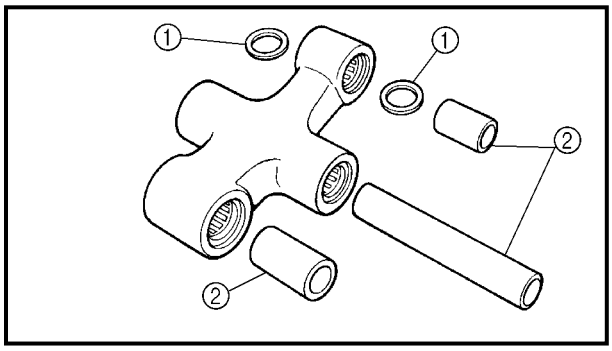

3. Install:
   - bearings
   - oil seals ①
   - spacers ②

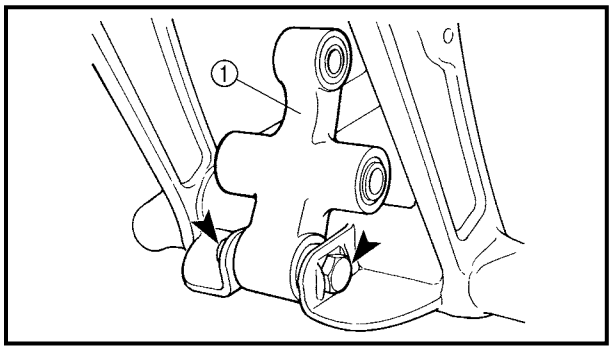

4. Install:
   - relay arm ①
     (onto the swingarm)

	59 Nm (5.9 m · kg, 43 ft · lb)

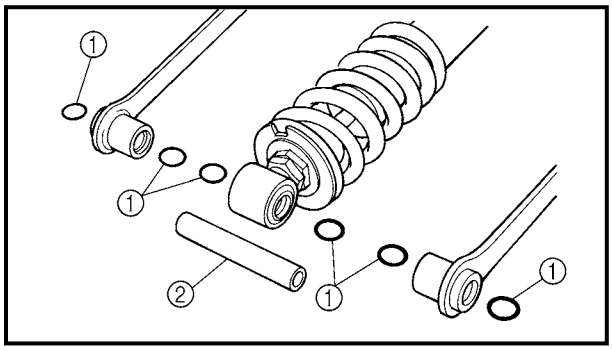

5. Install:
   - o-rings ①
   - spacer ②

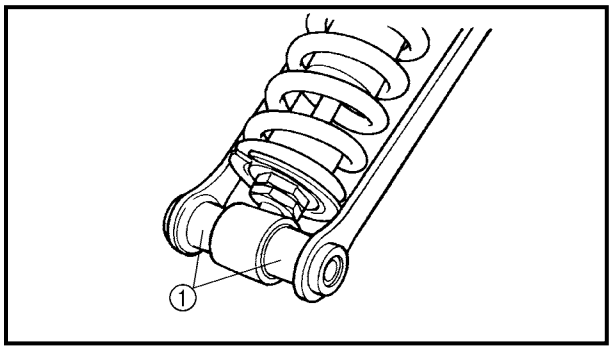

6. Install:
   - connecting arms ①
     (onto the rear shock absorber)

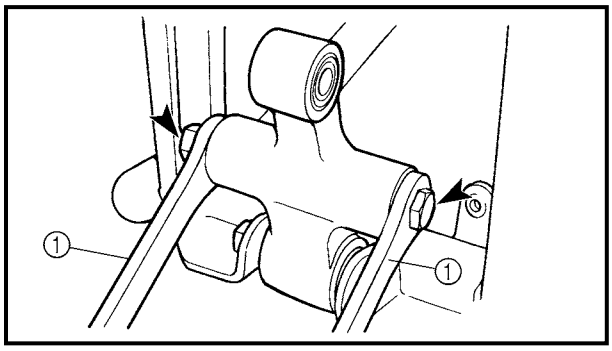

7. Install:
   - connecting arms ①
     (onto the relay arm)

	59 Nm (5.9 m · kg, 43 ft · lb)

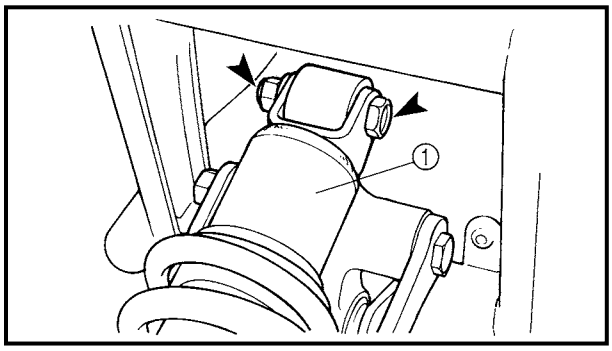

8. Install:
   - rear shock absorber ①
     (onto the relay arm)

	40 Nm (4.0 m · kg, 29 ft · lb)

9. Install:
   - rear shock absorber and swingarm assembly
   - pivot shaft
   - washer
   - pivot shaft nut

	125 Nm (12.5 m · kg, 90 ft · lb)

   - covers

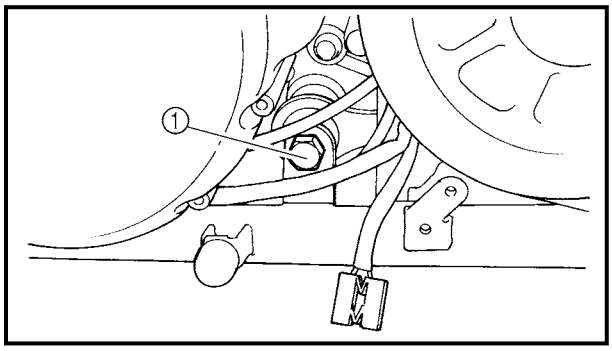

10. Install:
   - bolt (shock absorber - connecting arm - frame) ①

NOTE:
When installing the bolt (shock absorber - connecting arm - frame), hold the swingarm so that it does not drop down.

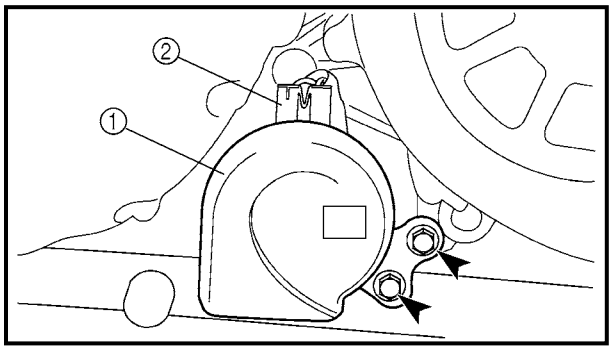

11. Install:
   - horn ①
12. Connect:
   - horn coupler ②

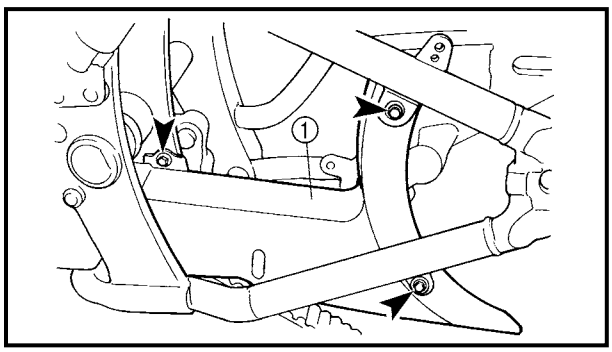

13. Install:
   - lower drive belt cover ①

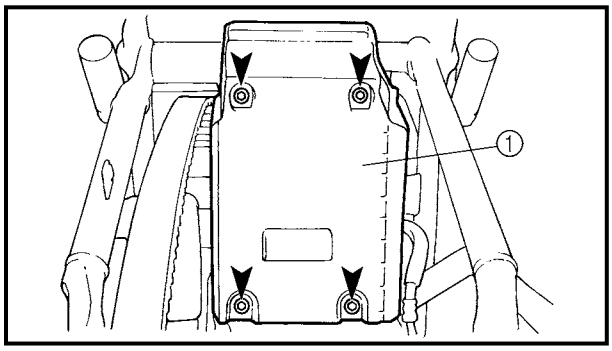

14.Install:
- mud guard ①

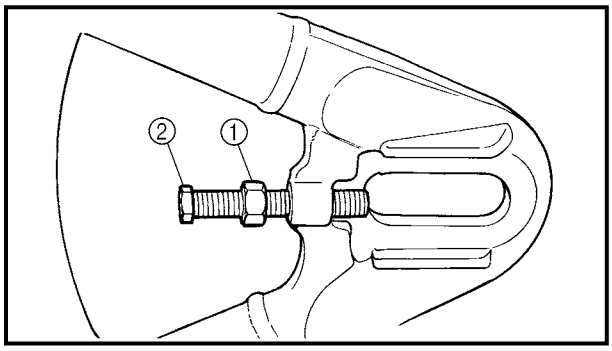

15.Install:
- locknut ①
- adjusting bolt ②

16.Install:
- rear wheel
  Refer to “REAR WHEEL, BRAKE DISC AND REAR WHEEL PULLEY”.

17.Adjust:
- drive belt slack
  Refer to “ADJUSTING THE DRIVE BELT SLACK” in chapter 3.

DRIVE BELT AND DRIVE PULLEY

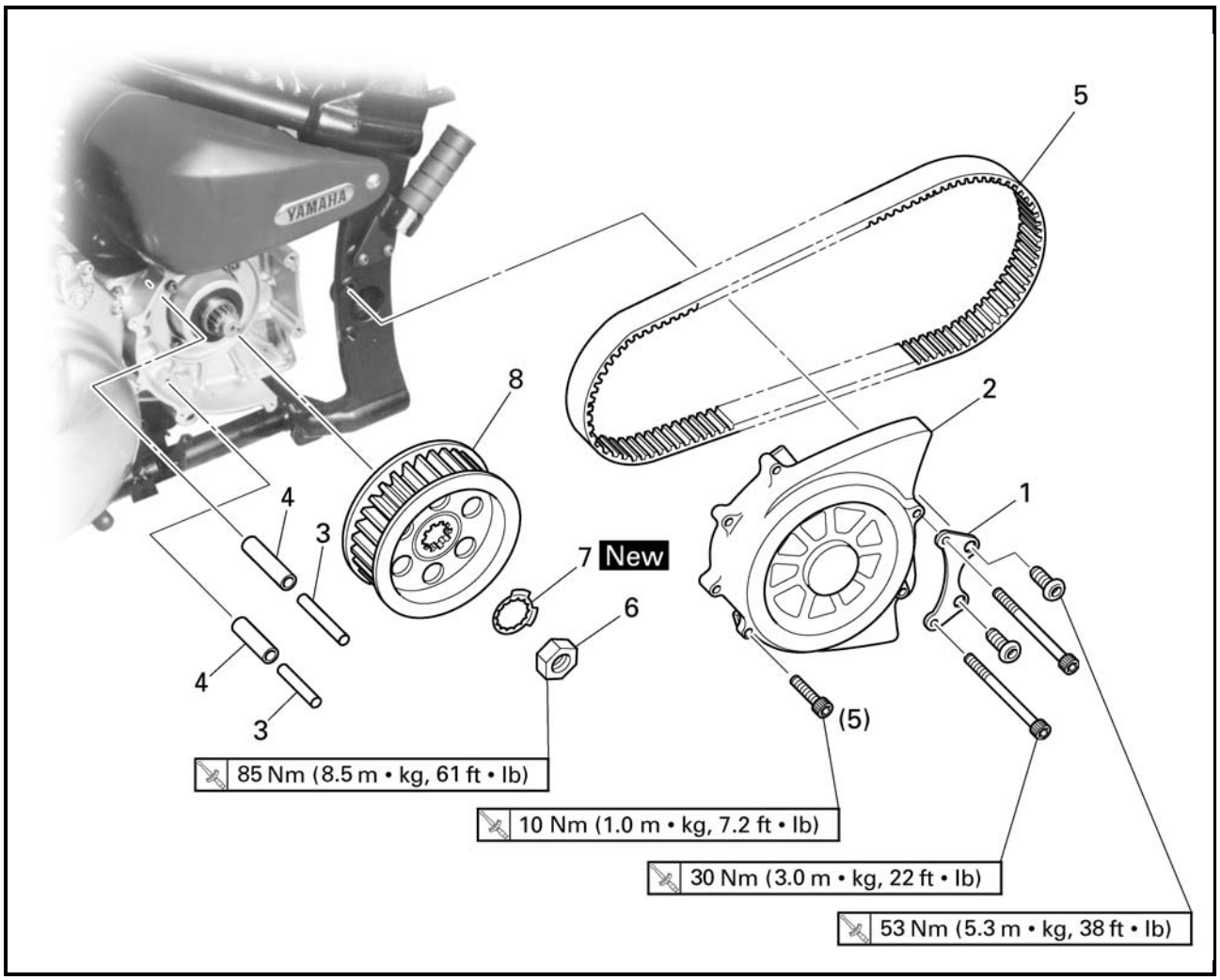

Order	Job/Part	Q'ty	Remarks
	Removing the drive belt and drive pulley		Remove the parts in the order listed.
	Rear wheel		Refer to "REAR WHEEL, BRAKE DISC AND REAR WHEEL PULLEY".
	Rear shock absorber and swingarm assembly		Refer to "REAR SHOCK ABSORBER AND SWINGARM".
1	Drive pulley cover bracket	1	
2	Drive pulley cover	1	
3	Slider	2	
4	Dowel pin	2	
5	Drive belt	1	
6	Drive pulley nut	1	
7	Lock washer	1	
8	Drive pulley	1	
			For installation, reverse the removal procedure.

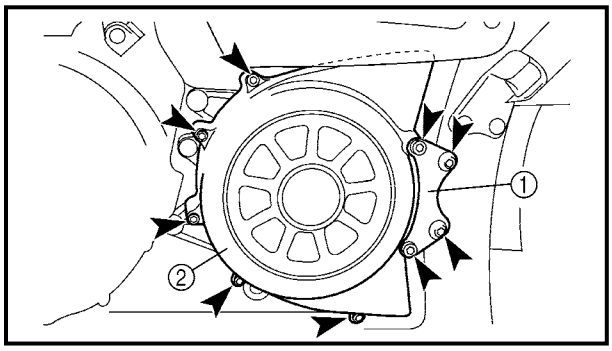

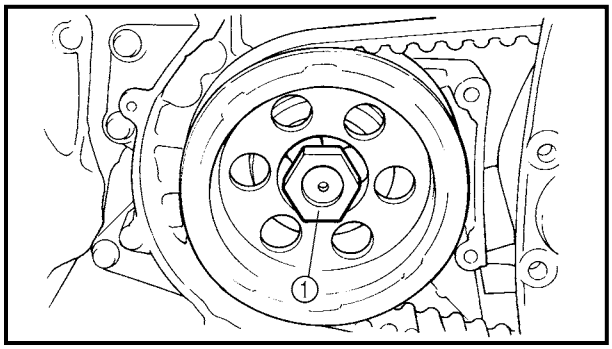

REMOVING THE DRIVE BELT AND DRIVE PULLEY

NOTE:

Loosen the drive pulley nut before remove the rear wheel.

1. Remove:
   - drive pulley cover bracket ①
   - drive pulley cover ②
2. Straighten the lock washer tab.
3. Loosen:
   - drive pulley nut ①

NOTE:

When loosening the drive pulley nut, press down on the brake pedal so the drive pulley does not move.

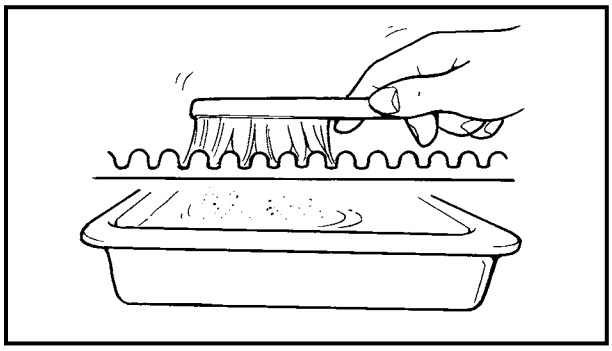

CHECKING THE DRIVE BELT

1. Clean:
   - drive belt

▼▼▼▼▼▼▼▼▼▼▼▼▼▼▼▼▼▼▼▼▼▼▼▼▼▼▼▼▼▼

a. Wipe the drive belt with a clean cloth.

b. Put the drive belt in a mixture of mild detergent and water. Then, remove any dirt from the drive belt.

c. Remove the drive belt from the mixture and rinse it off with clean water. Then, let the drive belt thoroughly dry.

▲▲▲▲▲▲▲▲▲▲▲▲▲▲▲▲▲▲▲▲▲▲▲▲▲▲▲▲▲▲

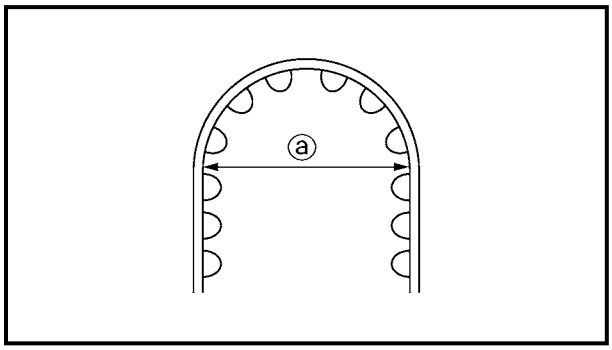

2. Check:
   - drive belt

CAUTION:

- **To protect the drive belt from damage, handle it with care.**
- **The drive belt can not be bent smaller than 127 mm (5 in) ⓐ.**
- **The removed drive belt can not be twisted inside out.**

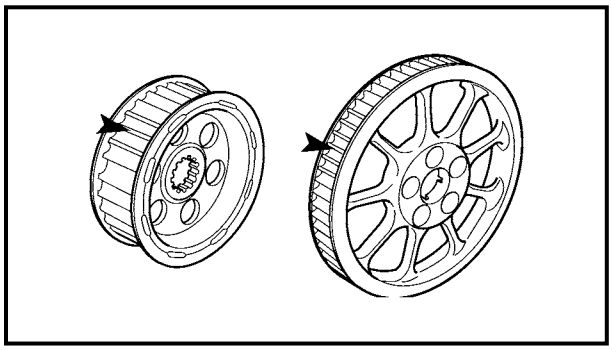

3. Check:
   - drive pulley
   - rear wheel pulley
     Bent teeth → Replace the drive belt and pulleys as a set.

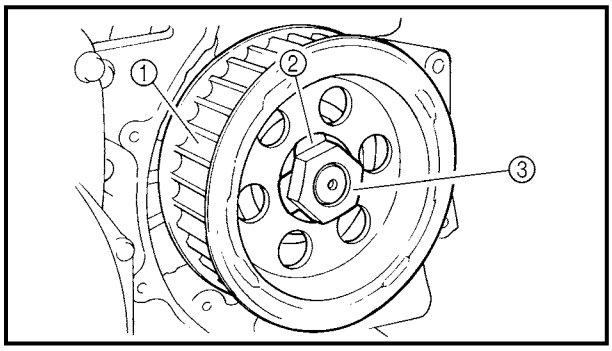

INSTALLING THE DRIVE BELT AND DRIVE PULLEY

1. Install:
   - drive pulley ①
   - lock washer ② New
   - drive pulley nut ③

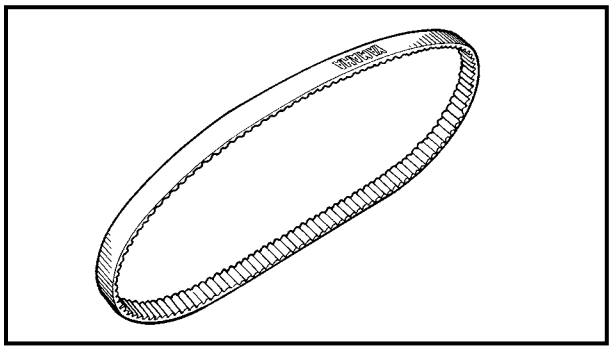

2. Install:
   - drive belt

CAUTION:

Install the drive belt facing the same way it was removed.

3. Install:
   - rear shock absorber and swingarm assembly
     Refer to "REAR SHOCK ABSORBER AND SWINGARM".
   - rear wheel
     Refer to "REAR WHEEL, BRAKE DISC AND SWINGARM".

4. Tighten:
   - drive pulley nut

85 Nm (8.5 m · kg, 61 ft · lb)

NOTE:

When tightening the drive pulley nut, press down on the brake pedal so the drive pulley does not move.

5. Bend the lock washer tab along a flat side of the nut.

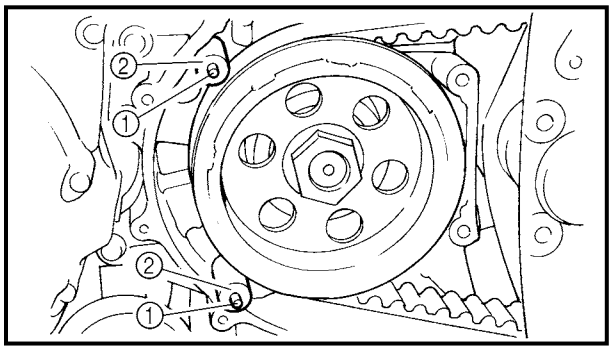

6. Install:
   - dowel pins ①
   - sliders ②

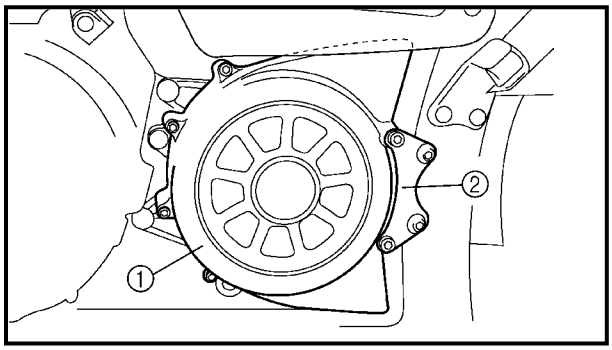

7. Install:
   - drive pulley cover ①

     10 Nm (1.0 m · kg, 7.2 ft · lb)
   - drive pulley cover bracket ②
   - bolts (M10) **53 Nm (5.3 m · kg, 38 ft · lb)**
   - bolts (M8) **30 Nm (3.0 m · kg, 22 ft · lb)**

CONTENTS
ENGINE

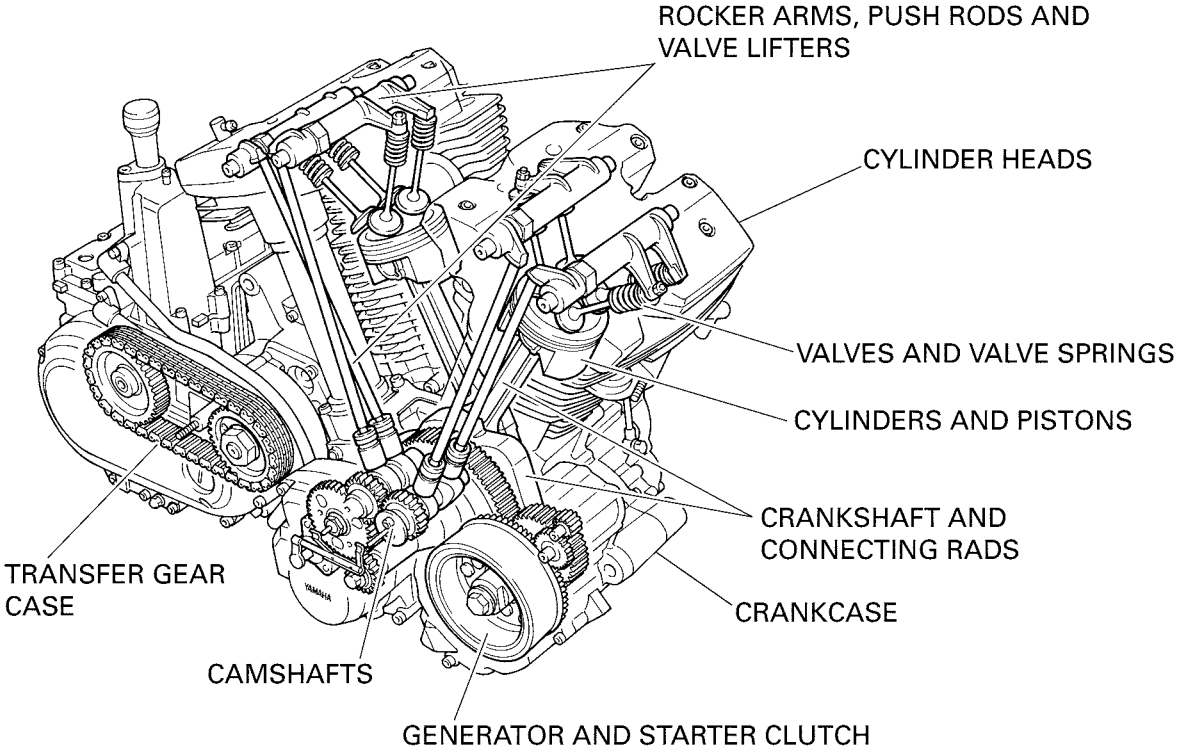

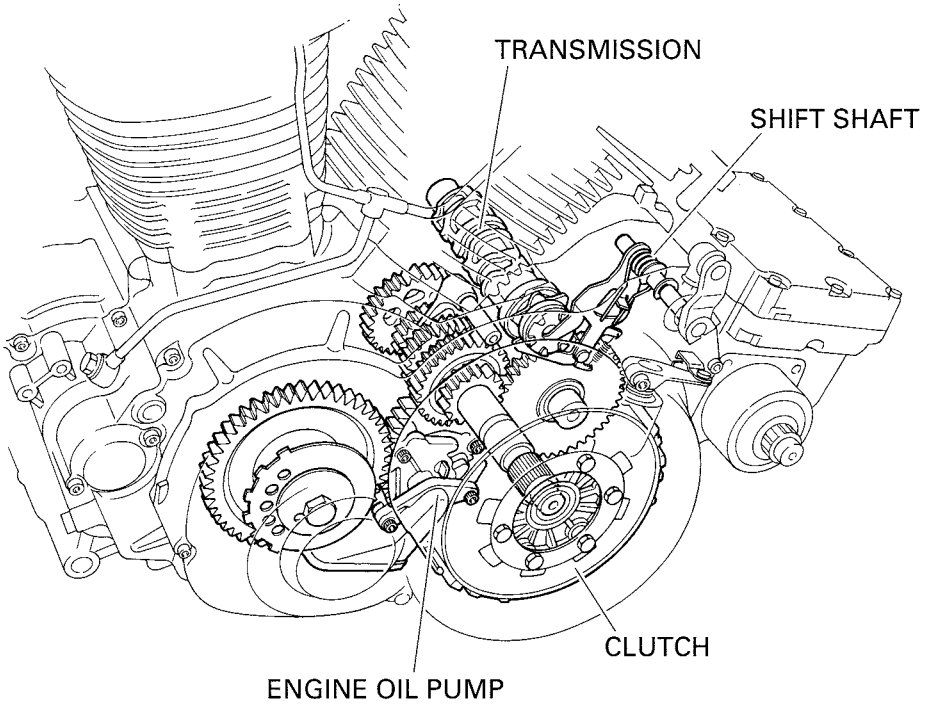

ENGINE 5-1
INSTALLING THE ENGINE 5-8

ROCKER ARMS, PUSH RODS AND VALVE LIFTERS 5-12
REMOVING THE ROCKER ARMS, PUSH RODS AND VALVE LIFTERS 5-18
CHECKING THE ROCKER ARMS AND ROCKER ARM SHAFTS 5-18
CHECKING THE ROCKER ARM BASES 5-20
CHECKING THE PUSH RODS 5-20
CHECKING THE VALVE LIFTERS AND VALVE LIFTER CASES 5-20
BLEEDING THE VALVE LIFTER 5-21
CHECKING THE PUSH ROD COVERS 5-23
INSTALLING THE VALVE LIFTERS AND PUSH ROD COVERS 5-23
INSTALLING THE ROCKER ARMS AND PUSH RODS 5-24
INSTALLING THE CYLINDER HEAD COVERS 5-26
INSTALLING THE CAMSHAFT SPROCKET COVER AND ENGINE LEFT SIDE COVER 5-27

CAMSHAFTS 5-29
REMOVING THE CAMSHAFTS 5-31
CHECKING THE CAMSHAFTS 5-32
CHECKING THE DECOMPRESSION SYSTEM 5-34
CHECKING THE OIL DELIVERY PIPE 5-35
INSTALLING THE CAMSHAFTS 5-35

CYLINDER HEADS 5-39
REMOVING THE CYLINDER HEADS 5-41
CHECKING THE CYLINDER HEADS 5-41
CHECKING THE OIL DELIVERY PIPE 5-42
INSTALLING THE CYLINDER HEADS 5-42

VALVES AND VALVE SPRINGS 5-44
REMOVING THE VALVES 5-45
CHECKING THE VALVES AND VALVE GUIDES 5-46
CHECKING THE VALVE SEATS 5-48
CHECKING THE VALVE SPRINGS 5-50
INSTALLING THE VALVES 5-51

CYLINDERS AND PISTONS 5-53
REMOVING THE CYLINDERS AND PISTONS 5-54
CHECKING THE CYLINDERS AND PISTONS 5-54
CHECKING THE PISTON RINGS 5-56
CHECKING THE PISTON PINS 5-57
INSTALLING THE PISTONS AND CYLINDERS 5-58

CLUTCH 5-60
REMOVING THE CLUTCH 5-65
REMOVING THE PRIMARY DRIVE GEAR 5-65
CHECKING THE FRICTION PLATES 5-66
CHECKING THE CLUTCH PLATES 5-66
CHECKING THE CLUTCH SPRING PLATE 5-67
CHECKING THE CLUTCH HOUSING 5-67
CHECKING THE CLUTCH BOSS 5-67
CHECKING THE PRESSURE PLATE 5-67
CHECKING THE PULL LEVER SHAFT AND PULL ROD 5-68
CHECKING THE PRIMARY DRIVE 5-68
INSTALLING THE PICKUP COIL AND PULL LEVER SHAFT 5-68
INSTALLING THE PRIMARY DRIVE GEAR 5-69
INSTALLING THE CLUTCH 5-70

SHIFT SHAFT 5-74
CHECKING THE SHIFT SHAFT 5-75
CHECKING THE STOPPER LEVER 5-75
INSTALLING THE STOPPER LEVER AND SHIFT SHAFT 5-75

GENERATOR AND STARTER CLUTCH 5-77
REMOVING THE GENERATOR 5-80
CHECKING THE STARTER CLUTCH 5-80
INSTALLING THE GENERATOR 5-81

TRANSFER GEAR CASE 5-85
REMOVING THE BATTERY 5-91
REMOVING THE MIDDLE DRIVEN SHAFT 5-91
CHECKING THE MIDDLE DRIVE 5-91
CHECKING THE OIL STRAINER 5-92
CHECKING THE OIL PUMP 5-92
CHECKING THE OIL PIPE 5-93
ASSEMBLING THE OIL PUMP 5-93
INSTALLING THE TRANSFER GEAR CASE 5-94
INSTALLING THE OIL TANK COVER 5-97
INSTALLING THE BATTERY 5-98

CRANKCASE 5-100
DISASSEMBLING THE CRANKCASE 5-103
CHECKING THE CRANKCASE 5-104
CHECKING THE BEARINGS AND OIL SEAL 5-104
CHECKING THE OIL DELIVERY PIPE 5-105
CHECKING THE ENGINE OIL PUMP DRIVE 5-105
ASSEMBLING THE CRANKCASE 5-105

ENGINE OIL PUMP 5-108
CHECKING THE OIL PUMP 5-111
CHECKING THE RELIEF VALVE 5-111
CHECKING THE OIL STRAINER 5-112
ASSEMBLING THE OIL PUMP 5-112
INSTALLING THE OIL PUMP 5-113
INSTALLING THE OIL STRAINER 5-113

CRANKSHAFT AND CONNECTING RODS 5-114
REMOVING THE CRANKSHAFT 5-115
REMOVING THE CONNECTING RODS 5-115
CHECKING THE CRANKSHAFT AND CONNECTING RODS 5-115
INSTALLING THE CONNECTING RODS 5-119
INSTALLING THE CRANKSHAFT 5-121

TRANSMISSION 5-122
CHECKING THE SHIFT FORKS 5-125
CHECKING THE SHIFT DRUM ASSEMBLY 5-125
CHECKING THE TRANSMISSION 5-126
INSTALLING THE TRANSMISSION, SHIFT DRUM ASSEMBLY AND SHIFT FORKS 5-126

EAS00188

ENGINE

ENGINE

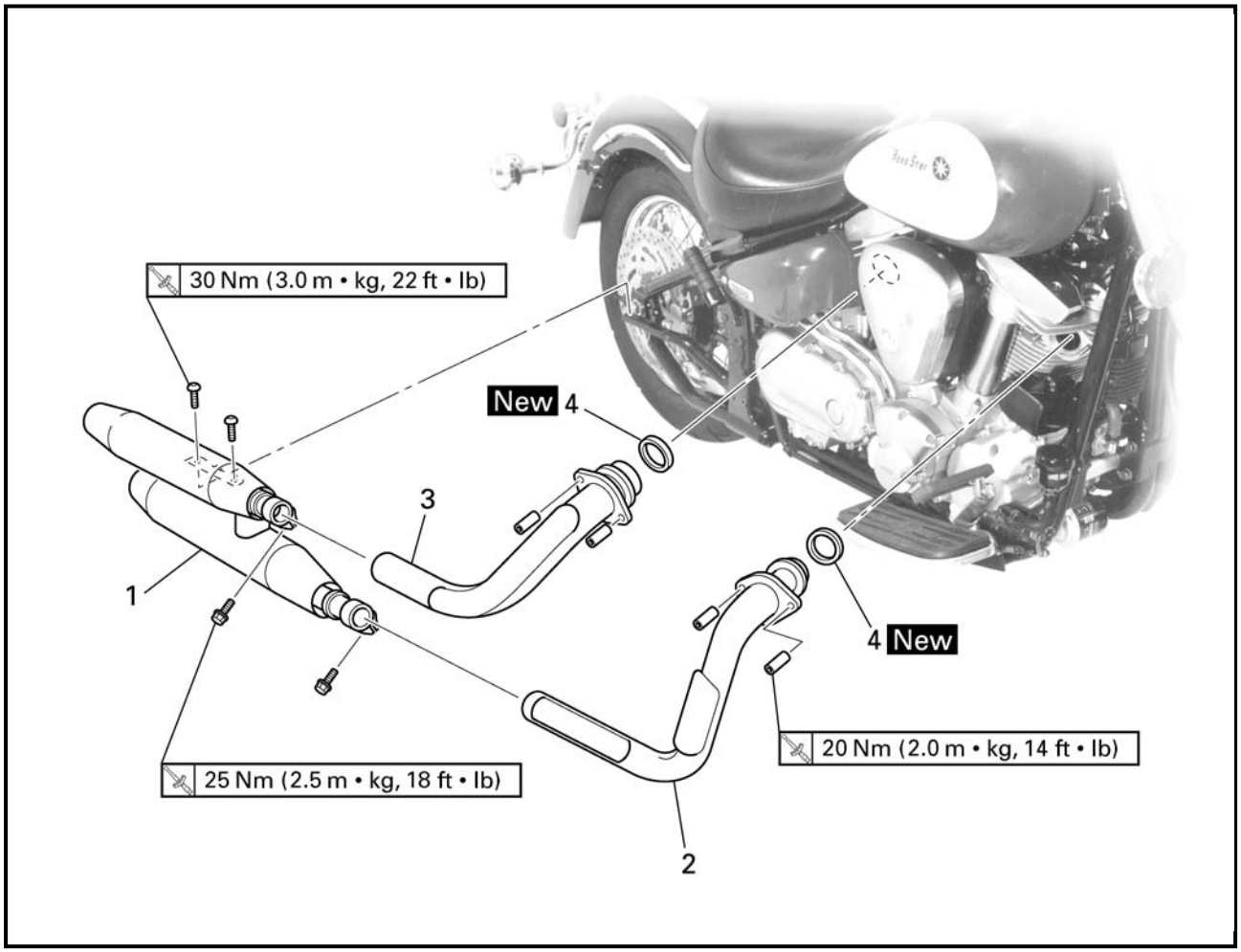

Order	Job/Part	Q'ty	Remarks
	Removing the muffler and exhaust pipes		Remove the parts in the order listed.
1	Muffler	1	
2	Front exhaust pipe	1	
3	Rear exhaust pipe	1	
4	Gasket	2	
			For installation, reverse the removal procedure.

5

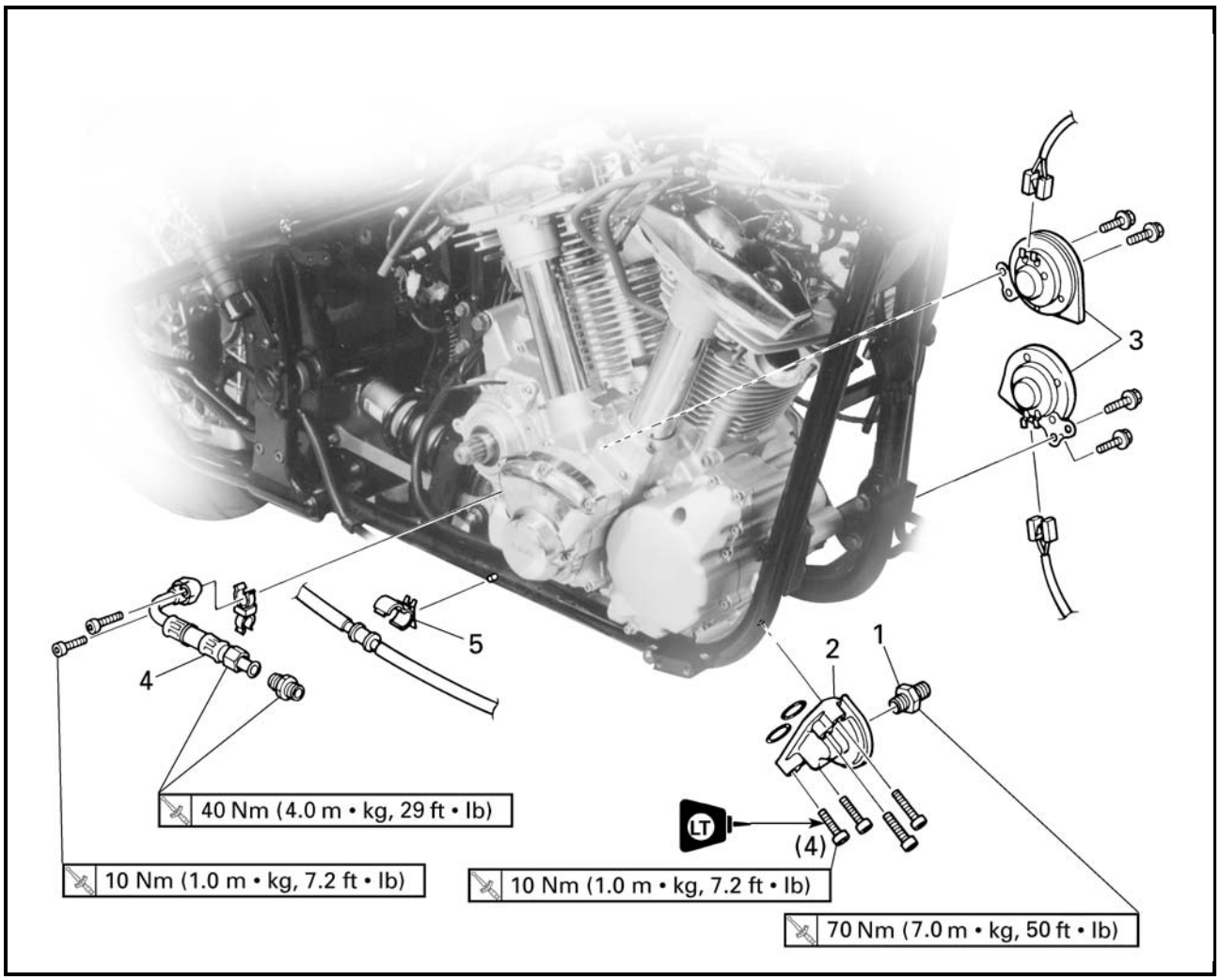

Order	Job/Part	Q'ty	Remarks
	Removing the oil filter bracket and horns		
	Rider seat/side covers		Refer to "SEATS AND SIDE COVERS" in chapter 3.
	Fuel tank		Refer to "FUEL TANK" in chapter 3.
	Air filter case		Refer to "AIR FILTER CASE" in chapter 3.
	Carburetor/carburetor joint		Refer to "CARBURETOR" in chapter 6.
	Air induction system parts		Refer to "AIR INDUCTION SYSTEM" in chapter 6.
	Starter motor		Refer to "STARTER MOTOR" in chapter 7.

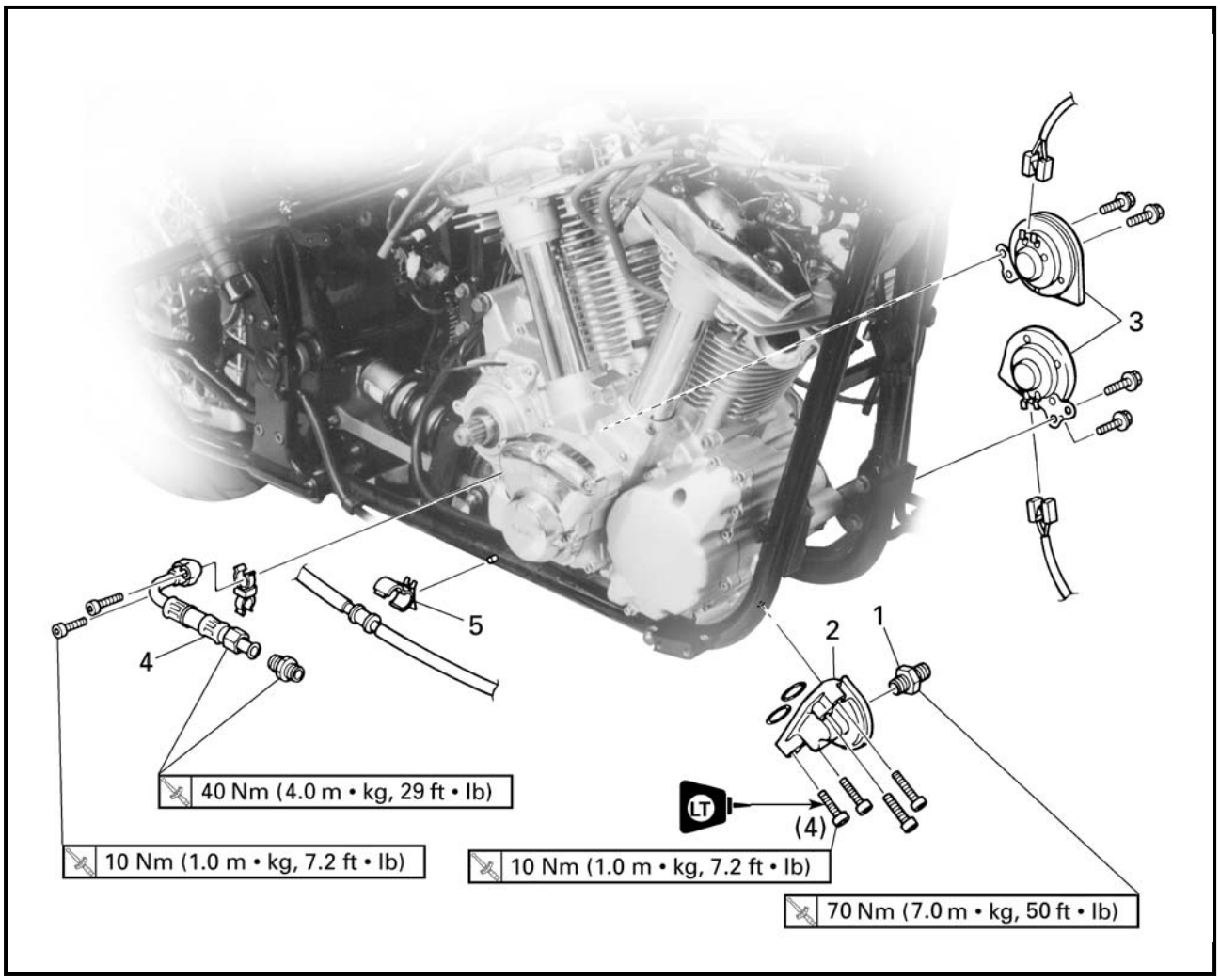

Order	Job/Part	Q'ty	Remarks
	Engine oil/oil filter cartridge		Drain.
	Transfer gear oil		Drain.
	Transfer gear case		Refer to "TRANSFER GEAR CASE".
	Rider footrest (left)		Refer to "ROCKER ARMS, PUSH RODS AND VALVE LIFTERS".
	Rider footrest (right)		Refer to "GENERATOR AND STARTER CLUTCH".
1	Oil filter bolt	1	
2	Oil filter bracket	1	
3	Horn	2	
4	Oil delivery pipe	1	
5	Brake hose holder	1	
			For installation, reverse the removal procedure.

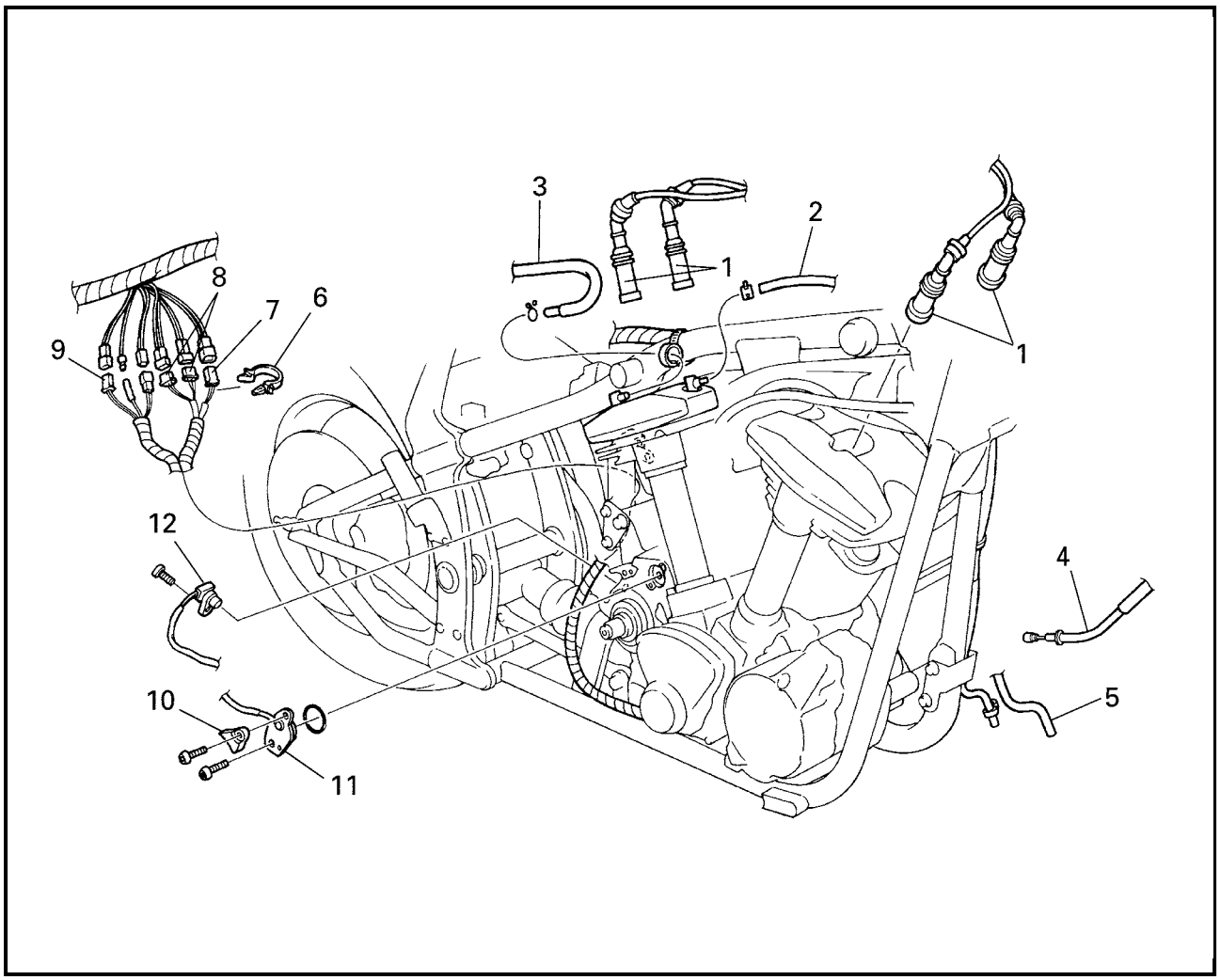

Order	Job/Part	Q'ty	Remarks
	Disconnecting the leads and hoses		Disconnect the parts in the order listed.
1	Spark plug caps	4	
2	Cylinder head breather hose	1	
3	Oil tank breather hose	1	
4	Clutch cable	1	
5	Charcoal canister hose (carburetor to charcoal canister)	1	
6	Plastic clamp	1	
7	Stator coil coupler	1	
8	Decompression solenoid coupler	2	
9	Pickup coil coupler	1	

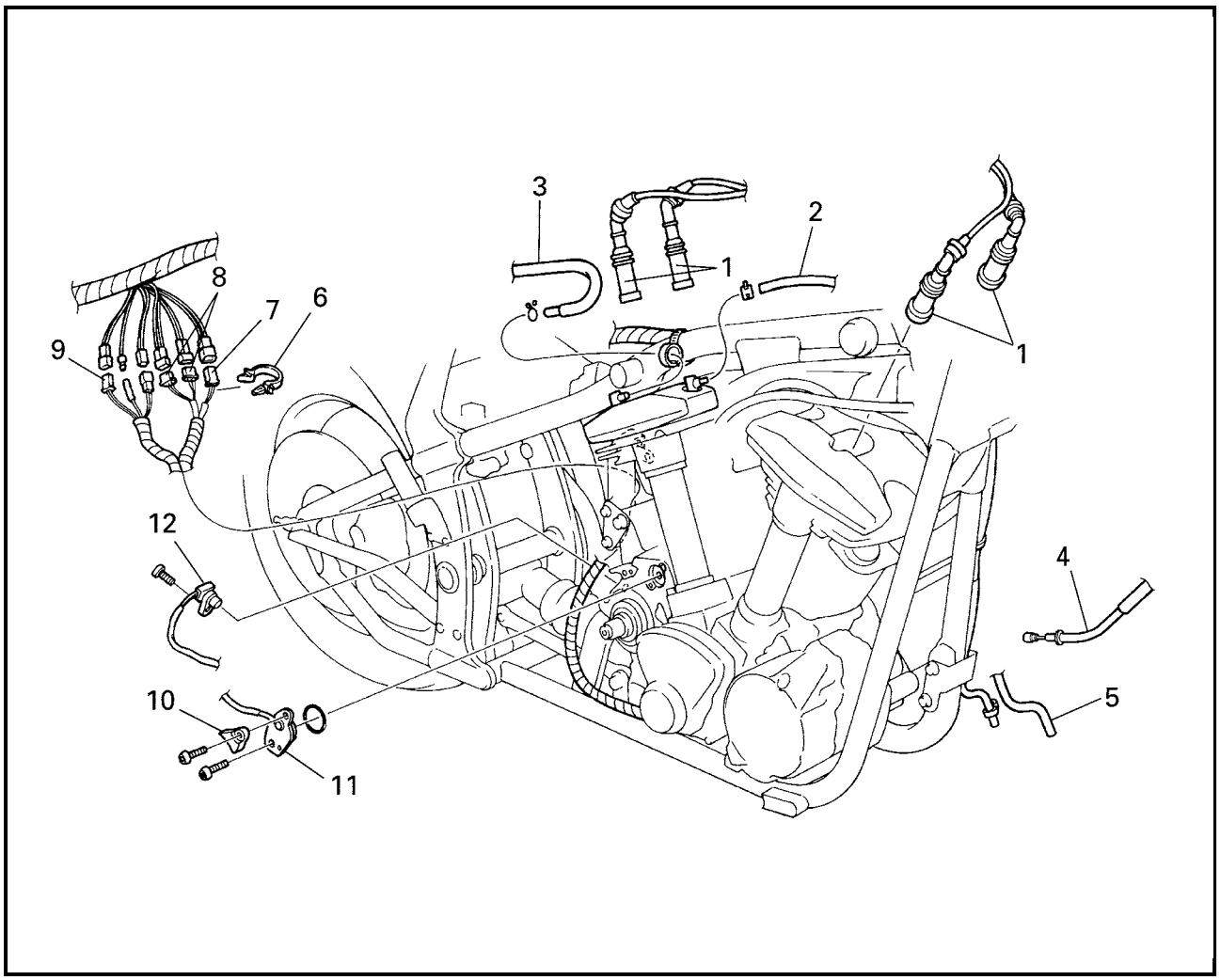

Order	Job/Part	Q'ty	Remarks
10	Neutral switch cover	1	
11	Neutral switch	1	
12	Speed sensor	1	
			For connecting, reverse the disconnection procedure.

EAS00191
ENGINE

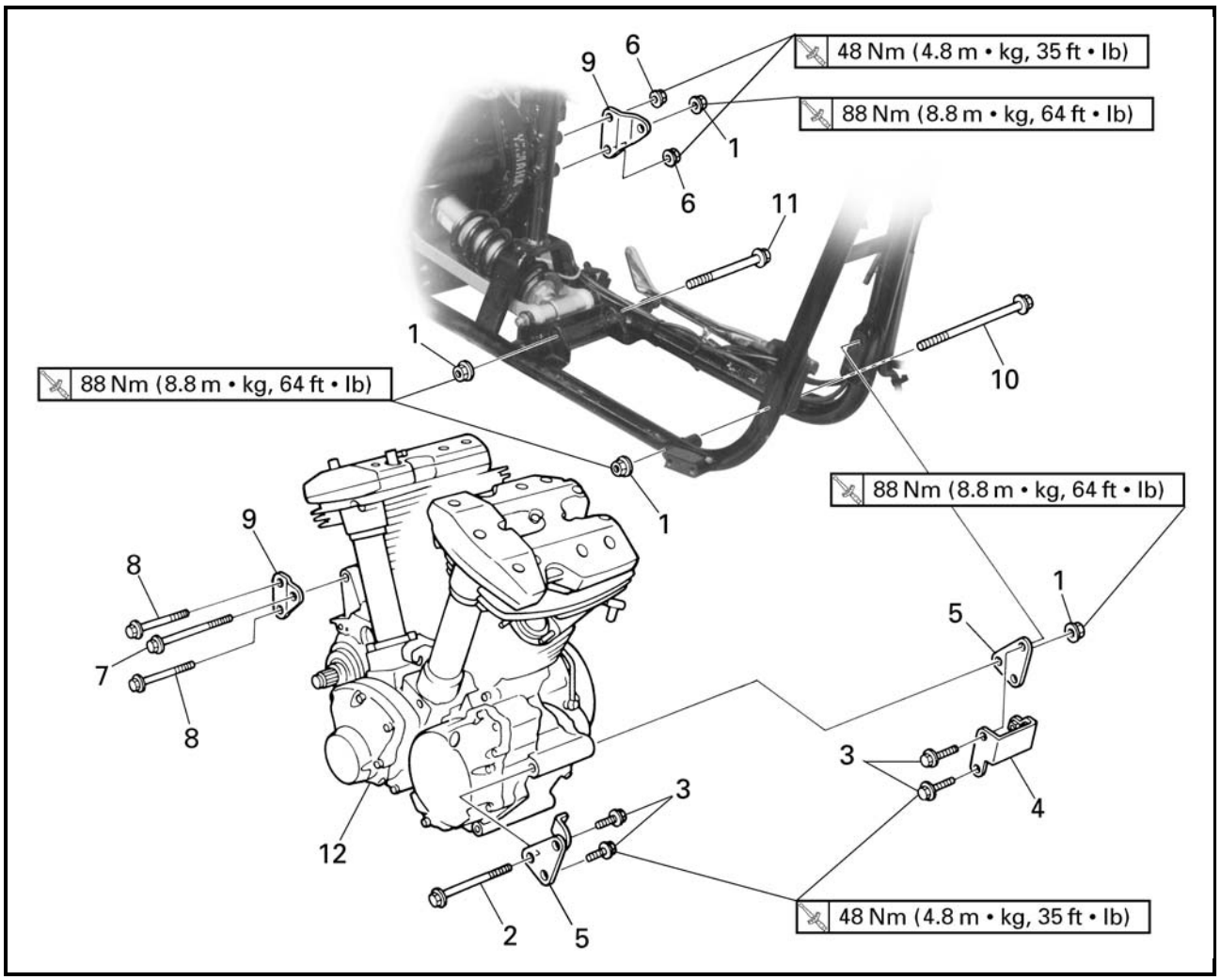

Order	Job/Part	Q'ty	Remarks
	Removing the engine		Remove the parts in the order listed. **NOTE:** Place a suitable stand under the frame and engine.
1	Self-locking nut	4	
2	Upper front mounting bolt	1	
3	Front engine bracket bolt	4	
4	Horn bracket	1	
5	Front engine bracket	2	
6	Self-locking nut	2	
7	Upper rear mounting bolt	1	
8	Rear engine bracket bolt	2	

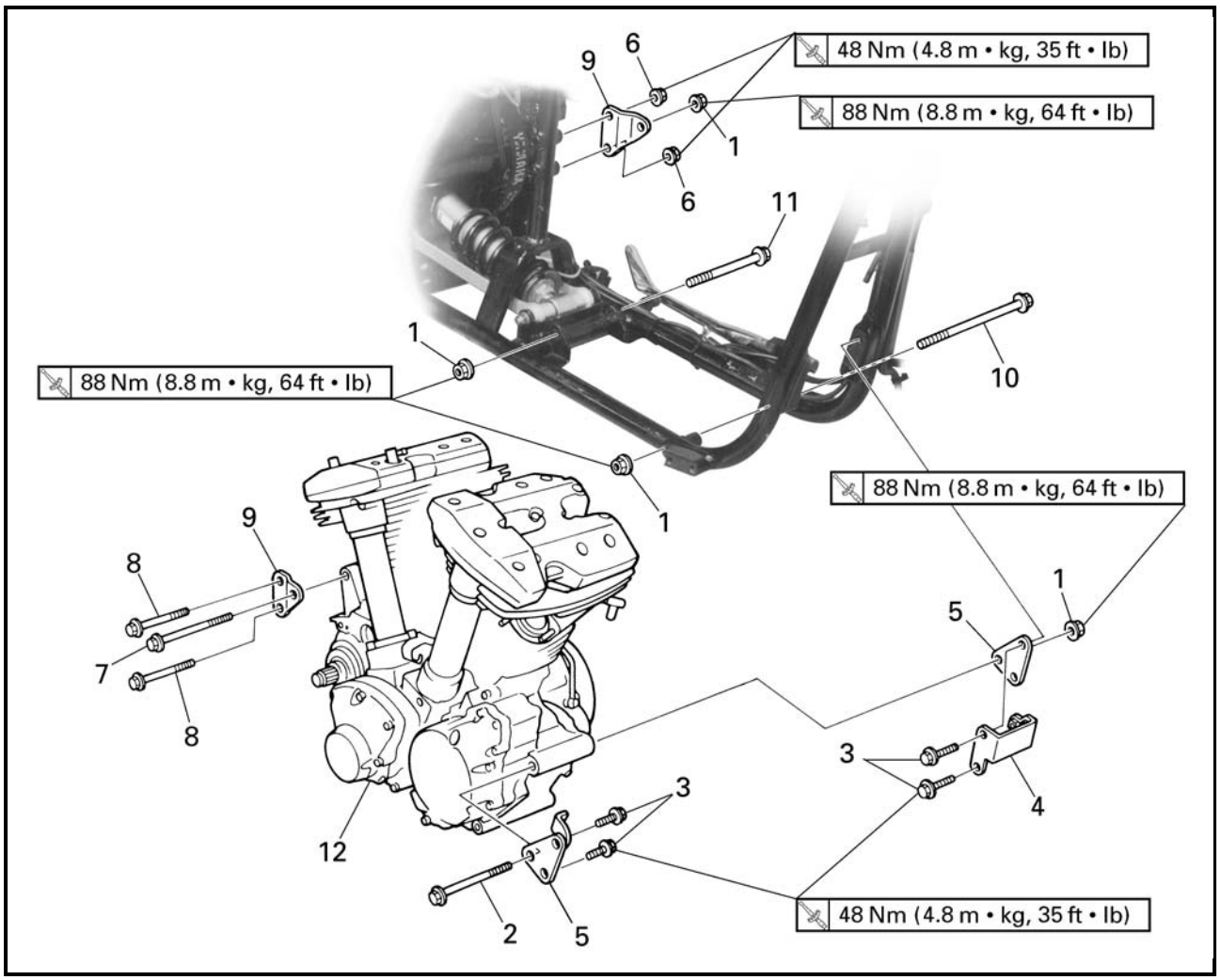

Order	Job/Part	Q'ty	Remarks
9	Rear engine bracket	2	
10	Lower front mounting bolt	1	
11	Lower rear mounting bolt	1	
12	Engine	1	Refer to "INSTALLING THE ENGINE". For installation, reverse the removal procedure.

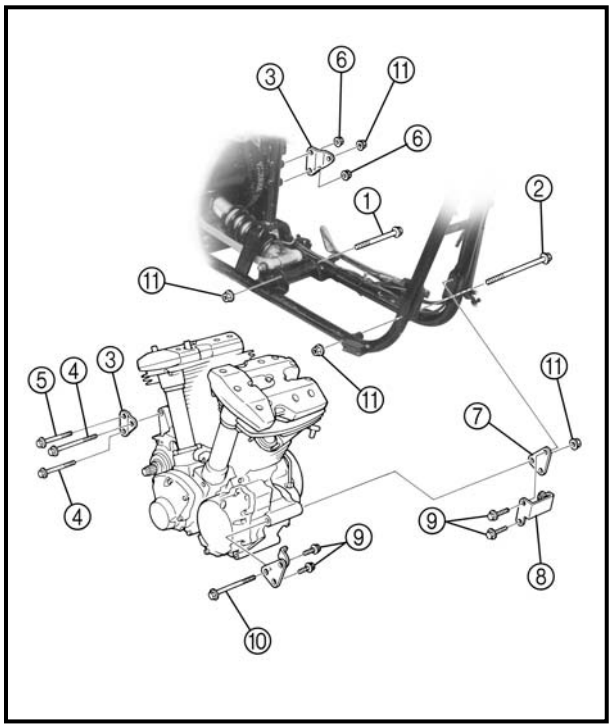

INSTALLING THE ENGINE

1. Install:
   - lower rear mounting bolt ①
   - lower front mounting bolt ②
   - rear engine brackets ③
   - rear engine bracket bolts ④
   - upper rear mounting bolt ⑤
   - self-locking nuts ⑥
   - front engine brackets ⑦
   - horn bracket ⑧
   - front engine bracket bolts ⑨
   - upper front mounting bolt ⑩
   - self-locking nuts ⑪

NOTE:

Do not fully tighten the bolts and nuts.

2. Tighten:
   - front engine bracket bolts ⑨

     48 Nm (4.8 m · kg, 35 ft · lb)
   - self-locking nut ⑥

     48 Nm (4.8 m · kg, 35 ft · lb)
   - self-locking nuts ⑪

     88 Nm (8.8 m · kg, 64 ft · lb)

5

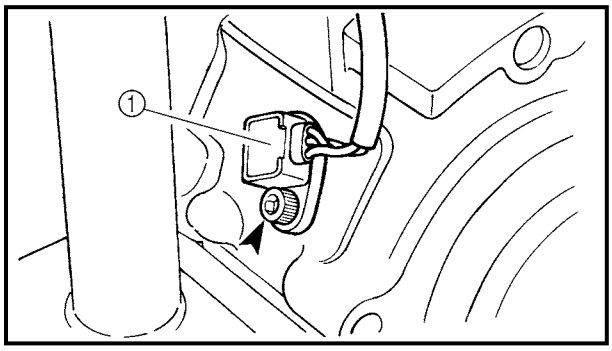

3. Install:
   - speed sensor ①

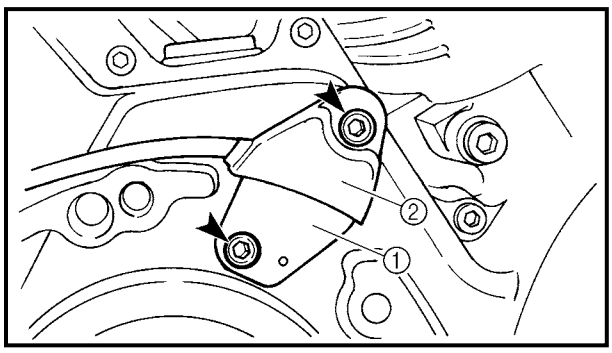

4. Install:
   - neutral switch ①
   - neutral switch cover ②

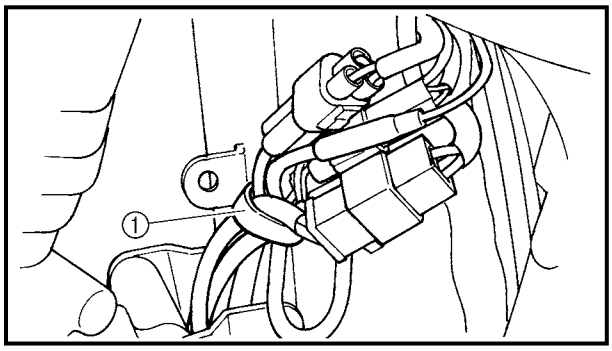

5. Connect:
   - speed sensor coupler
   - neutral switch connector
   - pickup coil coupler
   - decompression solenoid coupler
   - stator coil coupler
6. Install:
   - plastic clamp ①

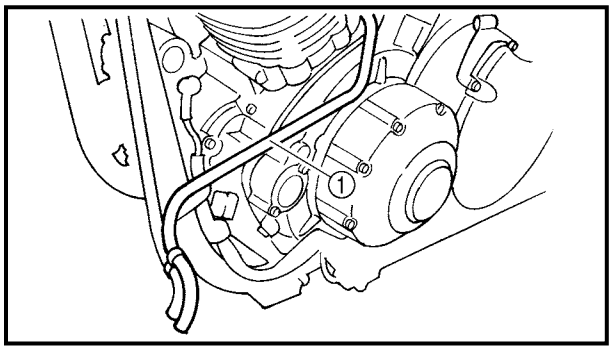

7. Connect:
   - charcoal canister hose (carburetor to charcoal canister) ①

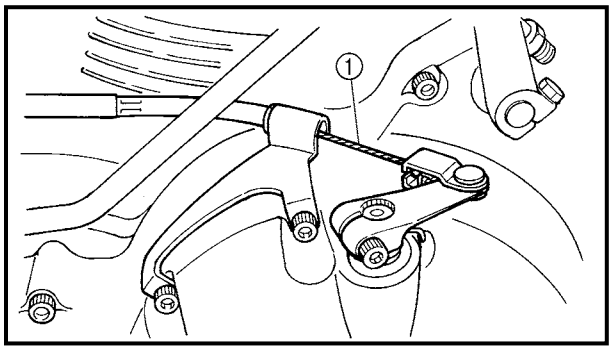

8. Connect:
   - clutch cable ①

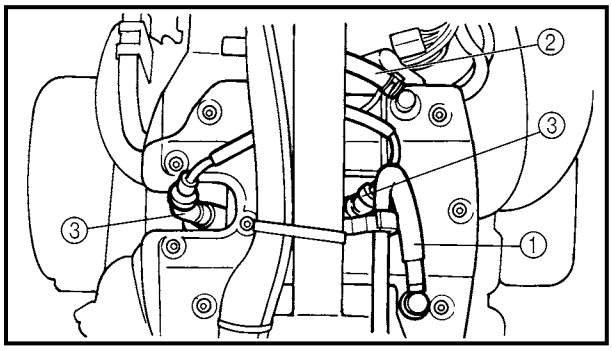

9. Connect:
   - oil tank breather hose ①
   - cylinder head breather hose ②
   - spark plug caps ③

NOTE:
Refer to "CABLE ROUTING" in chapter 2.

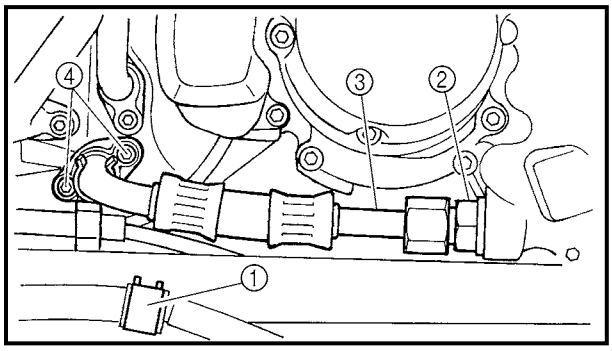

10. Install:
   - brake hose holder ①
   - joint bolt ② **40 Nm (4.0 m · kg, 29 ft · lb)**
   - oil delivery pipe ③ **40 Nm (4.0 m · kg, 29 ft · lb)**
   - bolts ④ **10 Nm (1.0 m · kg, 7.2 ft · lb)**

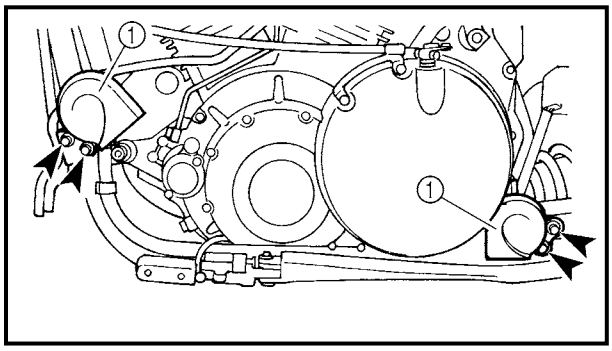

11.Install:
- horns ①

12.Connect:
- horn couplers

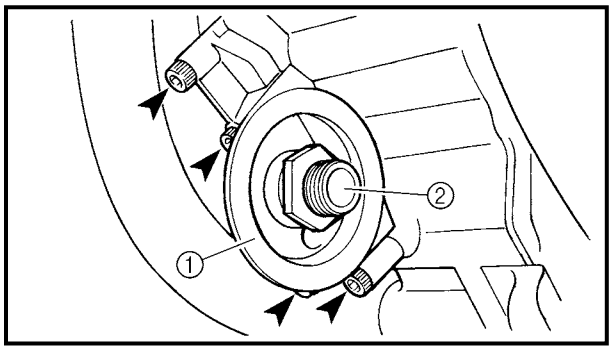

13.Install:
- oil filter bracket ①

	10 Nm (1.0 m · kg, 7.2 ft · lb)

- oil filter bolt ②

	70 Nm (7.0 m · kg, 50 ft · lb)

NOTE:
Apply locking agent (LOCTITE®) to the threads of the oil filter bracket bolts.

14.Install:
- rider footrest (right)
  Refer to "GENERATOR AND STARTER CLUTCH".
- rider footrest (left)
  Refer to "ROCKER ARMS, PUSH RODS AND VALVE LIFTERS".
- transfer gear case
  Refer to "TRANSFER GEAR CASE".

15.Fill:
- transfer gear case
  (with the specified amount of the recommended transfer gear oil)
  Refer to "CHANGING THE TRANSFER GEAR OIL" in chapter 3.

16.Install:
- oil filter cartridge

17.Fill:
- oil tank
  (with the specified amount of the recommended engine oil)
  Refer to "CHANGING THE ENGINE OIL" in chapter 3.

18.Install:
- starter motor
  Refer to “STARTER MOTOR” in chapter 7.
- air induction system parts
  Refer to “AIR INDUCTION SYSTEM” in chapter 6.
- carburetor joint
- carburetor
  Refer to “CARBURETOR” in chapter 6.
- air filter case
  Refer to “AIR FILTER CASE” in chapter 3.
- fuel tank
  Refer to “FUEL TANK” in chapter 3.
- side covers
- rider seat
  Refer to “SEATS AND SIDE COVERS” in chapter 3.

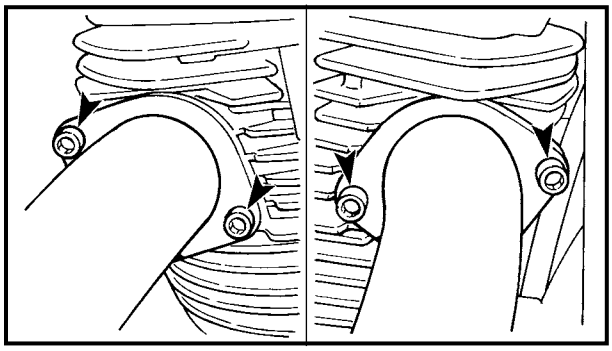

19.Install:
- gaskets
- exhaust pipes

NOTE:
Finger tighten the exhaust pipe nuts.

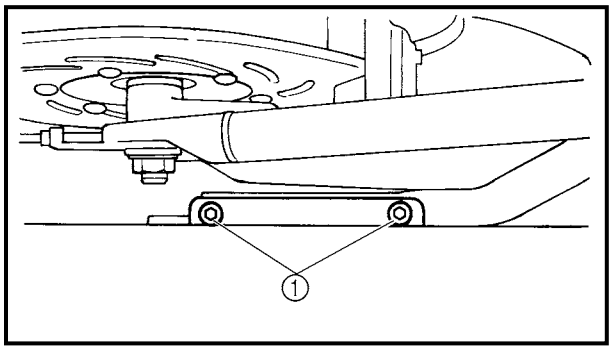

20.Install:
- muffler
- bolts ① **30 Nm (3.0 m · kg, 22 ft · lb)**

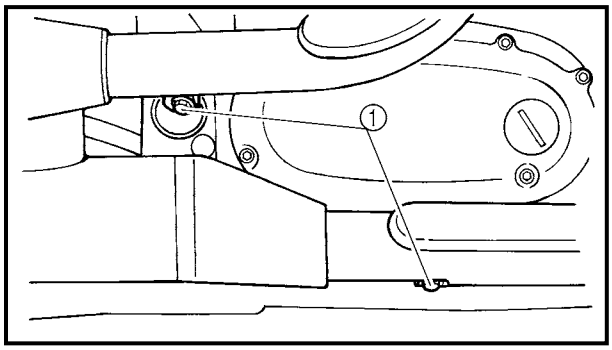

21.Tighten:
- exhaust pipe nuts **20 Nm (2.0 m · kg, 14 ft · lb)**
- clamp bolts ① **25 Nm (2.5 m · kg, 18 ft · lb)**

ROCKER ARMS, PUSH RODS AND VALVE LIFTERS

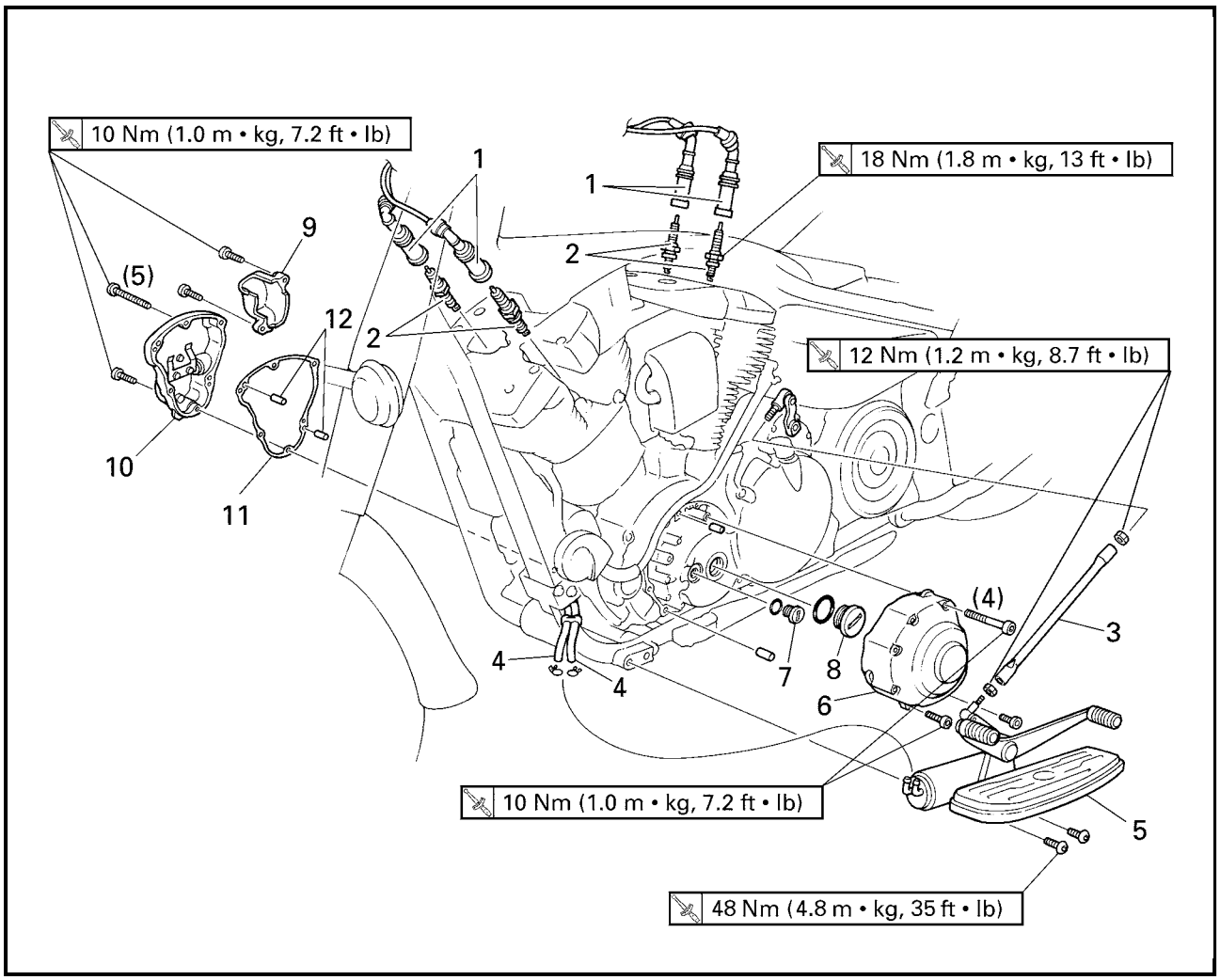

Order	Job/Part	Q'ty	Remarks
	Removing the engine left side cover and camshaft sprocket cover		Remove the parts in the order listed.
	Rider seat/fuel tank/air filter case		Refer to "SEATS AND SIDE COVER", "FUEL TANK" and "AIR FILTER CASE" in chapter 3.
	Engine oil		Drain.
1	Spark plug cap	4	Disconnect.
2	Spark plug	4	
3	Shift rod	1	
4	Charcoal canister hose	2	Disconnect.
5	Rider footrest (left)	1	
6	Engine left side cover	1	
7	Timing mark accessing screw	1	
8	Crankshaft end cover	1	

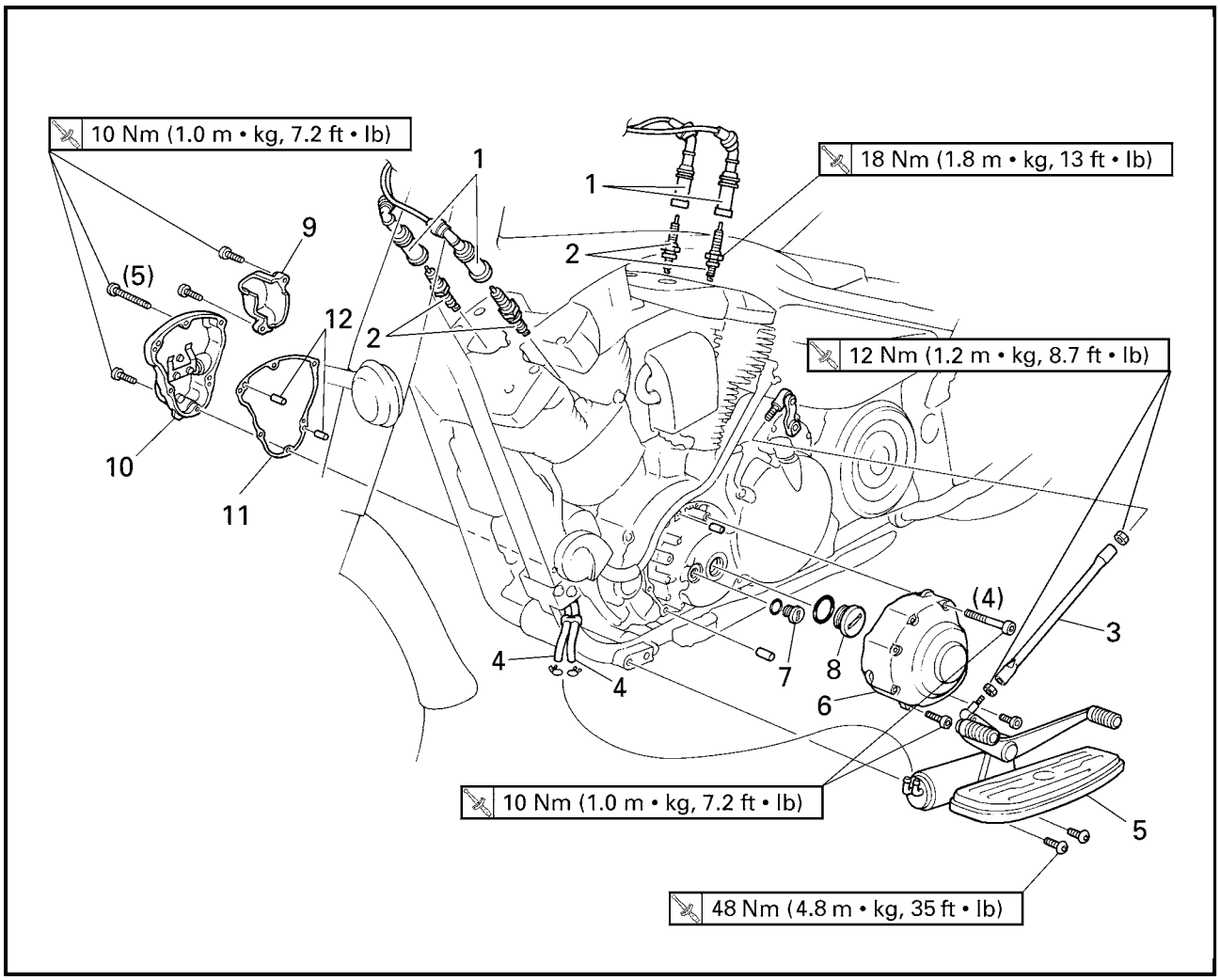

Order	Job/Part	Q'ty	Remarks
9	Decompression solenoid cover	1	
10	Camshaft sprocket cover	1	
11	Camshaft sprocket cover gasket	1	
12	Dowel pin	2	
			For installation, reverse the removal procedure.

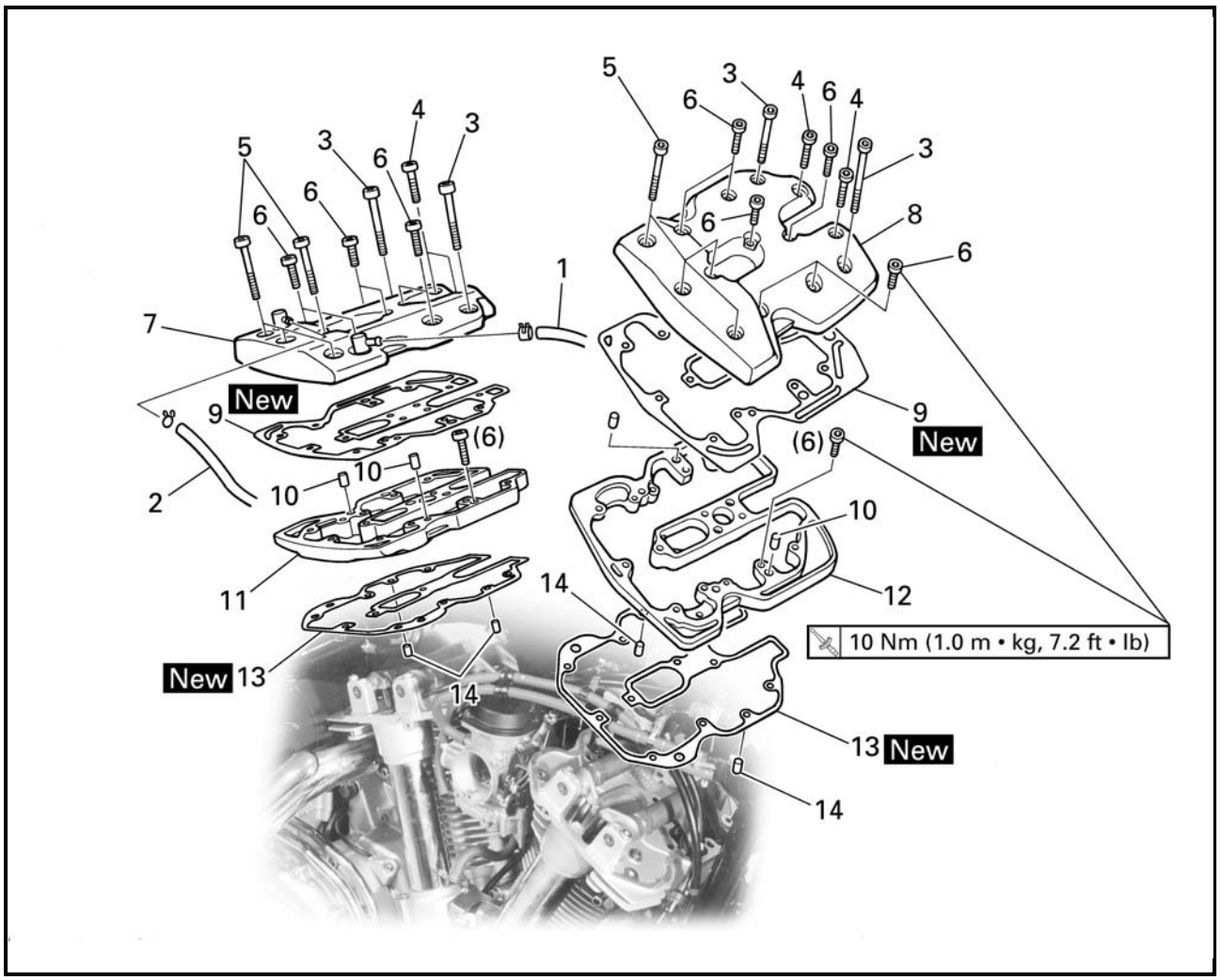

Order	Job/Part	Q'ty	Remarks
	Removing cylinder head covers		Remove the parts in the order listed.
1	Cylinder head breather hose	1	
2	Oil tank breather hose	1	
3	Bolt	4	ℓ = 65 mm (2.56 in)
4	Bolt	4	ℓ = 35 mm (1.38 in)
5	Bolt	4	ℓ = 50 mm (1.97 in)
6	Bolt	12	ℓ = 25 mm (0.98 in)
7	Rear cylinder head cover	1	
8	Front cylinder head cover	1	
9	Cylinder head cover gasket	2	
10	Dowel pin	4	

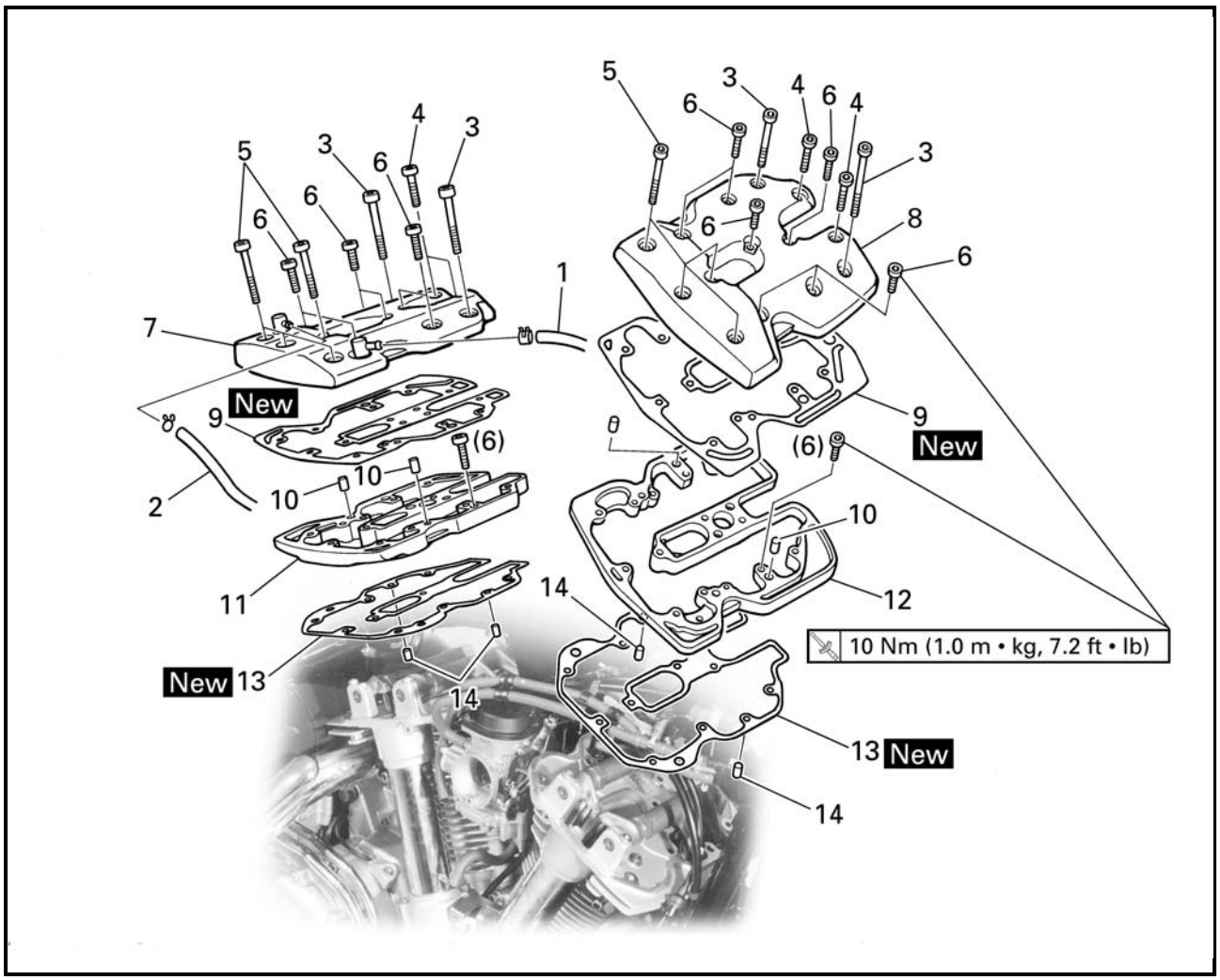

Order	Job/Part	Q'ty	Remarks
11	Rear cylinder head cover spacer	1	
12	Front cylinder head cover spacer	1	
13	Cylinder head cover spacer gasket	2	
14	Dowel pin	4	
			For installation, reverse the removal procedure.

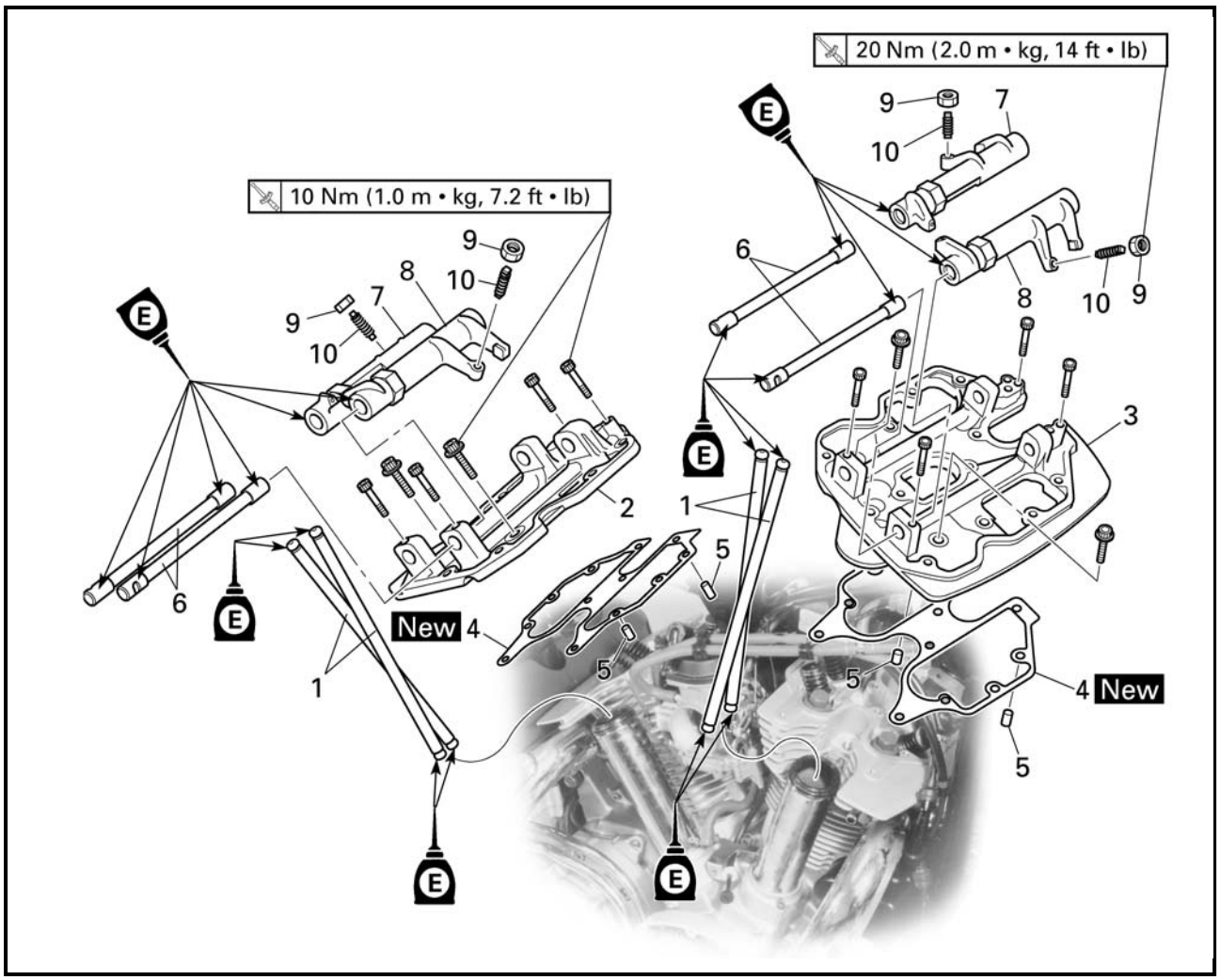

Order	Job/Part	Q'ty	Remarks
	Removing the push rods and rocker arms		Remove the parts in the order listed.
1	Push rod	4	
2	Rear rocker arm base	1	
3	Front rocker arm base	1	
4	Rocker arm base gasket	2	
5	Dowel pin	4	
6	Rocker arm shaft	4	
7	Rocker arm 1	2	
8	Rocker arm 2	2	
9	Locknut	2	
10	Adjusting screw	2	
			For installation, reverse the removal procedure.

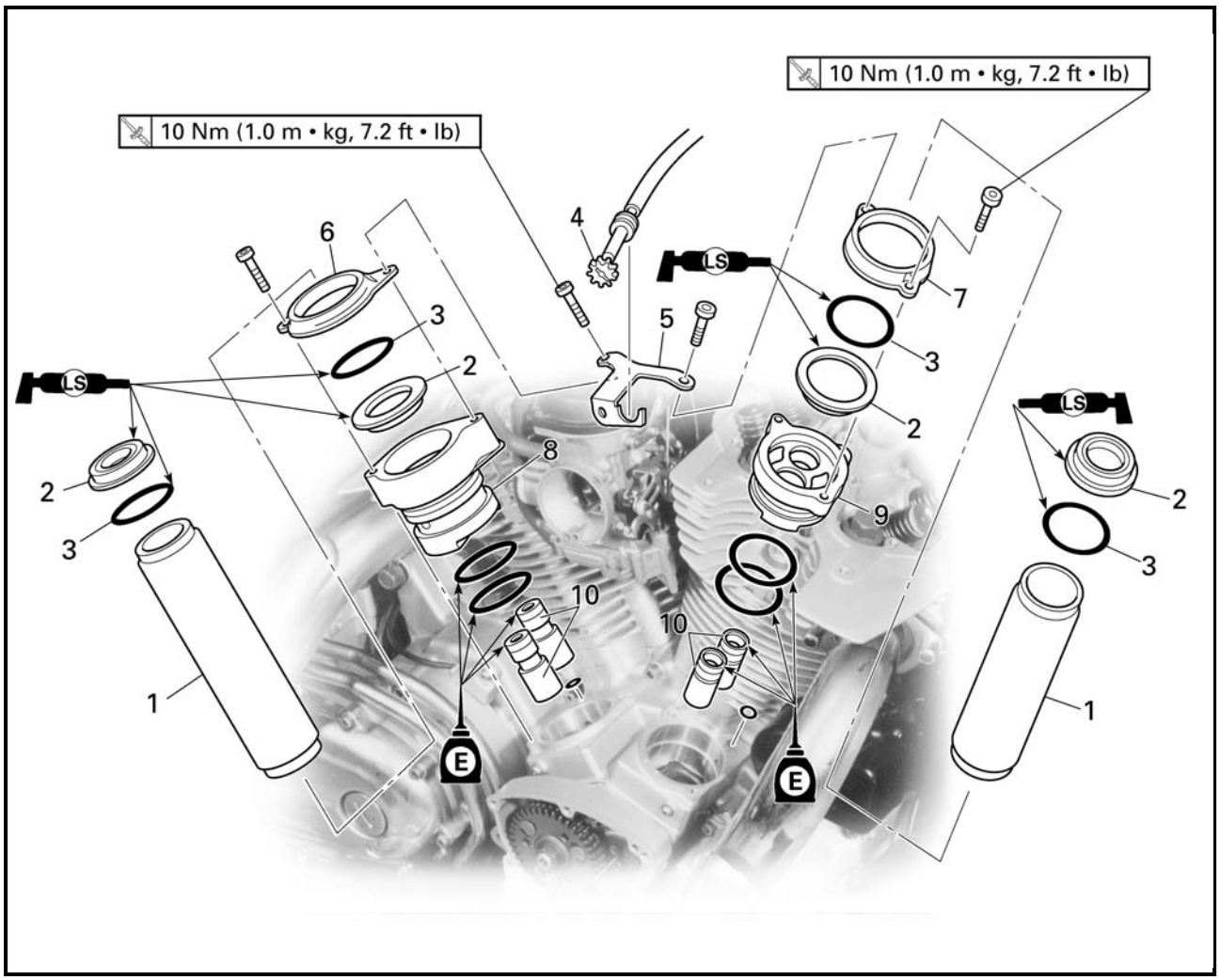

Order	Job/Part	Q'ty	Remarks
	Removing the valve lifters		Remove the parts in the order listed.
1	Push rod cover	2	
2	Oil seal	4	
3	O-ring	4	
4	Throttle stop screw	1	Unhook.
5	Throttle stop screw holder	1	
6	Rear valve lifter case cover	1	
7	Front valve lifter case cover	1	
8	Rear valve lifter case	1	
9	Front valve lifter case	1	
10	Valve lifter	4	
			For installation, reverse the removal procedure.

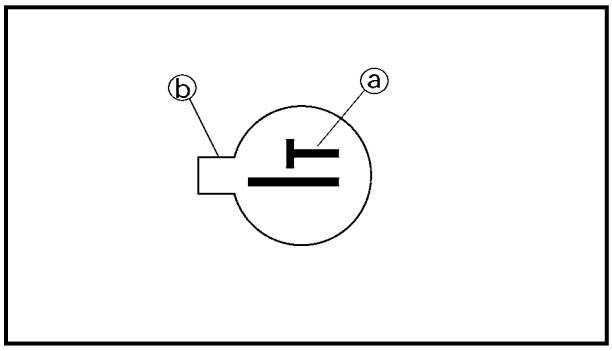

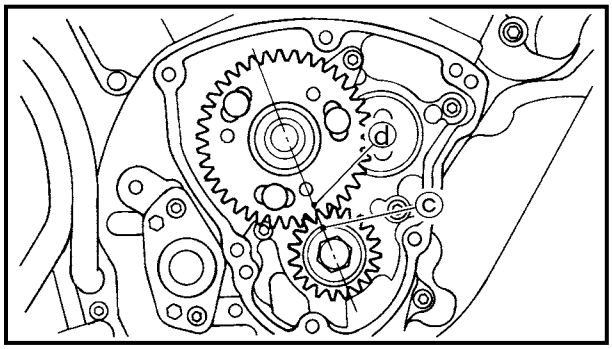

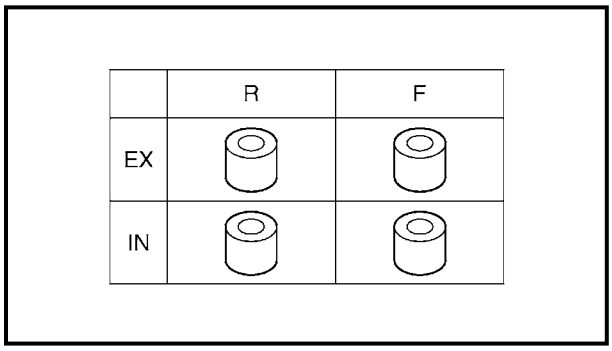

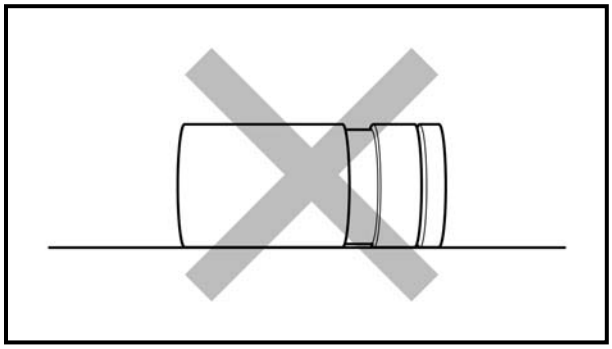

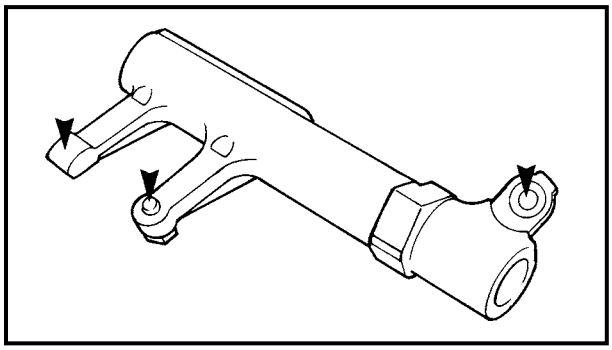

REMOVING THE ROCKER ARMS, PUSH RODS AND VALVE LIFTERS

1. Align:
   - TDC mark ⓐ on the pickup coil rotor (with the pointer ⓑ on the clutch/pickup coil rotor cover)

▼▼▼▼▼▼▼▼▼▼▼▼▼▼▼▼▼▼▼▼▼▼▼▼▼▼▼▼▼▼▼▼

a. Turn the crankshaft clockwise.

b. When piston #1 is at TDC on the compression stroke, align the TDC mark ⓐ on the pickup coil rotor with the pointer ⓑ on the clutch/pickup coil rotor cover.

c. Check the camshaft drive gear mark ⓒ position and camshaft driven gear mark ⓓ position as shown.
   If the marks are not aligned, turn the crankshaft counterclockwise 360 degrees and recheck step b.

▲▲▲▲▲▲▲▲▲▲▲▲▲▲▲▲▲▲▲▲▲▲▲▲▲▲▲▲▲▲▲▲

2. Remove:
   - rocker arm bases (with the rocker arms)
3. Remove:
   - valve lifters

NOTE:

Make a note of the position of each valve lifter so that they can be installed in the correct place.

CAUTION:

Do not lay the removed valve lifter on its side.

CHECKING THE ROCKER ARMS AND ROCKER ARM SHAFTS

The following procedure applies to all of the rocker arms and rocker arm shafts.

1. Check:
   - rocker arm
     Damage/wear → Replace.

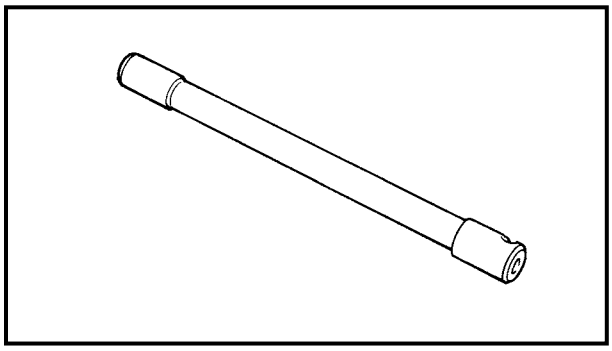

2. Check:
   - rocker arm shaft
     Blue discoloration/excessive wear/pitting/scratches → Replace or check the lubrication system.

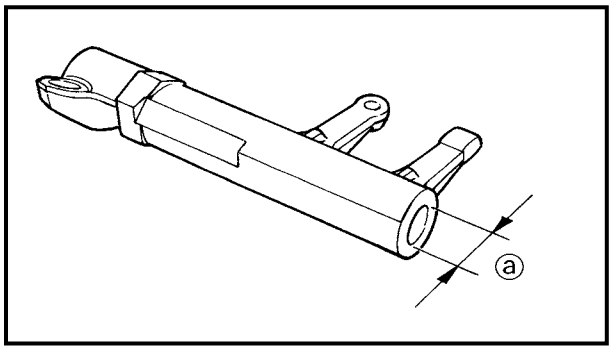

3. Measure:
   - rocker arm inside diameter ⓐ
     Out of specification → Replace.

Rocker arm inside diameter
15.000 ~ 15.018 mm
(0.5906 ~ 0.5913 in)

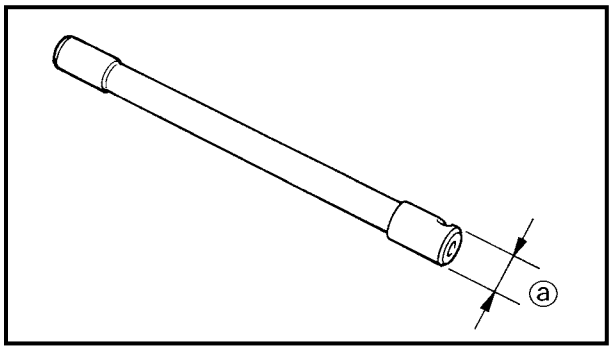

4. Measure:
   - rocker arm shaft outside diameter
     Out of specification → Replace.

Rocker arm shaft outside diameter
14.981 ~ 14.991 mm
(0.5898 ~ 0.5902 in)

5. Calculate:
   - rocker arm to rocker arm shaft clearance

NOTE:
Calculate the clearance by subtracting the rocker arm shaft outside diameter from the rocker arm inside diameter.

Above 0.08 mm (0.003 in) → Replace the defective part(s).

Rocker arm to rocker arm shaft clearance
0.009 ~ 0.037 mm
(0.0003 ~ 0.0015 in)

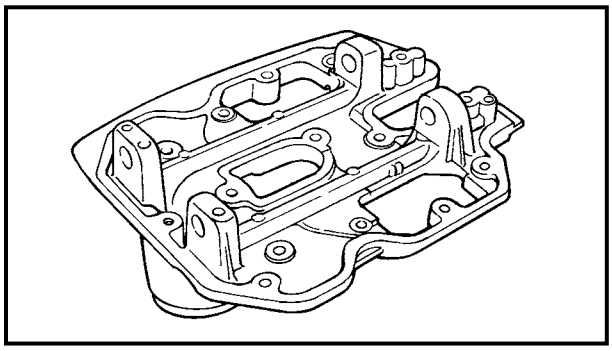

CHECKING THE ROCKER ARM BASES

1. Check:
   - rocker arm base
     Cracks/damage → Replace.

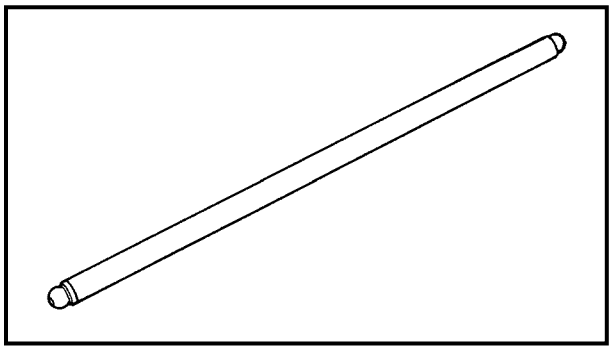

CHECKING THE PUSH RODS

1. Check:
   - push rod
   - push rod end
     Bends/damage → Replace.

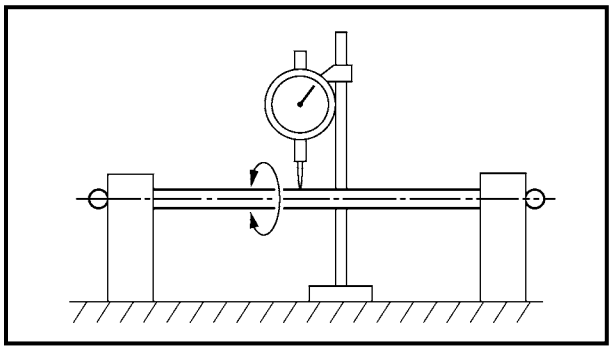

2. Measure:
   - push rod runout
     Out of specification → Replace.

	Push rod runout **0.3 mm (0.012 in)**

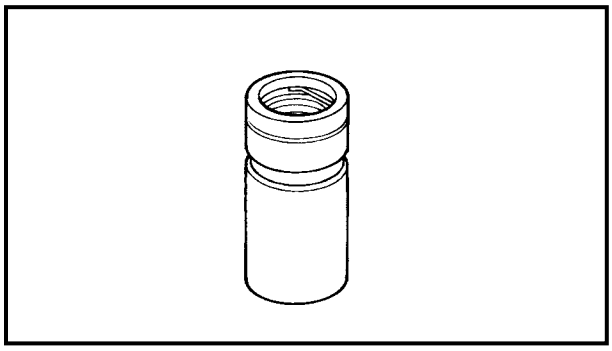

CHECKING THE VALVE LIFTERS AND VALVE LIFTER CASES

1. Check:
   - valve lifter
     Blue discoloration/excessive wear/pitting/scratches → Replace or check the lubrication system.

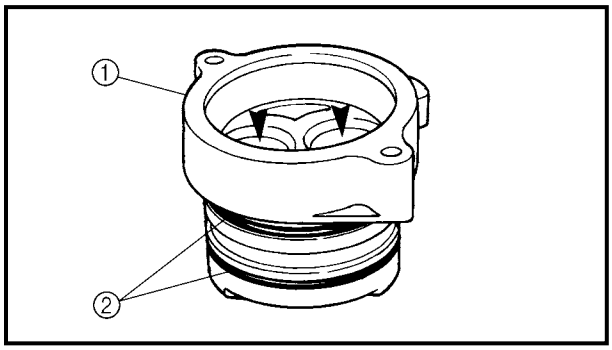

2. Check:
   - valve lifter case ①
     Damage/wear → Replace the valve lifter case.
   - O-ring ②
     Damage/wear → Replace the O-ring.

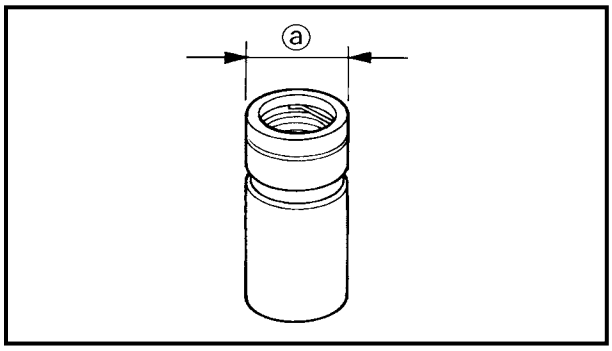

3. Measure:
   - valve lifter outside diameter ⓐ
     Out of specification → Replace.

Valve lifter case outside diameter
22.9680 ~ 22.9744 mm
(0.9043 ~ 0.9045 in)

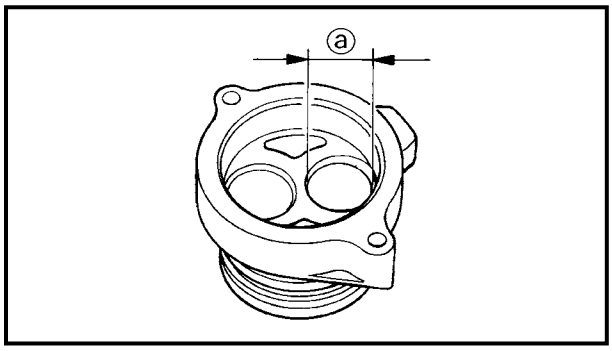

4. Measure:
   - valve lifter case inside diameter ⓐ
     Out of specification → Replace.

Valve lifter case inside diameter
22.990 ~ 23.010 mm
(0.9051 ~ 0.9059 in)

5. Calculate:
   - valve lifter-to-valve lifter case clearance

NOTE:
Calculate the clearance by subtracting the valve lifter case outside diameter.

Above 0.072 mm (0.0028 in) → Replace the defective part(s)

Valve lifter-to-valve lifter case clearance
0.0156 ~ 0.042 mm
(0.0006 ~ 0.0017 in)

BLEEDING A VALVE LIFTER

A valve lifter must be bled in the following cases.
- When installing a new valve lifter
- When the valve lifter leaks oil

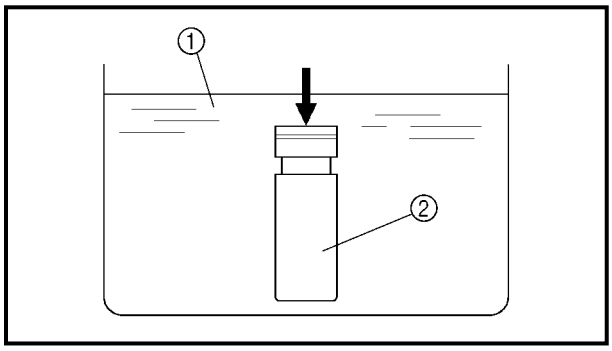

1. Bleed:
   - valve lifter

a. Fill a container with kerosene and place the valve lifter into the container as shown.
   Pump the plunger side of the valve lifter with a press a number of times to let in kerosene.

CAUTION:

- **Do not pump the valve lifter excessively.**
- **Kerosene is highly flammable.**

① Kerosene
② Valve lifter

b. Install the valve lifter into the engine.

CAUTION:

Be sure to install the valve lifter in its appropriate position.

c. Start the engine and warm it up.

d. Stop the engine.

e. Remove the camshaft sprocket cover.

f. Rotate the camshaft until the punch mark ① on the camshaft driven gear aligns with the punch mark on the camshaft drive gear as shown. This is the condition in which piston #1 is at top dead center (TDC).

NOTE:

The crankshaft can be rotated smoothly when the spark plugs are removed.

⚠ WARNING

Be careful since the engine is hot.

g. With piston #1 at TDC, count the indicated number of gear teeth and place marks ② through ⑤ on the camshaft driven gear as shown. When these marks align between the centers of the camshaft drive and driven gears, the corresponding valve lifter is at its highest point.

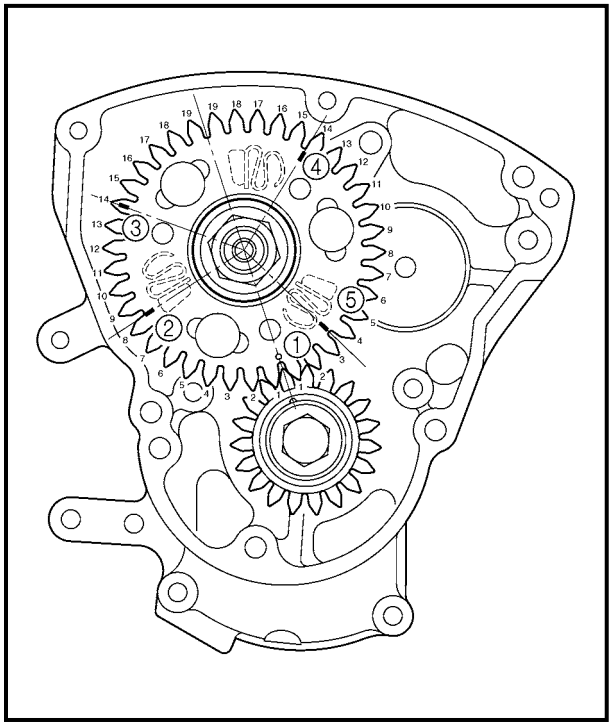

① Piston #1 TDC punch mark
② Cylinder #2 intake valve at its highest point
③ Cylinder #1 exhaust valve at its highest point
④ Cylinder #1 intake valve at its highest point
⑤ Cylinder #2 exhaust valve at its highest point

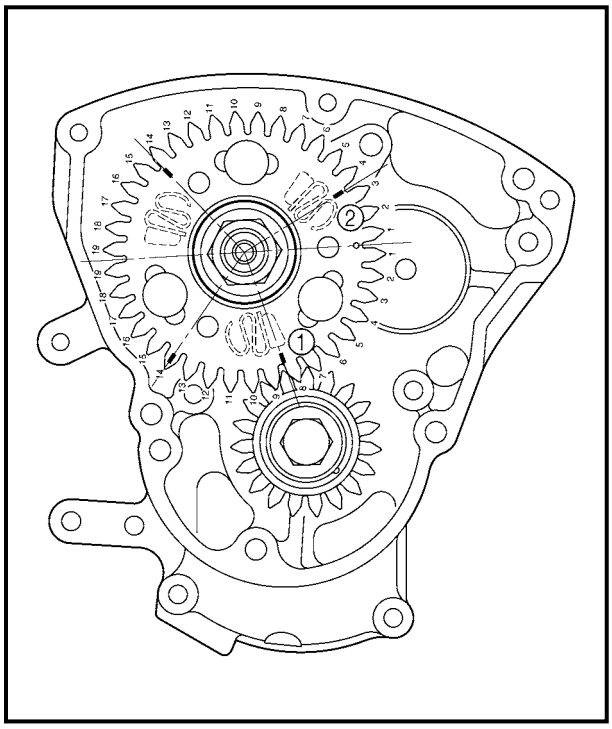

h. Rotate the crankshaft until the mark (on the camshaft driven gear) for the valve lifter to be bled aligns with the camshaft drive gear as shown.
   Example: For bleeding the cylinder #2 intake valve lifter, align mark ① as shown.

① Cylinder #2 intake valve at its highest point
② Piston #1 TDC punch mark

i. Leave the camshaft drive and driven gears aligned for five minutes to allow the valve lifter to bleed.

j. If necessary, repeat steps "h" and "i" to bleed other valve lifters.

▲▲▲▲▲▲▲▲▲▲▲▲▲▲▲▲▲▲▲▲▲▲▲▲▲▲▲▲

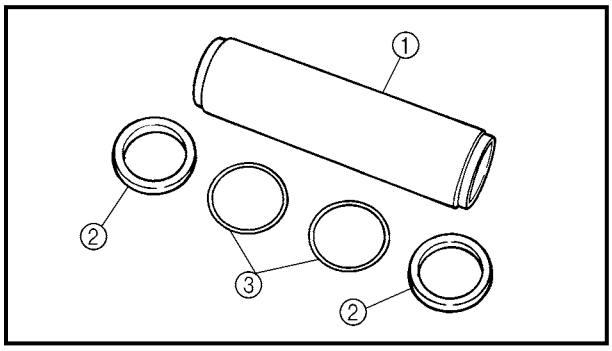

CHECKING THE PUSH ROD COVERS

1. Check:
   - push rod cover ①
     Cracks/damage → Replace.
   - oil seal ②
   - O-ring ③
     Damage/wear → Replace the oil seal and O-ring as a set.

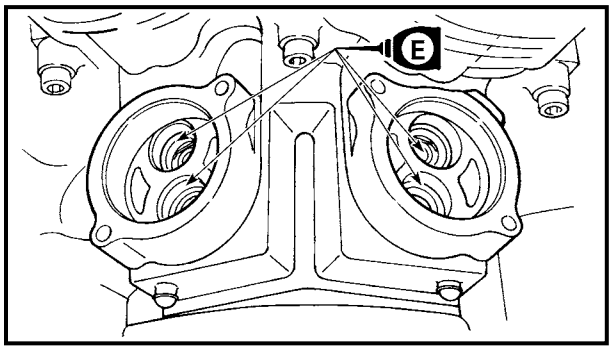

INSTALLING THE VALVE LIFTERS AND PUSH ROD COVERS

1. Install:
   - valve lifter cases (front and rear)
   - valve lifters

NOTE:
- Install the valve lifter in the correct place.
- After installing the valve lifters, fill the tops of them with engine oil.

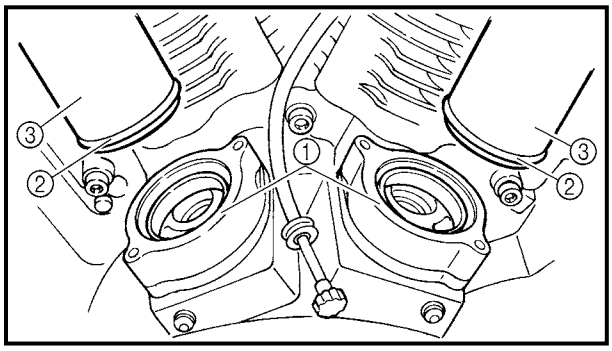

2. Install:
   - oil seals ①
   - O-rings ②
   - push rod covers ③

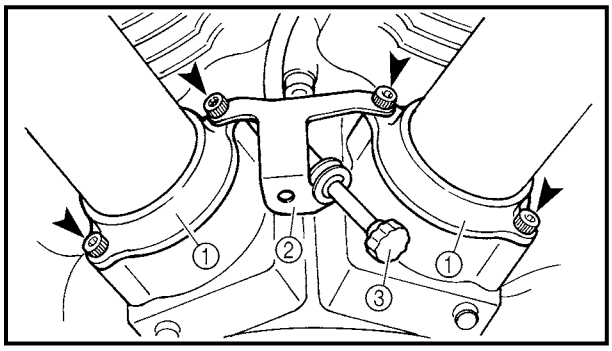

3. Install:
   - valve lifter case covers ①
   - throttle stop screw holder ②
4. Hook:
   - throttle stop screw ③

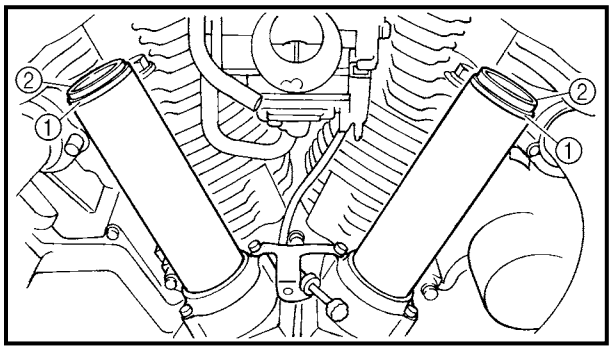

5. Install:
   - O-rings ①
   - oil seals ②

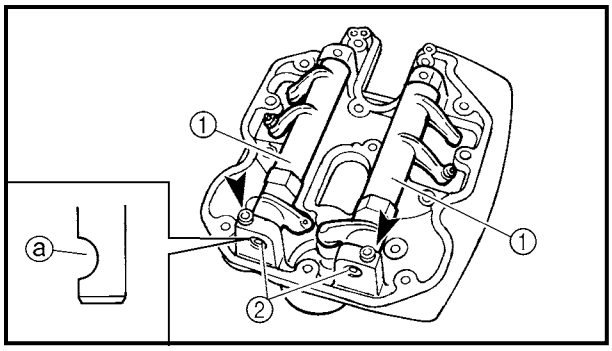

INSTALLING THE ROCKER ARMS AND PUSH RODS

The following procedure applies to both cylinders.

1. Install:
   - rocker arms ①
   - rocker arm shafts ②
     (onto rocker arm base)

NOTE:

The thread hole ⓐ of the rocker arm shaft must face to the outside.

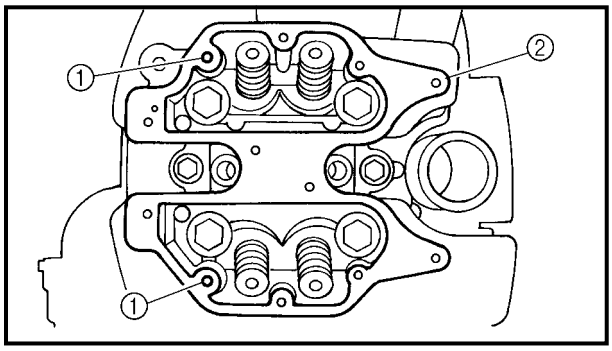

2. Install:
   - dowel pins ①
   - rocker arm gasket ② New

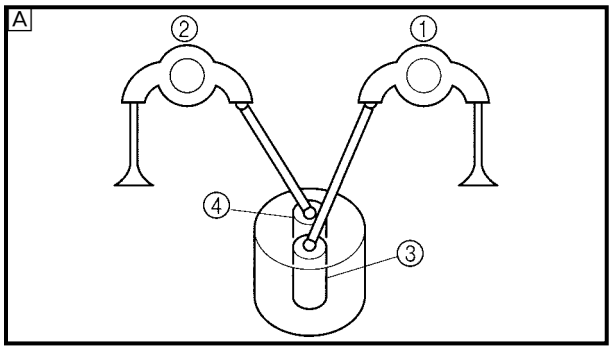

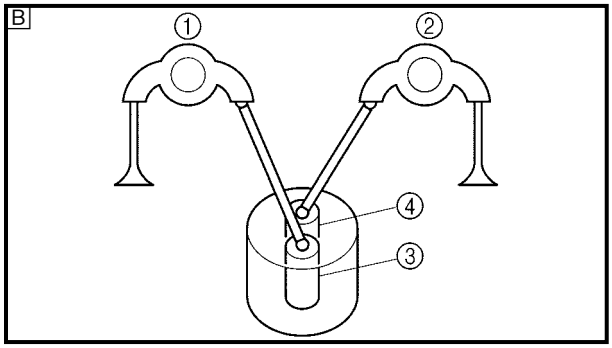

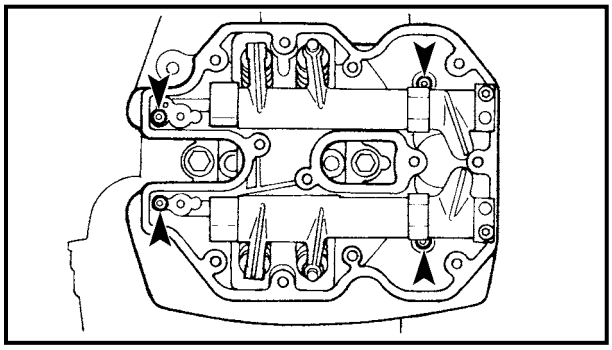

3. Install:
   - rocker arm base (with rocker arms)
   - push rods

▼▼▼▼▼▼▼▼▼▼▼▼▼▼▼▼▼▼▼▼▼▼▼▼▼▼▼▼▼▼▼▼

a. Put the rocker arm base on the cylinder head.

b. Install the push rods.

NOTE:

- Be sure to correctly install the push rods between the rocker arms and valve lifters as shown. The illustration is viewed from the right side of the motorcycle.

A Rear cylinder
B Front cylinder
① Intake side rocker arm
② Exhaust side rocker arm
③ Intake valve lifter
④ Exhaust valve lifter

- Lubricate the push rod end balls with engine oil.

c. Install the rocker arm base bolts.

NOTE:

Tighten the rocker arm base bolts in stages and in a crisscross pattern.

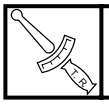	**Rocker arm base bolt** **10 Nm (1.0 m • kg, 7.2 ft • lb)**

▲▲▲▲▲▲▲▲▲▲▲▲▲▲▲▲▲▲▲▲▲▲▲▲▲▲▲▲▲▲▲▲

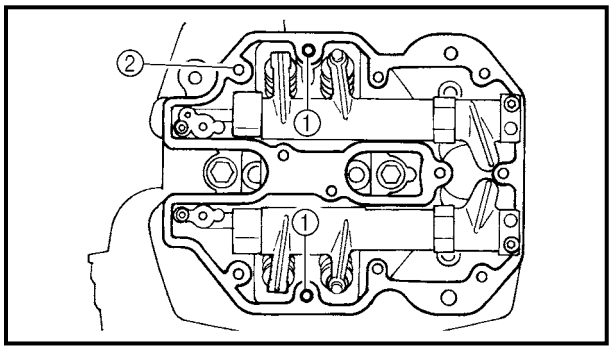

INSTALLING THE CYLINDER HEAD COVERS

The following procedure applies to both cylinders.

1. Install:
   - dowel pins ①
   - cylinder head cover spacer gasket ② New

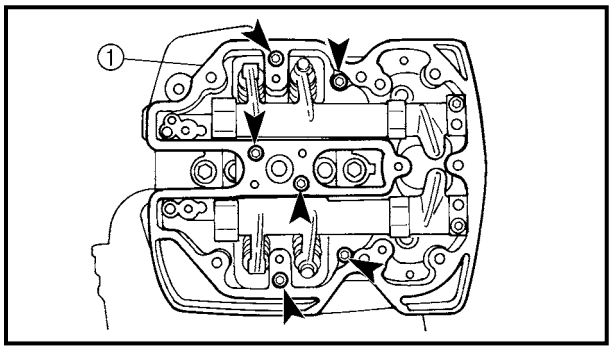

2. Install:
   - cylinder head cover spacer ①

10 Nm (1.0 m · kg, 7.2 ft · lb)

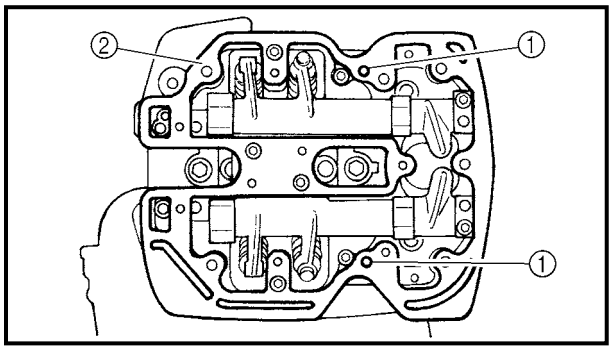

3. Install:
   - dowel pins ①
   - cylinder head cover gasket ② New

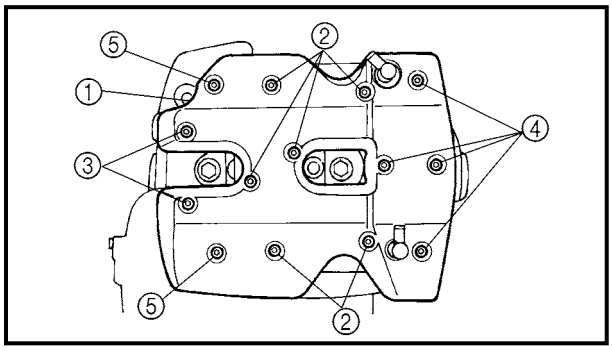

4. Install:
   - cylinder head cover ①

10 Nm (1.0 m · kg, 7.2 ft · lb)

Bolts ②: ℓ = 25 mm (0.98 in)
Bolts ③: ℓ = 35 mm (1.38 in)
Bolts ④: ℓ = 50 mm (1.97 in)
Bolts ⑤: ℓ = 65 mm (2.56 in)

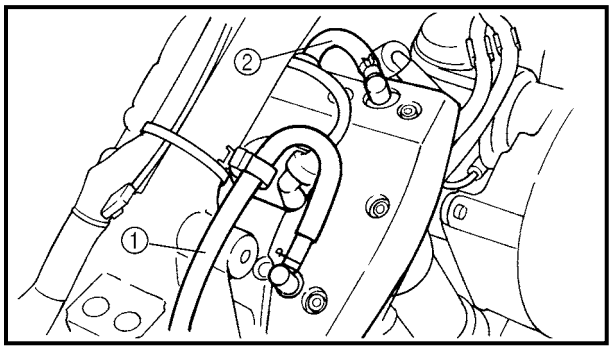

5. Connect:
   - oil tank breather hose ①
   - cylinder head breather hose ②

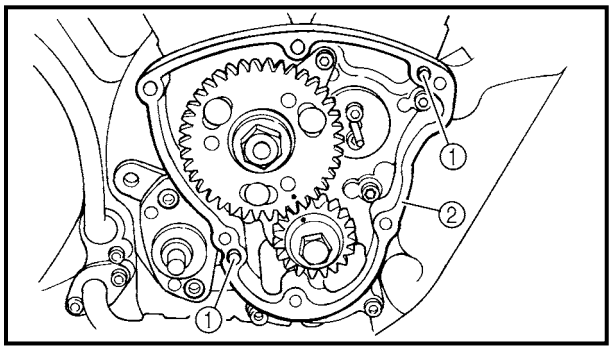

INSTALLING THE CAMSHAFT SPROCKET COVER AND ENGINE LEFT SIDE COVER

1. Install:
   - dowel pins ①
   - camshaft sprocket cover gasket ② New

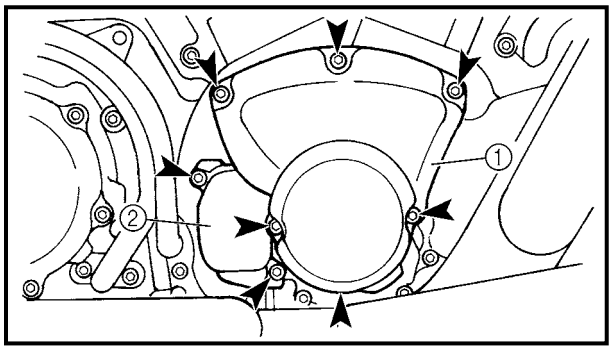

2. Install:
   - camshaft sprocket cover ①
   - decompression solenoid cover ②

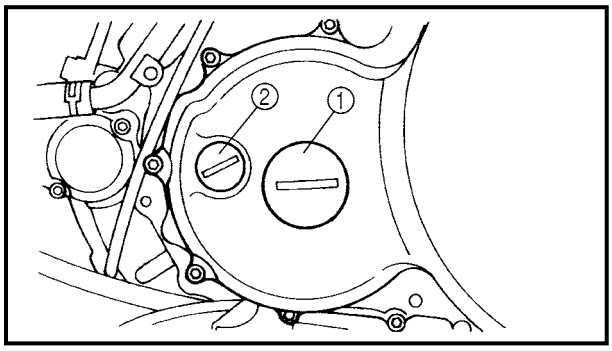

3. Install:
   - crankshaft end cover ①
   - timing mark accessing screw ②

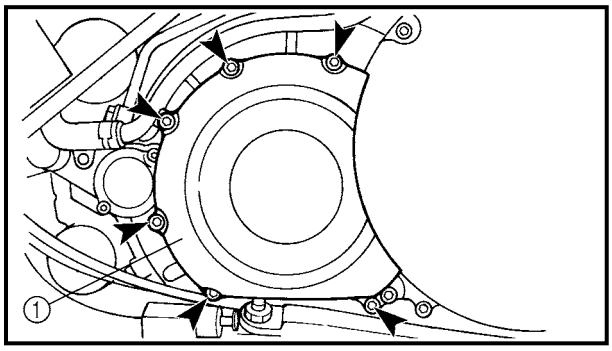

4. Install:
   - engine left side cover ①

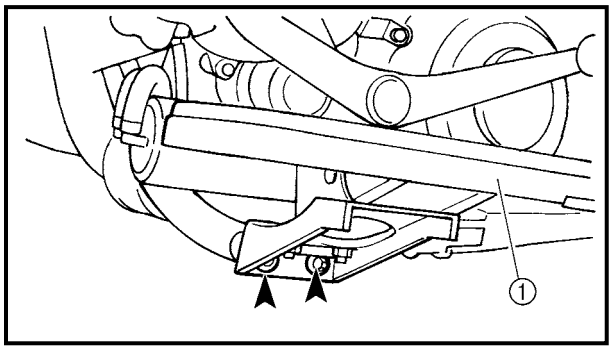

5. Install:
   - rider footrest (left) ①
6. Connect:
   - charcoal canister hoses

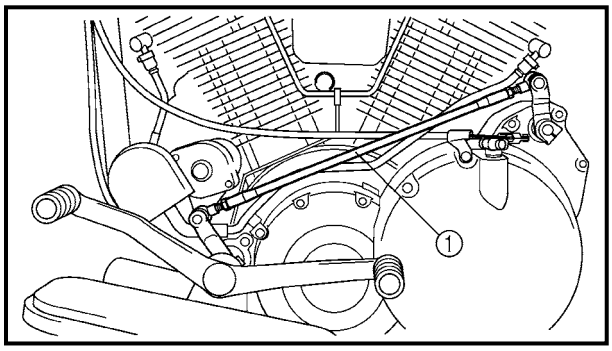

7. Install:
   - shift rod ①

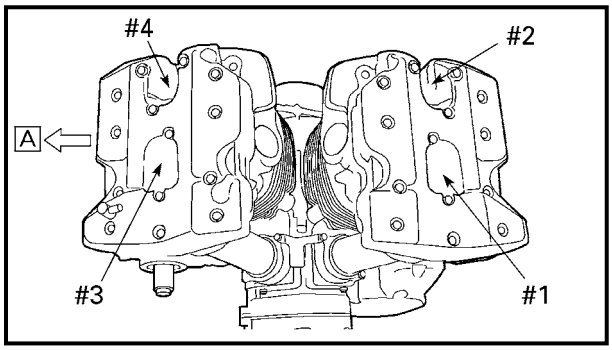

8. Install:
   - spark plugs
9. Connect:
   - spark plug caps

NOTE:
Refer to "CABLE ROUTING" in chapter 2.

A Forward

10. Fill:
    - oil tank
      (with the specified amount of the recommended engine oil)
      Refer to "CHANGING THE ENGINE OIL" in chapter 3.

11. Install:
    - air filter case
    - fuel tank
    - rider seat
      Refer to "AIR FILTER CASE", "FUEL TANK" and "SEATS AND SIDE COVERS" in chapter 3.

12. Adjust:
    - installed shift rod length
      Refer to "ADJUSTING THE SHIFT PEDAL" in chapter 3.

CAMSHAFTS

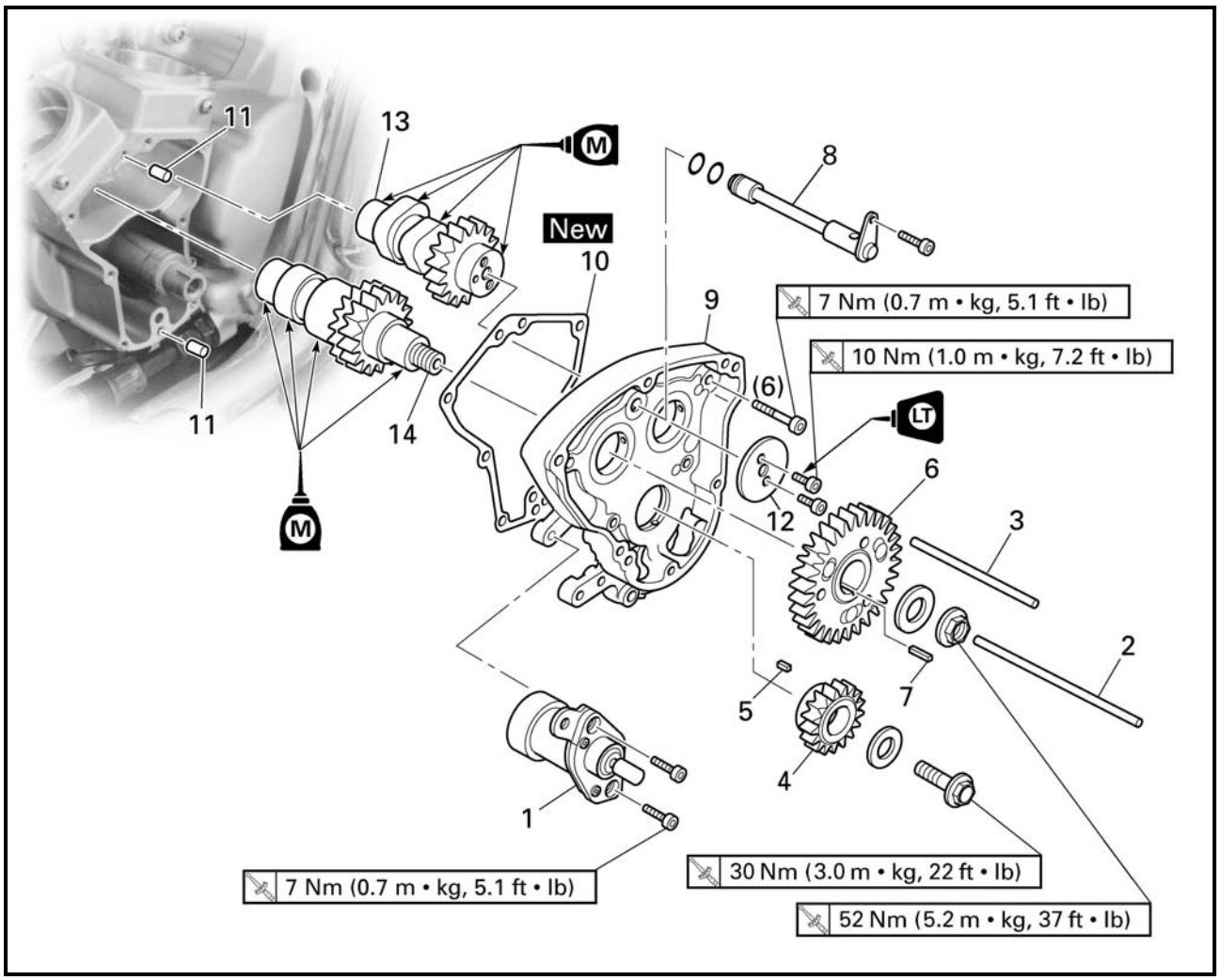

Order	Job/Part	Q'ty	Remarks
	Removing the camshafts		
	Valve lifters		Refer to "ROCKER ARMS, PUSH RODS AND VALVE LIFTERS".
	Muffler/exhaust pipes		Refer to "ENGINE".
1	Decompression solenoid	1	
2	Long decompression push rod	1	92 mm (3.6 in)
3	Short decompression push rod	1	78 mm (3.1 in)
4	Camshaft drive gear	1	
5	Straight key	1	
6	Camshaft driven gear	1	
7	Straight key	1	
8	Oil delivery pipe	1	

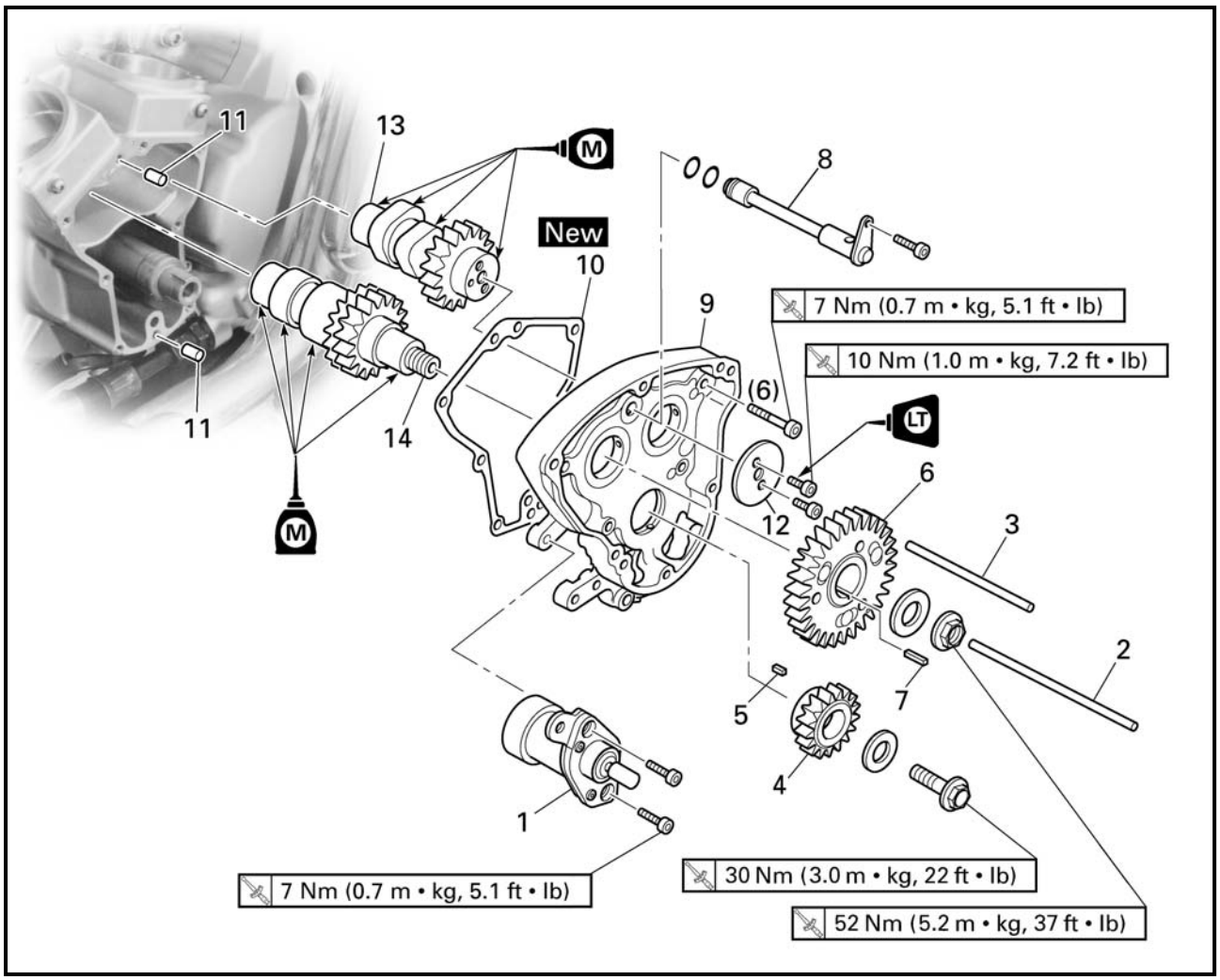

Order	Job/Part	Q'ty	Remarks
9	Camshaft cover	1	
10	Camshaft cover gasket	1	
11	Dowel pin	1	
12	Front cylinder camshaft end cover	1	
13	Front cylinder camshaft	1	
14	Rear cylinder camshaft	1	
			For installation, reverse the removal procedure.

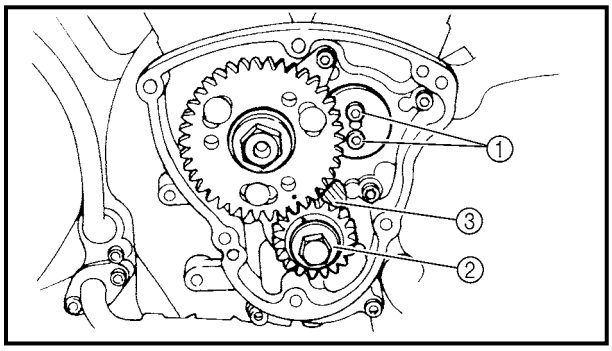

REMOVING THE CAMSHAFTS

1. Loosen:
   - front cylinder camshaft end cover bolts ①
   - camshaft drive gear bolt ②

NOTE:
- Place a folded copper washer ③ between the teeth of the camshaft drive gear and camshaft driven gear in order to lock them.
- Do not damage the teeth of the camshaft drive and camshaft driven gears.

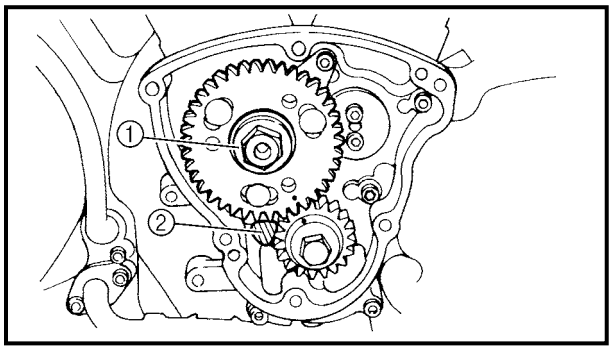

2. Loosen:
   - camshaft driven gear nut ①

NOTE:
- Place a folded copper washer ② between the teeth of the camshaft drive gear and camshaft driven gear in order to lock them.
- Do not damage the teeth of the camshaft drive and camshaft driven gears.

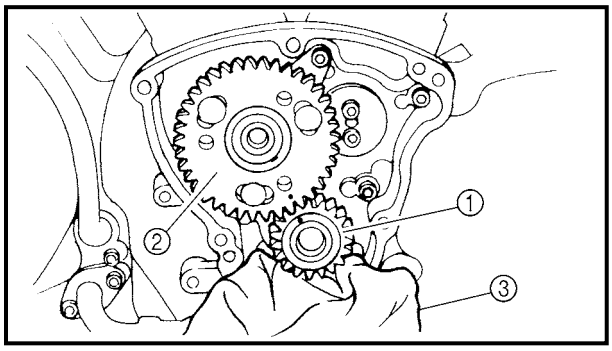

3. Remove:
   - front cylinder camshaft end cover
   - camshaft drive gear ①
   - camshaft driven gear ②
   - straight keys

NOTE:
Cover the crankcase hole with a clean rag ③ to prevent the straight keys from falling into the crankcase.

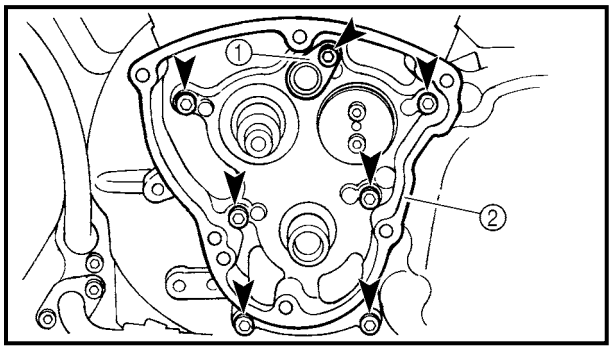

4. Remove:
   - oil delivery pipe ①
   - camshaft cover ②
     (along with the camshafts)

NOTE:
Loosen each bolt 1/4 of a turn at a time, in stages and in a crisscross pattern. After all of the bolts are fully loosened, remove them.

EAS00204
CHECKING THE CAMSHAFTS

1. Check:
   - cams
     Blue discoloration/pitting/scratches → Replace the camshaft.

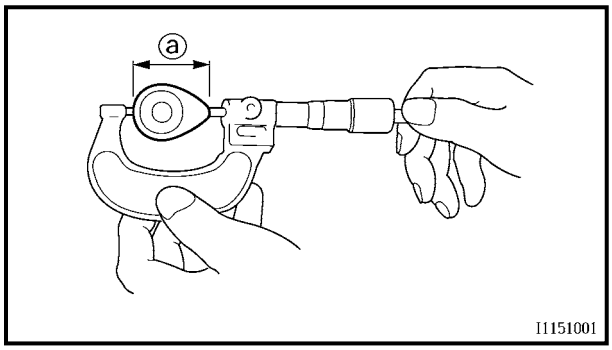

2. Measure:
   - cam dimensions ⓐ and ⓑ
     Out of specification → Replace the camshaft.

Minimum cam lobe dimensions
Intake cam
ⓐ 36.494 mm (1.4368 in)
ⓑ 31.850 mm (1.2539 in)
Exhaust cam
ⓐ 36.454 mm (1.4352 in)
ⓑ 31.850 mm (1.2539 in)

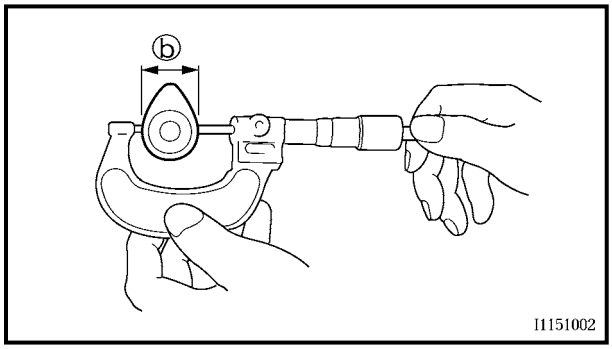

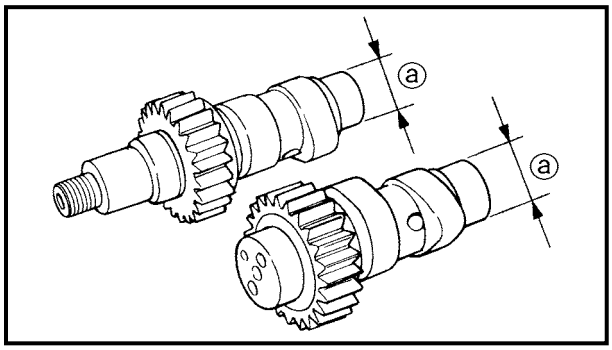

3. Measure:
   - camshaft journal diameter (crankcase side) ⓐ
     Out of specification → Replace the camshaft.

Camshaft journal diameter (crankcase side)
24.937 ~ 24.950 mm
(0.9818 ~ 0.9823 in)

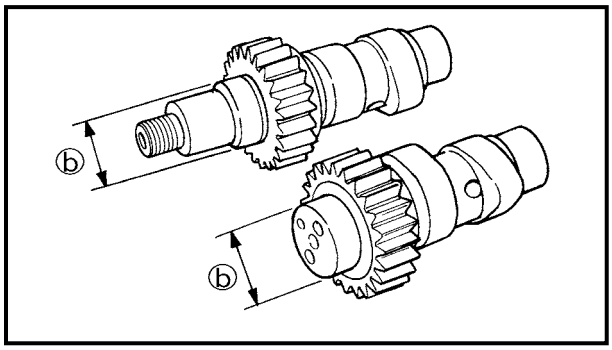

4. Measure:
   - camshaft journal diameter (camshaft cover side) ⓑ
     Out of specification → Replace the camshaft.

Camshaft journal diameter (camshaft cover side)
27.967 ~ 27.980 mm
(1.1011 ~ 1.1016 in)

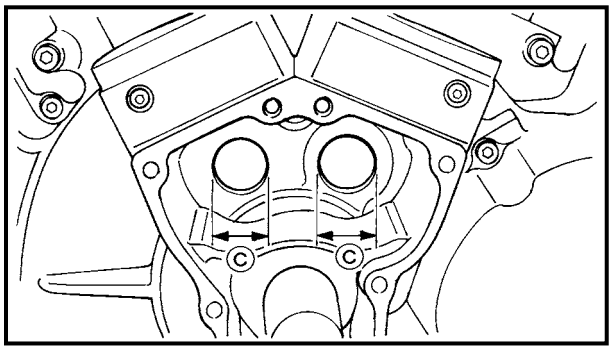

5. Measure:
   - crankcase hole inside diameter ⓒ
     Out of specification → Replace the crankcase.

Crankcase hole inside diameter
25.000 ~ 25.021 mm
(0.9843 ~ 0.9851 in)

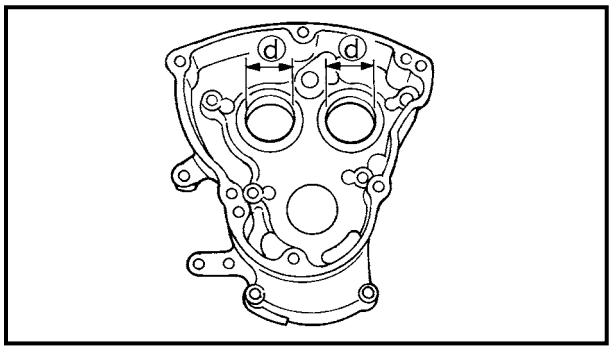

6. Measure:
   - camshaft cover hole inside diameter ⓓ
     Out of specification → Replace the camshaft cover.

Camshaft cover hole inside diameter
28.000 ~ 28.021 mm
(1.1024 ~ 1.1032 in)

7. Calculate:
   - camshaft-to-crankcase clearance
     Out of specification → Replace the defective part(s).

NOTE:
Calculate the clearance by subtracting the crankcase side camshaft journal diameter (crankcase side) from the crankcase hole inside diameter.

Camshaft to crankcase clearance
0.050 ~ 0.084 mm
(0.0020 ~ 0.0033 in)

8. Calculate:
   - camshaft-to-camshaft cover clearance
     Out of specification → Replace the defective part(s).

NOTE:
Calculate the clearance by subtracting the camshaft journal diameter (camshaft cover side) from the camshaft cover hole inside diameter.

Camshaft to camshaft cover clearance
0.020 ~ 0.054 mm
(0.0008 ~ 0.0021 in)

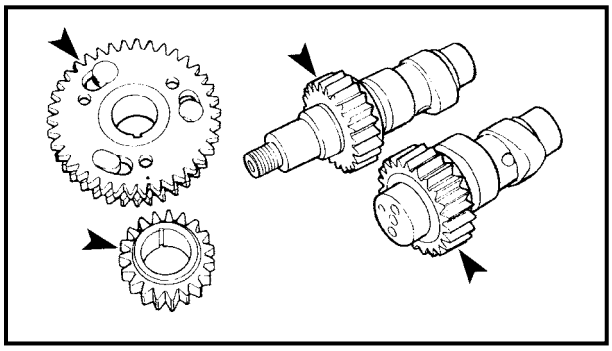

9. Check:
   - camshaft drive gears
   - camshaft driven gears
     Chips/pitting/roughness/wear → Replace the defective part(s).

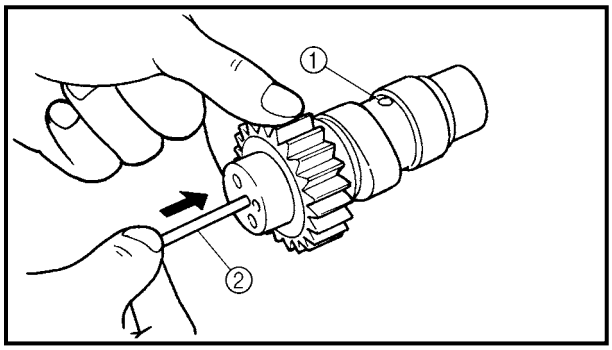

CHECKING THE DECOMPRESSION SYSTEM

1. Check:
   - decompression system

NOTE:

- Check the decompression system while the decompression push rod is installed in the camshaft.
- Check that the decompression pin ① projects from the camshaft.
- Check that the decompression push rod ② moves smoothly.

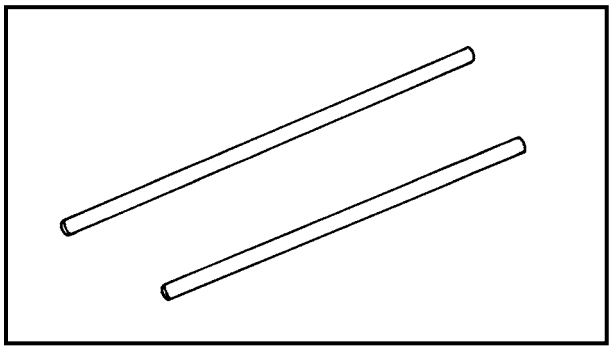

2. Check:
   - decompression push rods
     Bends/damage → Replace.

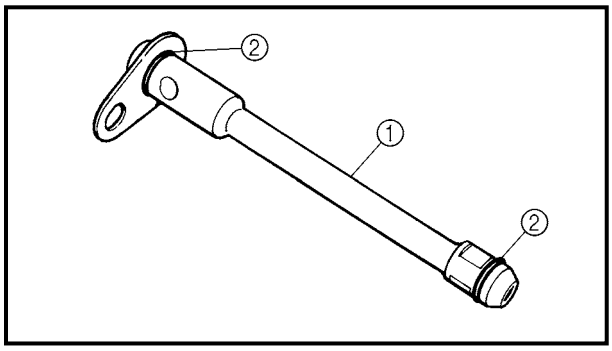

CHECKING THE OIL DELIVERY PIPE

1. Check:
   - oil delivery pipe ①
     Damage → Replace.
     Obstruction → Wash and blow out with compressed air.
   - O-rings ②
     Damage/wear → Replace.

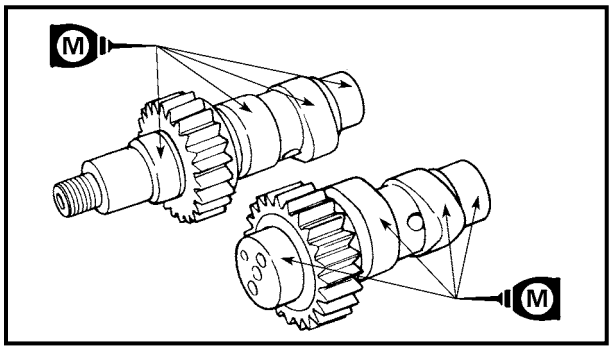

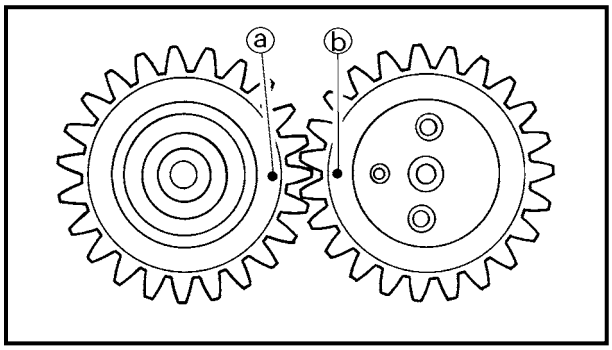

INSTALLING THE CAMSHAFTS

1. Install:
   - camshafts
     (to the camshaft cover)
   - front cylinder camshaft end cover

NOTE:

- Apply molybdenum disulfide oil onto the camshaft journals and cam lobes.
- Align the punch mark ⓐ on the rear cylinder camshaft with the punch mark ⓑ on the front cylinder camshaft.

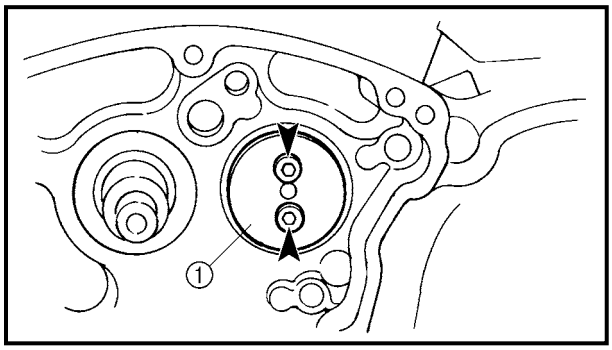

2. Install:
   - front cylinder camshaft end cover ①

NOTE:

Finger tighten the end cover bolts.

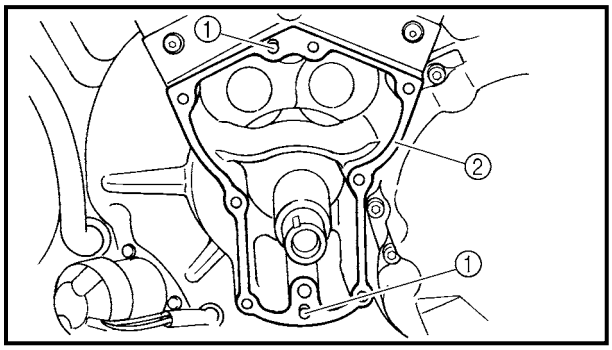

3. Install:
   - dowel pins ①
   - camshaft cover gasket ② New

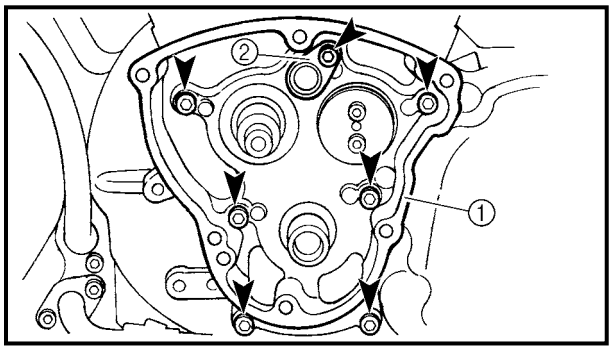

4. Install:
   - camshaft cover ①
     (along with the camshafts)
   - oil delivery pipe ②

NOTE:
Tighten the camshaft cover bolts in stages and in a crisscross pattern.

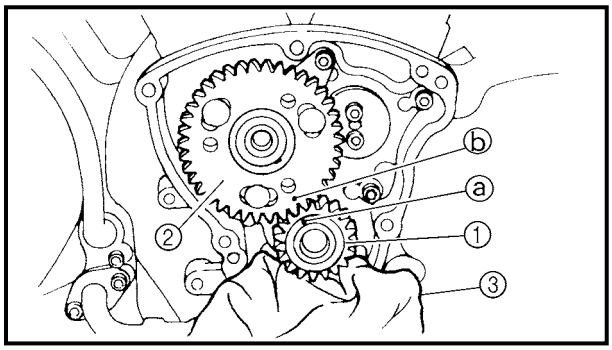

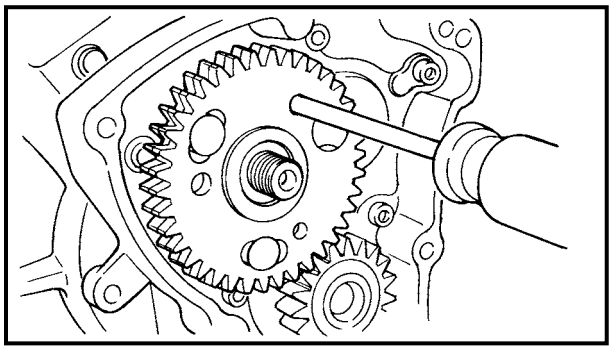

5. Install:
   - straight keys
   - camshaft drive gear ①
   - camshaft driven gear ②

NOTE:
- Cover the crankcase hole with a clean rag ③ to prevent the straight keys from falling into the crankcase.
- Align the punch mark ⓐ on the camshaft drive gear ① with the punch mark ⓑ on the camshaft driven gear ②.
- Insert a cross-headed screwdriver into one of the holes in the outer camshaft driven gear and rotate the gear until the teeth of both driven gears are aligned. The teeth of both camshaft driven gears must be aligned for installation.

6. Install:
   - washers
   - camshaft drive gear bolt
   - camshaft driven gear nut

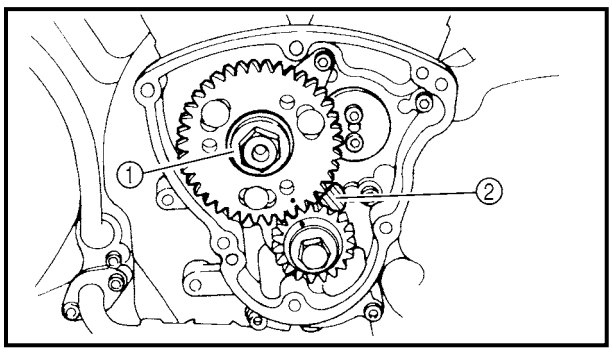

7. Tighten:
   - camshaft driven gear nut ①

	52 Nm (5.2 m · kg, 37 ft · lb)

NOTE:
- Place a folded copper washer ② between the teeth of the camshaft drive gear and camshaft driven gear in order to lock them.
- Do not damage the teeth of the camshaft drive and camshaft driven gear.

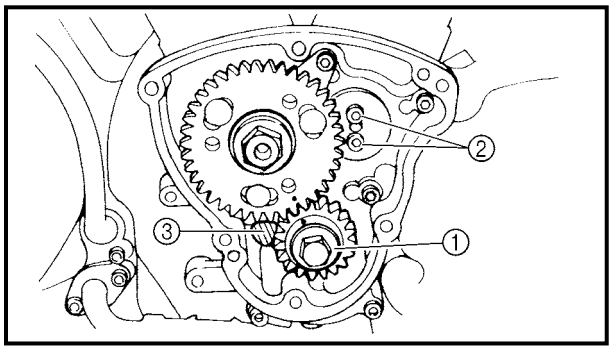

8. Tighten:
   - camshaft drive gear bolt ①

     30 Nm (3.0 m · kg, 22 ft · lb)
   - front cylinder camshaft end cover bolts ②

NOTE:
- Place a folded copper washer ③ between the teeth of the camshaft drive gear and camshaft driven gear in order to lock them.
- Do not damage the teeth of the camshaft drive and camshaft driven gear.

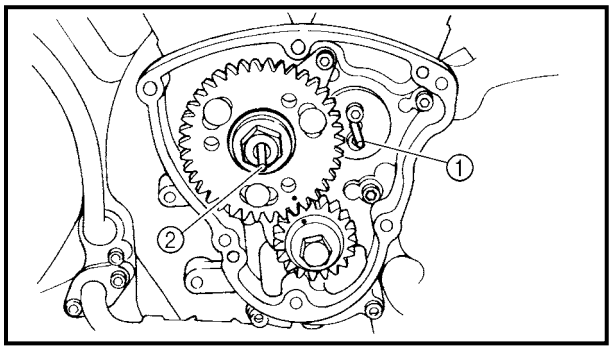

9. Install:
   - short decompression push rod ①
   - long decompression push rod ②

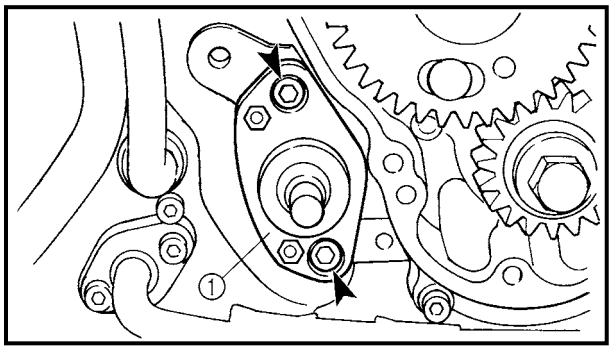

10. Install:
    - decompression solenoid ①

11. Install:
    - valve lifters
    - push rods
    - rocker arms
    - cylinder head covers
      Refer to “ROCKER ARMS, PUSH RODS AND VALVE LIFTERS”.
    - exhaust pipes
    - muffler
      Refer to “ENGINE”.

12. Fill:
- oil tank
  (with the specified amount of the recommended engine oil)
  Refer to "CHANGING THE ENGINE OIL" in chapter 3.

13. Install:
- air filter case
- fuel tank
- rider seat
  Refer to "AIR FILTER CASE", "FUEL TANK" and "SEATS AND SIDE COVERS" in chapter 3.

CYLINDER HEADS

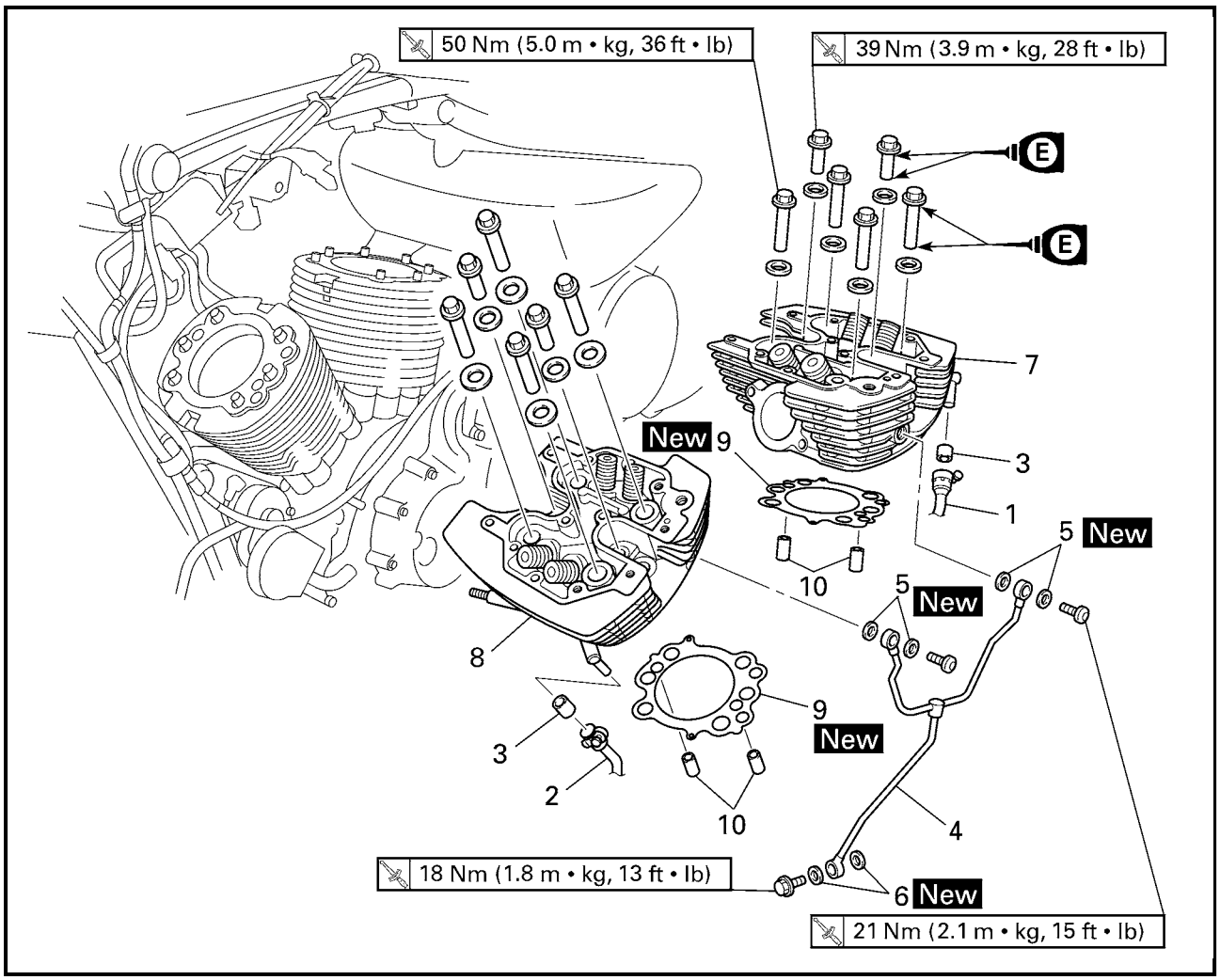

Order	Job/Part	Q'ty	Remarks
	Removing the cylinder head		Remove the parts in the order listed.
	Rider seat/fuel tank/air filter case		Refer to "SEATS AND SIDE COVERS", "FUEL TANK" and "AIR FILTER CASE" in chapter 3.
	Carburetor/carburetor joint		Refer to "CARBURETOR" in chapter 6.
	Muffler/exhaust pipes		Refer to "ENGINE".
	Rocker arms/push rod cover		Refer to "ROCKER ARMS, PUSH RODS AND VALVE LIFTERS".
1	Reed valve case to rear cylinder pipe	1	Disconnect.
2	Reed valve case to front cylinder pipe	1	Disconnect.
3	Gasket	2	
4	Oil delivery pipe	1	
5	Copper washer	4	

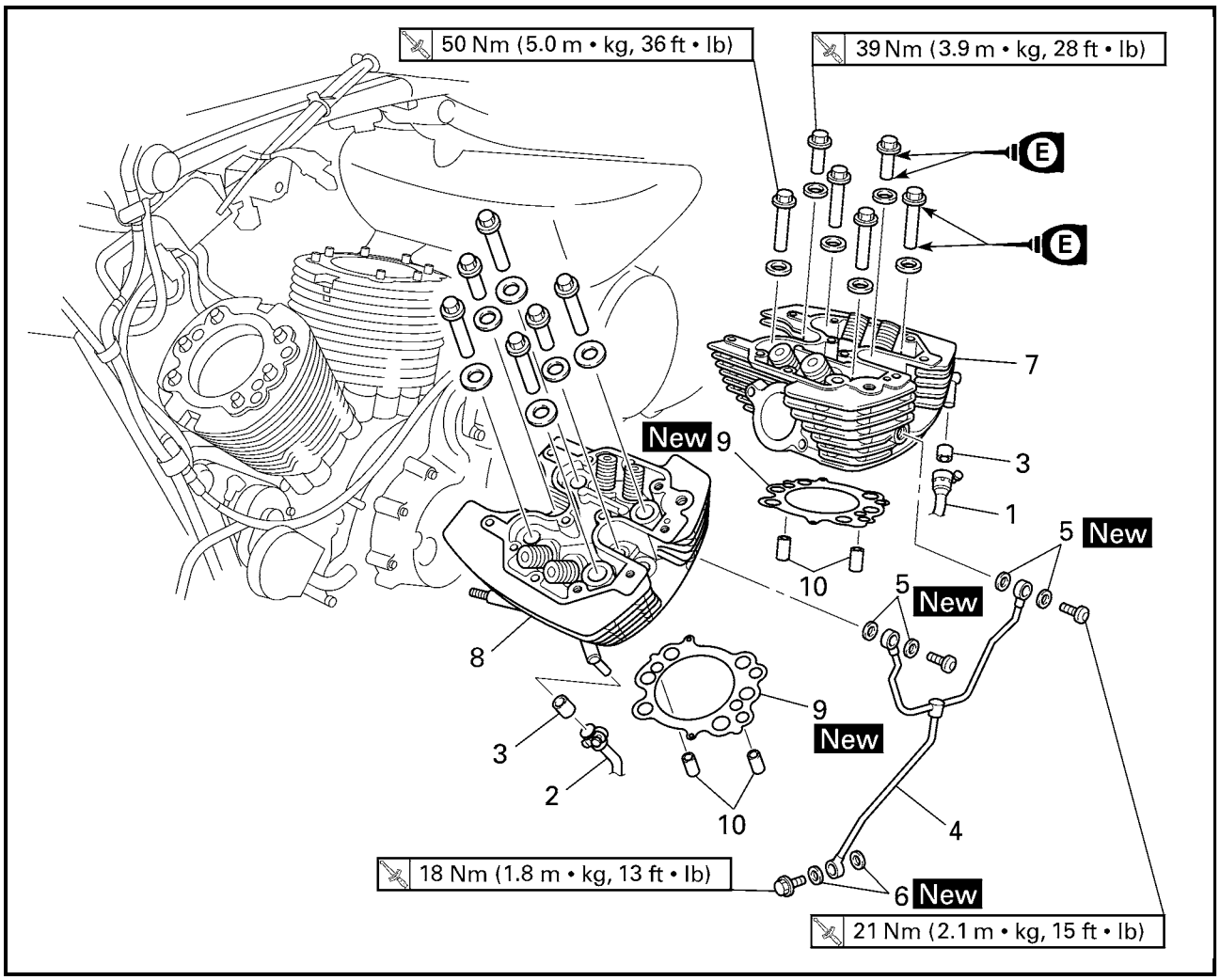

Order	Job/Part	Q'ty	Remarks
6	Copper washer	2	
7	Rear cylinder head	1	
8	Front cylinder head	1	
9	Cylinder head gasket	2	
10	Dowel pin	4	
			For installation, reverse the removal procedure.

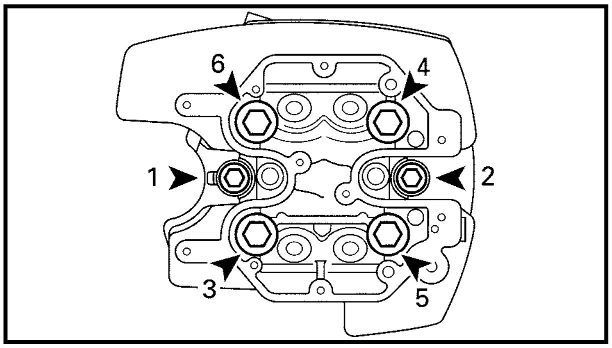

REMOVING THE CYLINDER HEADS

1. Remove:
   - cylinder head

NOTE:
- Loosen the nuts in the proper sequence.
- Follow the numerical order shown in the illustration. Loosen each bolt 1/4 of a turn at a time until all of the nuts are loose.

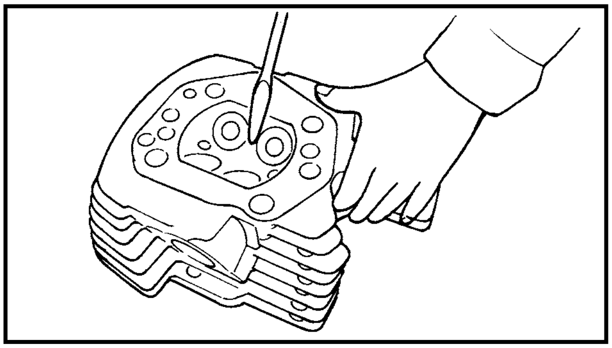

EAS00228
CHECKING THE CYLINDER HEADS

The following procedure applies to each cylinder head.

1. Eliminate:
   - combustion chamber carbon deposits (with a rounded scraper)

NOTE:
Do not use a sharp instrument to avoid damaging or scratching:
- spark plug bore threads
- valve seats

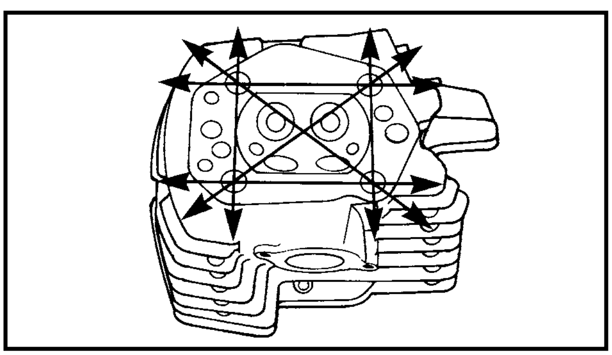

2. Check:
   - cylinder head
     Damage/scratches → Replace.
3. Measure:
   - cylinder head warpage
     Out of specification → Resurface the cylinder head.

Maximum cylinder head warpage
0.10 mm (0.0039 in)

▼▼▼▼▼▼▼▼▼▼▼▼▼▼▼▼▼▼▼▼▼▼▼▼▼▼▼▼▼▼▼

a. Place a straightedge ① and a thickness gauge ② across the cylinder head.

b. Measure the warpage.

c. If the limit is exceeded, resurface the cylinder head as follows.

d. Place a 400 ~ 600 grit wet sandpaper on the surface plate and resurface the cylinder head using a figure-eight sanding pattern.

NOTE:
To ensure an even surface, rotate the cylinder head several times.

▲▲▲▲▲▲▲▲▲▲▲▲▲▲▲▲▲▲▲▲▲▲▲▲▲▲▲▲▲▲

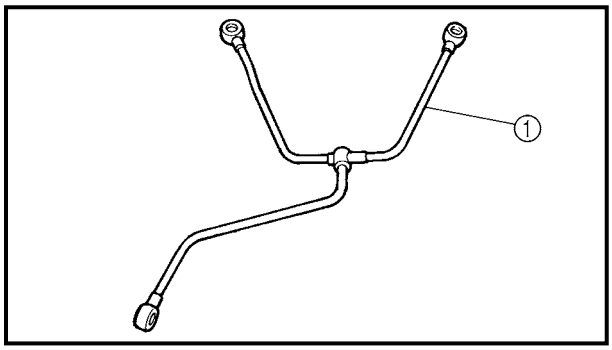

CHECKING THE OIL DELIVERY PIPE

1. Check:
   - oil delivery pipe ①
     Damage → Replace.
     Obstruction → Wash and blow out with compressed air.

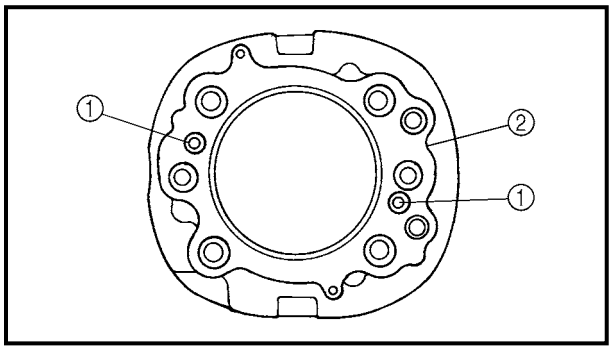

EAS00232
INSTALLING THE CYLINDER HEADS

1. Install:
   - dowel pins ①
   - gasket ② New

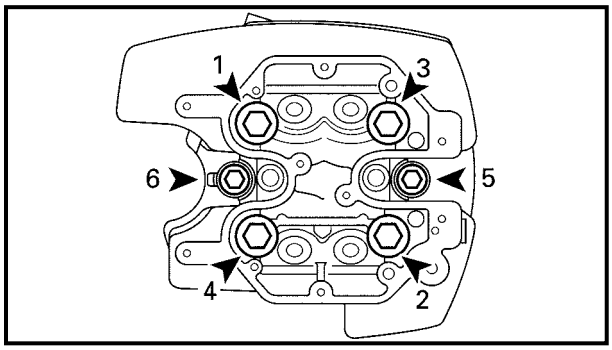

2. Install:
   - cylinder heads
   - washers
   - cylinder head nuts (M12: 1 ~ 4)

	50 Nm (5.0 m · kg, 36 ft · lb)

   - cylinder head nuts (M10: 5, 6)

	39 Nm (3.9 m · kg, 28 ft · lb)

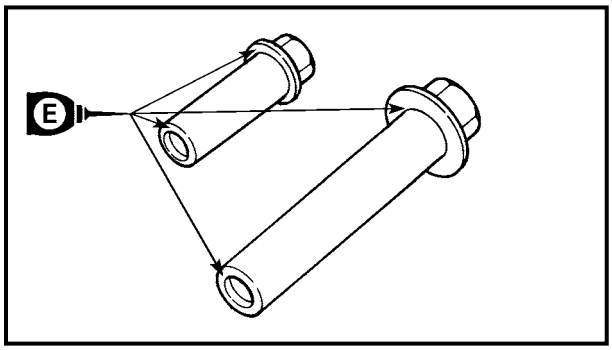

NOTE:
- Lubricate the cylinder head nuts with engine oil.
- Tighten the cylinder head nuts in the proper tightening sequence as shown and torque them in two stages.

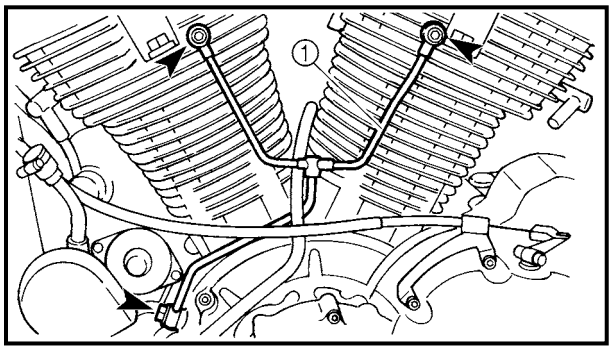

3. Install:
   - copper washers New
   - oil delivery pipe ①
   - oil delivery pipe bolts (M10)

     21 Nm (2.1 m · kg, 15 ft · lb)
   - oil delivery pipe bolt (M8)

     18 Nm (1.8 m · kg, 13 ft · lb)

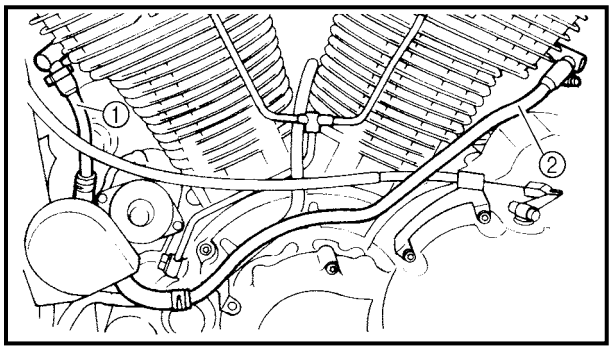

4. Install:
   - gaskets
   - reed valve case to front cylinder pipe ①
   - reed valve case to rear cylinder pipe ②

5. Install:
   - rocker arms
   - cylinder head covers
     Refer to “ROCKER ARMS, PUSH RODS AND VALVE LIFTERS”.
   - muffler
   - exhaust pipes
     Refer to “ENGINE”.
   - carburetor
     Refer to “CARBURETOR” in chapter 6.
   - air filter case
   - fuel tank
   - rider seat
     Refer to “AIR FILTER CASE”, “FUEL TANK” and “SEATS AND SIDE COVERS” in chapter 3.

VALVES AND VALVE SPRINGS

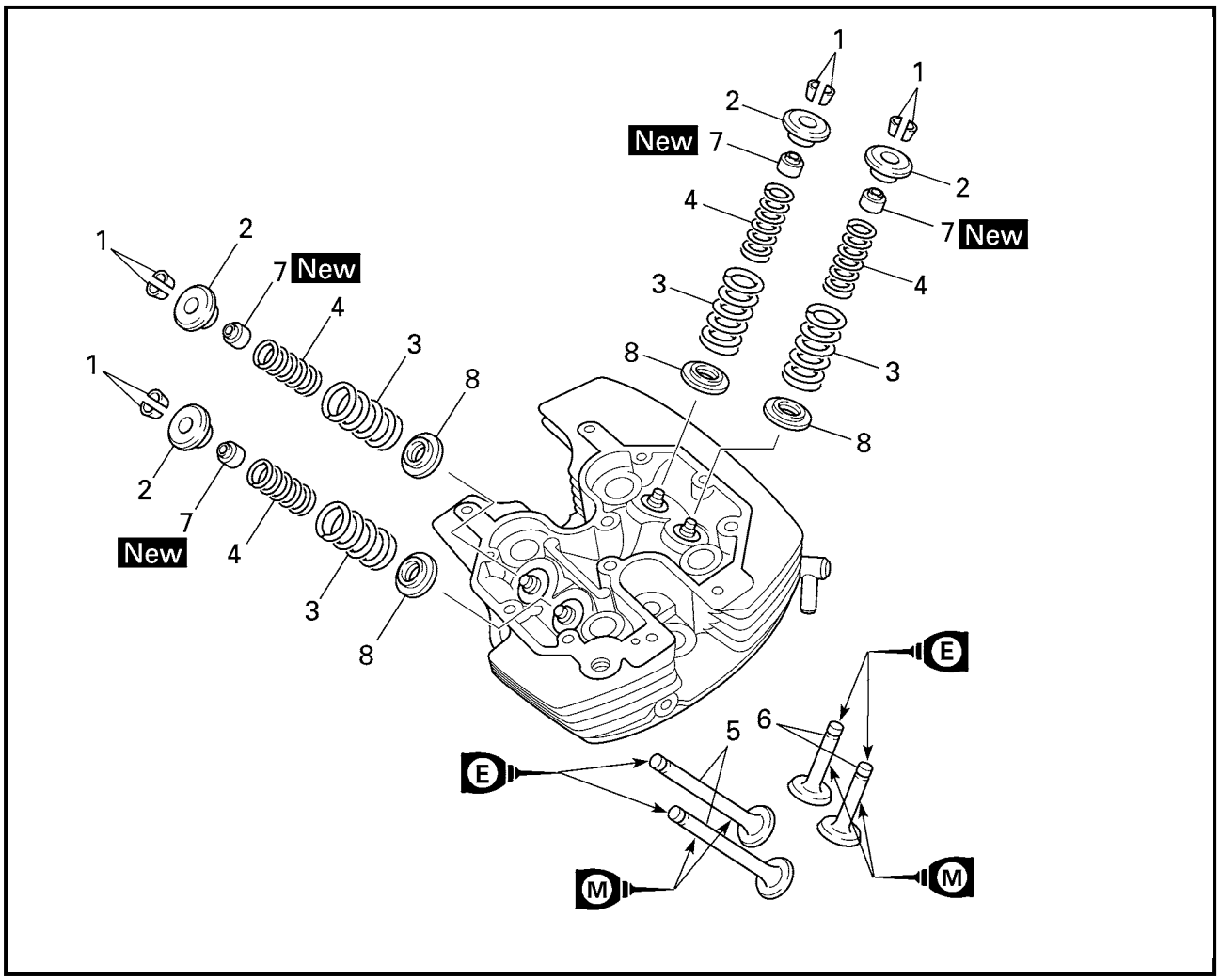

Order	Job/Part	Q'ty	Remarks
	Removing the valves and valve springs		Remove the parts in the order listed.
			The following procedure applies to both cylinders.
	Cylinder head		Refer to "CYLINDER HEADS".
1	Valve cotter	4	
2	Upper spring seat	4	
3	Outer valve spring	4	
4	Inner valve spring	4	
5	Intake valve	2	
6	Exhaust valve	2	
7	Valve oil seal	4	
8	Lower spring seat	4	
			For installation, reverse the removal procedure.

EAS00238
REMOVING THE VALVES

The following procedure applies to all of the valves and related components.

NOTE:

Before removing the internal parts of the cylinder head (e.g., valves, valve springs, valve seats), make sure the valves properly seal.

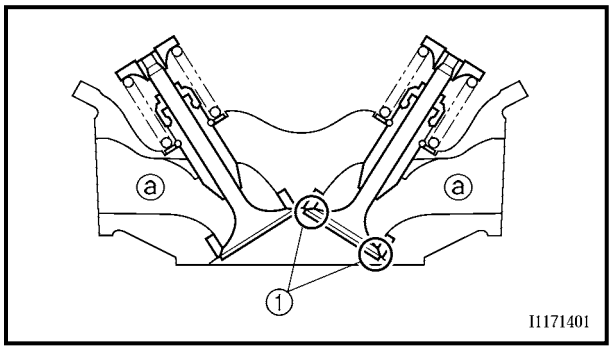

1. Check:
   - valve
     (for leakage)
     Leakage at the valve seat → Check the valve face, valve seat, and valve seat width.
     Refer to "CHECKING THE VALVE SEATS".

▼▼▼▼▼▼▼▼▼▼▼▼▼▼▼▼▼▼▼▼▼▼▼▼▼▼▼▼▼▼▼▼

a. Pour a clean solvent ⓐ into the intake and exhaust ports.

b. Check that the valves properly seal.

NOTE:

There should be no leakage at the valve seat ①.

▲▲▲▲▲▲▲▲▲▲▲▲▲▲▲▲▲▲▲▲▲▲▲▲▲▲▲▲▲▲▲▲

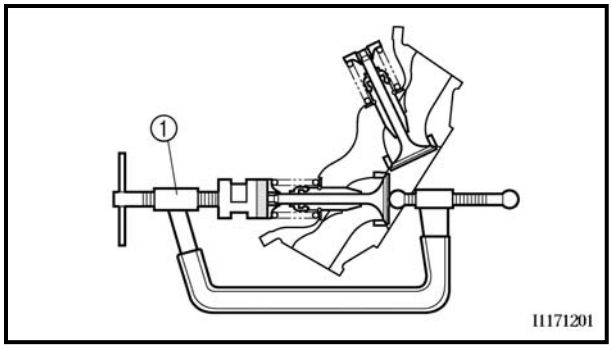

2. Remove:
   - valve cotters

NOTE:

Remove the valve cotters by compressing the valve springs with the valve spring compressor ①.

	Valve spring compressor **YM-04019**

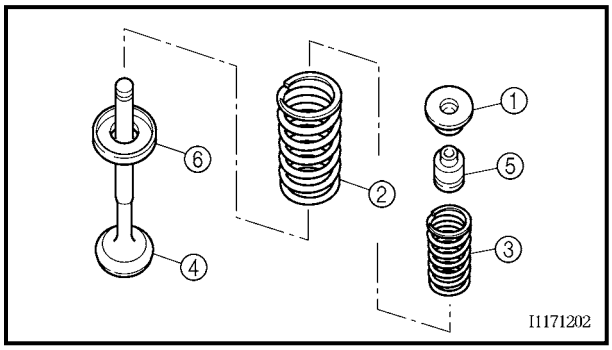

3. Remove:
   - upper spring seat ①
   - outer valve spring ②
   - inner valve spring ③
   - valve ④
   - oil seal ⑤
   - lower spring seat ⑥

NOTE:
Identify the position of each part very carefully so that it can be reinstalled in its original place.

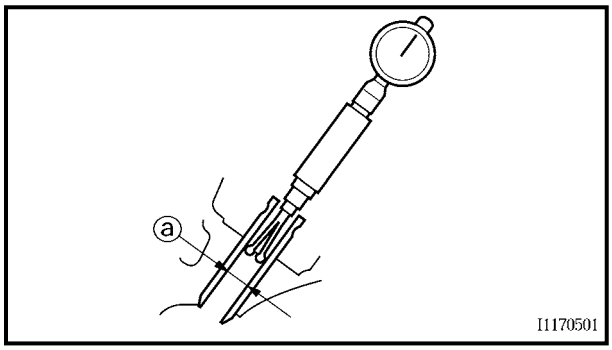

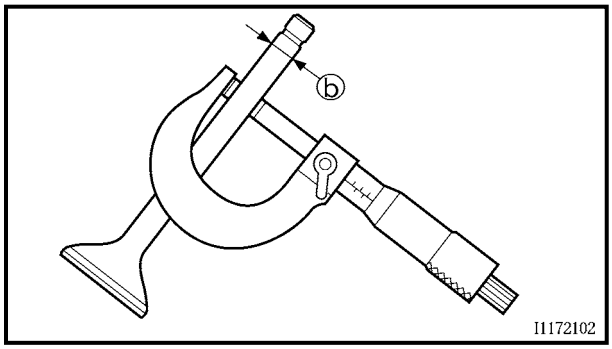

EAS00239
CHECKING THE VALVES AND VALVE GUIDES

The following procedure applies to all of the valves and valve guides.

1. Measure:
   - valve stem-to-valve guide clearance

Valve stem-to-valve guide clearance = Valve guide inside diameter ⓐ – Valve stem diameter ⓑ

Out of specification → Replace the valve guide.

Valve stem-to-valve guide clearance
Intake
0.010 ~ 0.037 mm
(0.0004 ~ 0.0015 in)
<Limit>: 0.08 mm (0.0031 in)
Exhaust
0.025 ~ 0.052 mm
(0.0006 ~ 0.0020 in)
<Limit>: 0.1 mm (0.004 in)

2. Replace:
   - valve guide

NOTE:
To ease valve guide removal and installation, and to maintain the correct fit, heat the cylinder head to 100 ˚C (212 ˚F) in an oven.

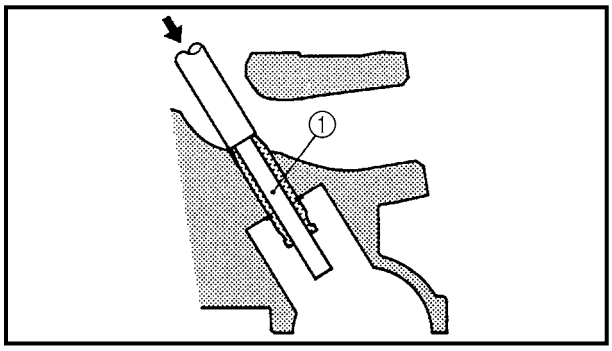

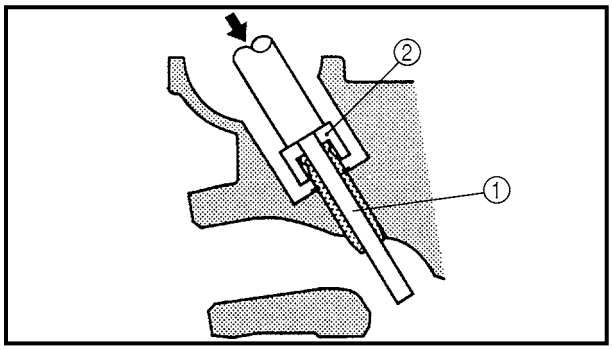

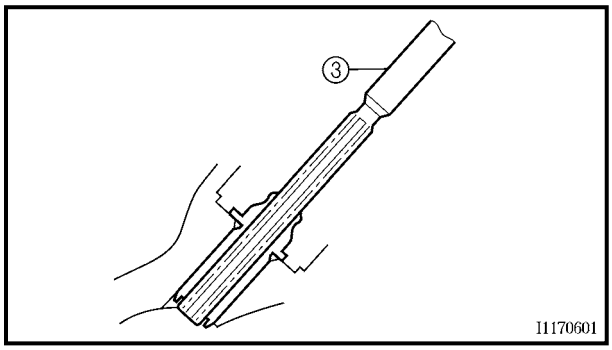

a. Remove the valve guide with the valve guide remover ①.
b. Install the new valve guide with the valve guide installer ② and valve guide remover ①.
c. After installing the valve guide, bore the valve guide with the valve guide reamer ③ to obtain the proper valve-stem-to-valve-guide clearance.

NOTE:
After replacing the valve guide, reface the valve seat.

Valve guide remover (6 mm)
YM-4064-A
Valve guide installer (6 mm)
YM-04065-A
Valve guide reamer (6 mm)
YM-04066

3. Eliminate:
   - carbon deposits
     (from the valve face and valve seat)
4. Check:
   - valve face
     Pitting/wear → Grind the valve face.
   - valve stem end
     Mushroom shape or diameter larger than the body of the valve stem → Replace the valve.
5. Measure:
   - valve margin thickness ⓐ
     Out of specification → Replace the valve.

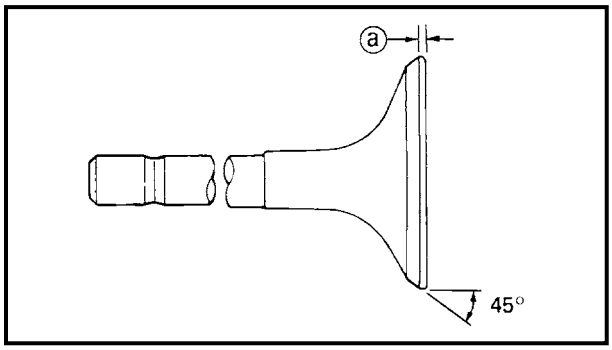

Valve margin thickness
0.7 ~ 1.3 mm (0.028 ~ 0.051 in)
<Limit>: 0.4 mm (0.016 in)

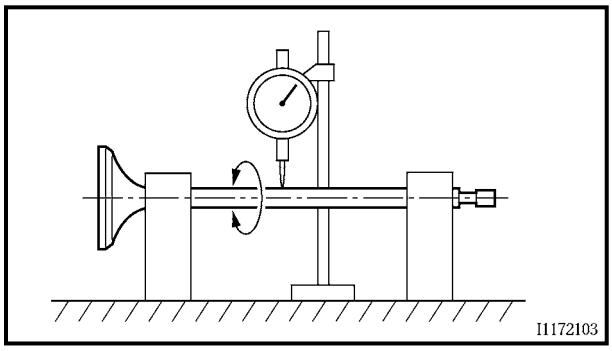

6. Measure:
   - valve stem runout
     Out of specification → Replace the valve.

NOTE:
- When installing a new valve, always replace the valve guide.
- If the valve is removed or replaced, always replace the oil seal.

Valve stem runout
0.01 mm (0.0004 in)

EAS00240
CHECKING THE VALVE SEATS

The following procedure applies to all of the valves and valve seats.

1. Eliminate:
   - carbon deposits
     (from the valve face and valve seat)
2. Check:
   - valve seat
     Pitting/wear → Replace the cylinder head.
3. Measure:
   - valve seat width ⓐ
     Out of specification → Replace the cylinder head.

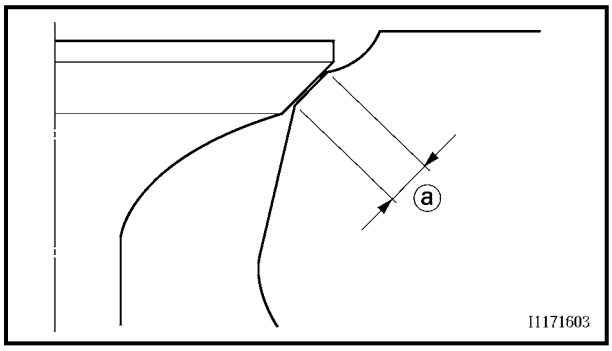

Valve seat width
Intake: 0.9 ~ 1.1 mm
(0.035 ~ 0.043 in)
<Limit>: 2.0 mm (0.079 in)
Exhaust: 0.9 ~ 1.1 mm
(0.035 ~ 0.043 in)
<Limit>: 2.0 mm (0.079 in)

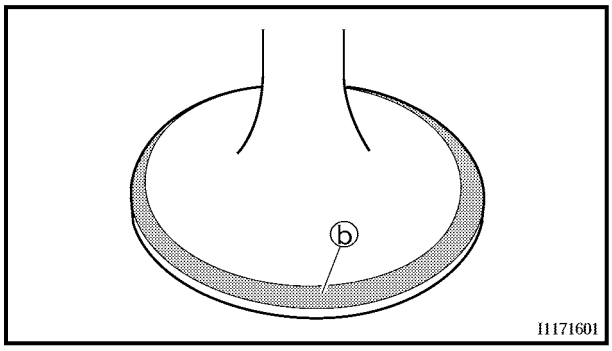

▼▼▼▼▼▼▼▼▼▼▼▼▼▼▼▼▼▼▼▼▼▼▼▼▼▼▼▼▼▼▼▼

a. Apply Mechanic's blueing dye (Dykem) ⓑ onto the valve face.
b. Install the valve into the cylinder head.
c. Press the valve through the valve guide and onto the valve seat to make a clear impression.

d. Measure the valve seat width.

NOTE:
Where the valve seat and valve face contacted one another, the blueing will have been removed.

▲▲▲▲▲▲▲▲▲▲▲▲▲▲▲▲▲▲▲▲▲▲▲▲▲▲▲▲▲▲

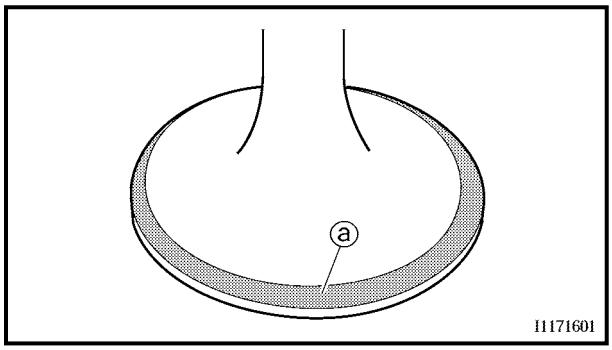

4. Lap:
   - valve face
   - valve seat

NOTE:
After replacing the cylinder head or replacing the valve and valve guide, the valve seat and valve face should be lapped.

▼▼▼▼▼▼▼▼▼▼▼▼▼▼▼▼▼▼▼▼▼▼▼▼▼▼▼▼▼▼

a. Apply a coarse lapping compound ⓐ to the valve face.

CAUTION:
Do not let the lapping compound enter the gap between the valve stem and the valve guide.

b. Apply molybdenum disulfide oil onto the valve stem.

c. Install the valve into the cylinder head.

d. Turn the valve until the valve face and valve seat are evenly polished, then clean off all of the lapping compound.

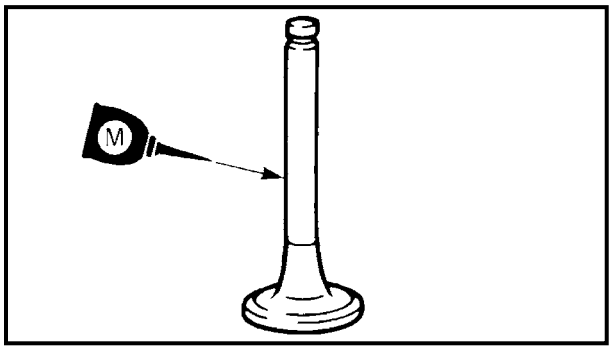

NOTE:
For the best lapping results, lightly tap the valve seat while rotating the valve back and forth between your hands.

e. Apply a fine lapping compound to the valve face and repeat the above steps.

f. After every lapping procedure, be sure to clean off all of the lapping compound from the valve face and valve seat.

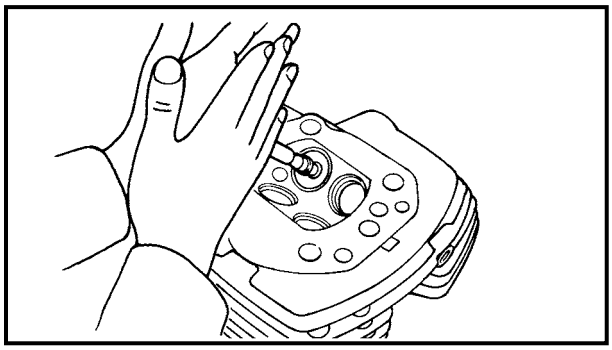

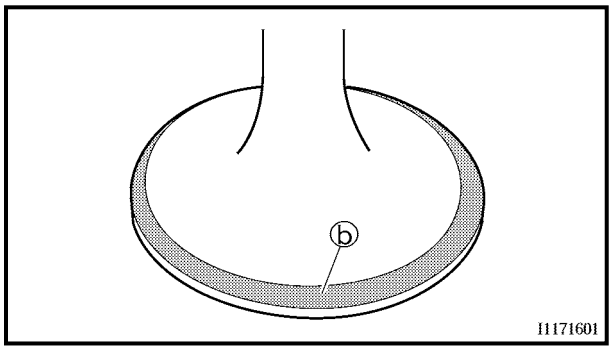

g. Apply Mechanic's blueing dye (Dykem) ⓑ onto the valve face.
h. Install the valve into the cylinder head.
i. Press the valve through the valve guide and onto the valve seat to make a clear impression.
j. Measure the valve seat width again. If the valve seat width is out of specification, reface and lap the valve seat.

▲▲▲▲▲▲▲▲▲▲▲▲▲▲▲▲▲▲▲▲▲▲▲▲▲▲▲▲▲▲

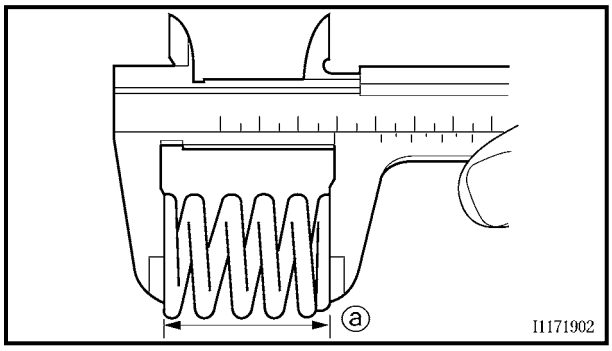

EAS00241
CHECKING THE VALVE SPRINGS

The following procedure applies to all of the valve springs.

1. Measure:
   - valve spring free length ⓐ
     Out of specification → Replace the valve spring.

Valve spring free length (intake and exhaust)
Inner valve spring
38.26 mm (1.51 in)
<Limit>: 36.26 mm (1.43 in)
Outer valve spring
43.25 mm (1.70 in)
<Limit>: 41.26 mm (1.62 in)

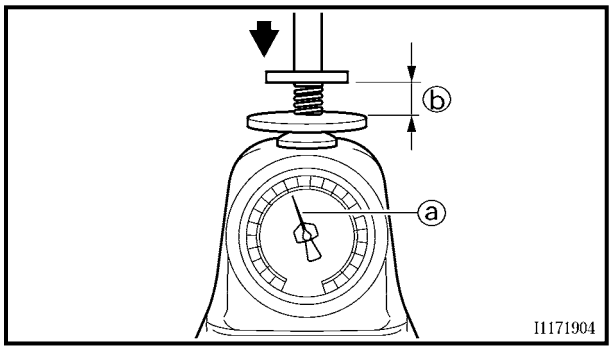

2. Measure:
   - compressed valve spring force ⓐ
     Out of specification → Replace the valve spring.

ⓑ Installed length

Compressed valve spring force (installed)
Intake and exhaust inner valve spring
6.3 ~ 7.3 kg at 29.0 mm
(13.9 ~ 16.1 lb at 1.14 in)
Intake and exhaust outer valve spring
13.9 ~ 16.1 kg at 31.0 mm
(30.6 ~ 35.5 lb at 1.22 in)

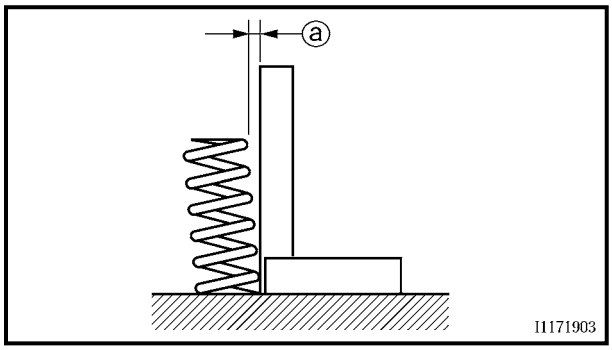

3. Measure:
   - valve spring tilt ⓐ
     Out of specification → Replace the valve spring.

Maximum valve spring tilt
Intake and exhaust inner valve spring
2.4 mm (0.094 in)
Intake and exhaust outer valve spring
2.4 mm (0.094 in)

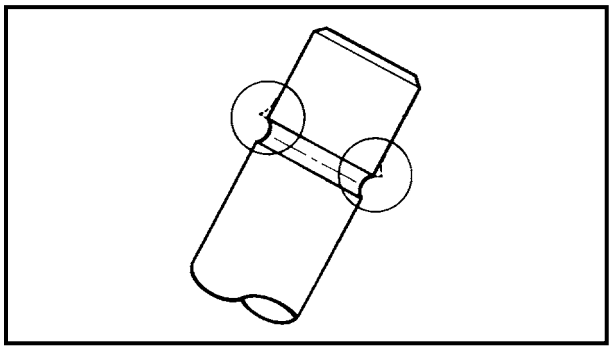

EAS00246
INSTALLING THE VALVES

The following procedure applies to all of the valves and related components.

1. Deburr:
   - valve stem end
     (with an oil stone)

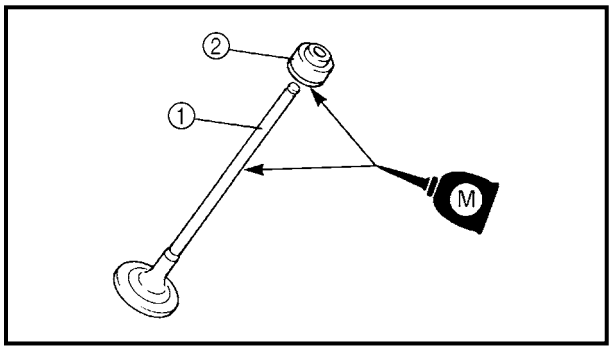

2. Lubricate:
   - valve stem ①
   - oil seal ②
     (with the recommended lubricant)

	Recommended lubricant **Molybdenum disulfide oil**

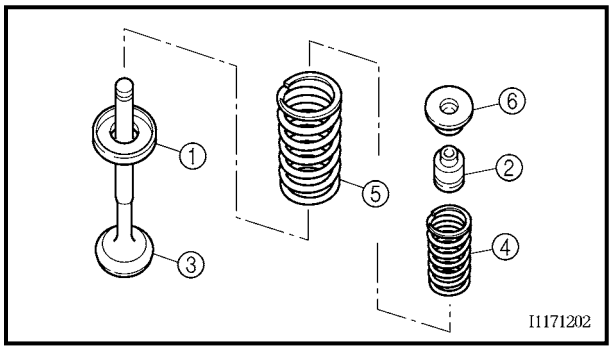

3. Install:
   - lower spring seat ①
   - oil seal ② New
   - valve ③
   - inner valve spring ④
   - outer valve spring ⑤
   - upper spring seat ⑥
     (into the cylinder head)

NOTE:
Install the valve springs with the larger pitch ⓐ facing up.

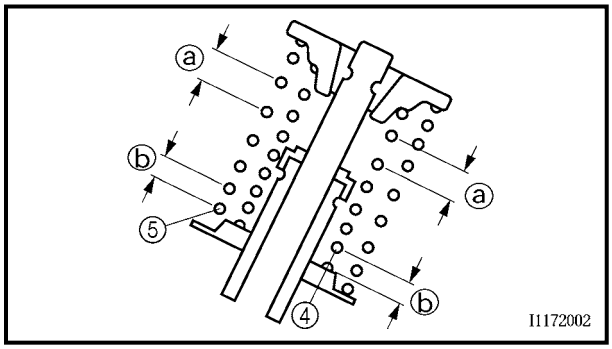

ⓑ Smaller pitch

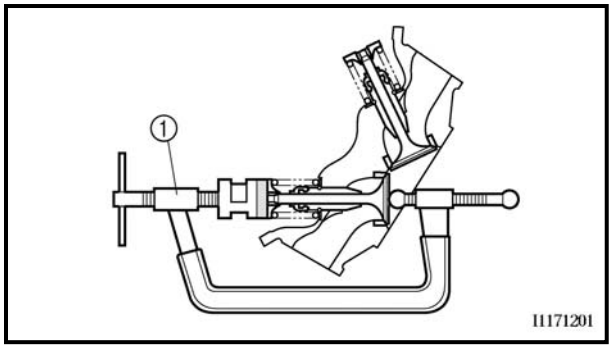

4. Install:
   - valve cotters

NOTE:
Install the valve cotters by compressing the valve springs with the valve spring compressor ①.

	Valve spring compressor **YM-04019**

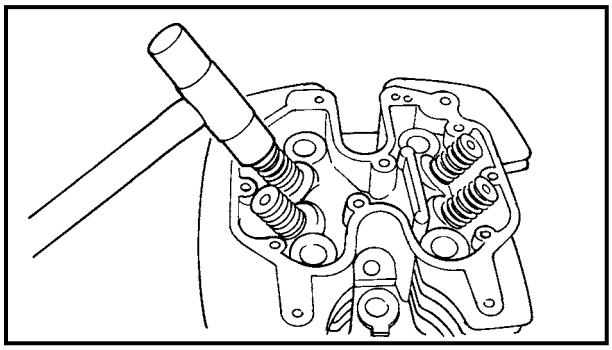

5. To secure the valve cotters onto the valve stem, lightly tap the valve tip with a soft-face hammer.

CAUTION:
Hitting the valve tip with excessive force could damage the valve.

6. Install:
   - cylinder head
     Refer to "CYLINDER HEADS".

EAS00251

CYLINDERS AND PISTONS

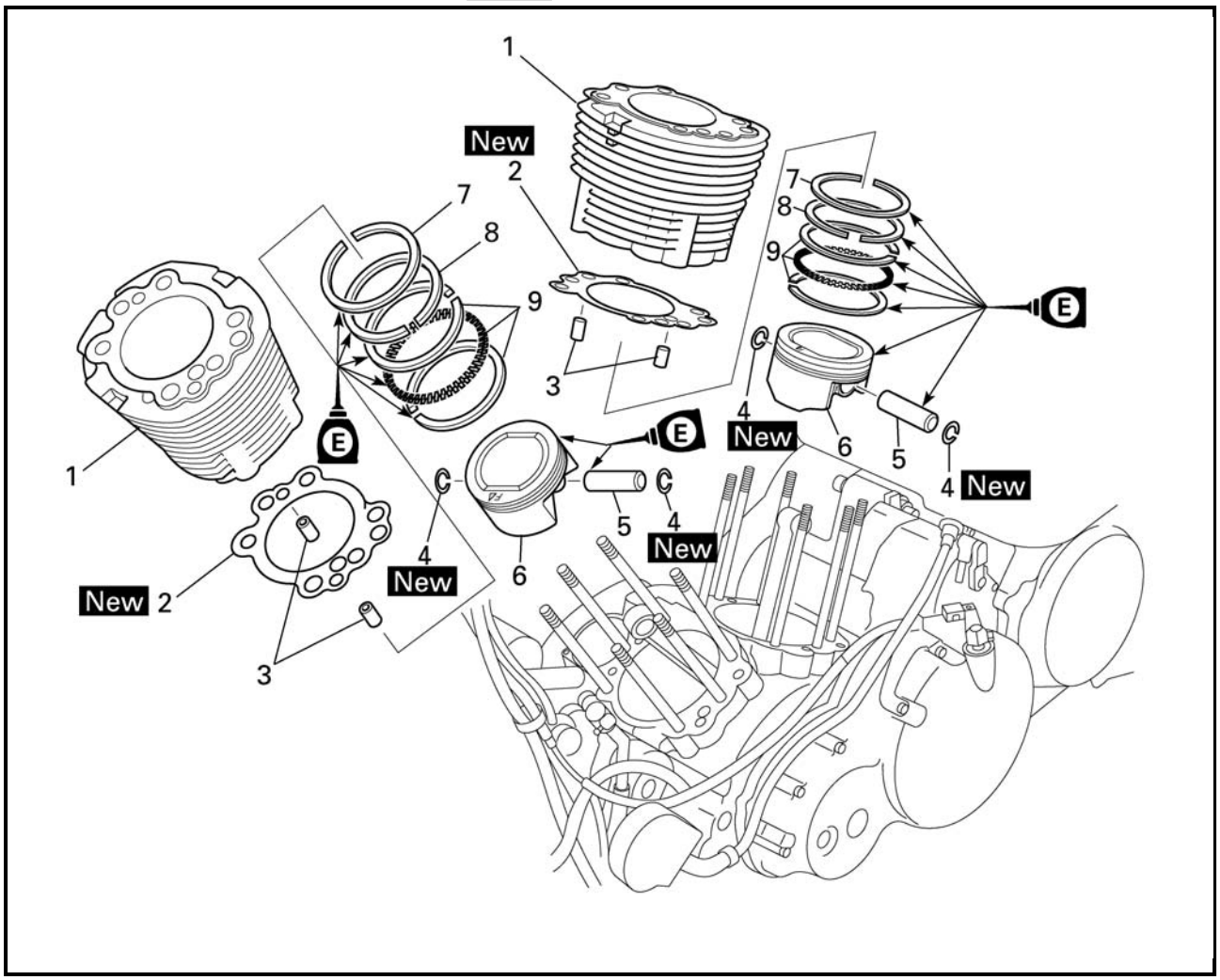

Order	Job/Part	Q'ty	Remarks
	Removing the cylinders and pistons		Remove the parts in the order listed.
	Cylinder heads		Refer to "CYLINDER HEAD".
1	Cylinder	2	
2	Cylinder gasket	2	
3	Dowel pin	4	
4	Piston pin clip	4	
5	Piston pin	2	
6	Piston	2	
7	Top ring	2	
8	2nd ring	2	
9	Oil ring	2	
			For installation, reverse the removal procedure.

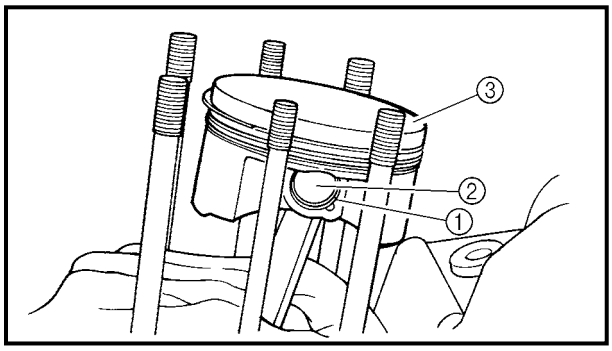

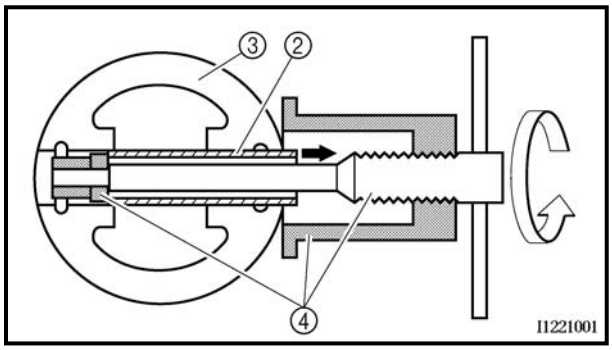

EAS00254
REMOVING THE CYLINDERS AND PISTONS

The following procedure applies to all of the cylinders and pistons.

1. Remove:
   - piston pin clip ①
   - piston pin ②
   - piston ③

CAUTION:

Do not use a hammer to drive the piston pin out.

NOTE:

- Before removing the piston pin clip, cover the crankcase opening with a clean rag to prevent the piston pin clip from falling into the crankcase.
- For reference during installation, put an identification mark on each piston crown.
- Before removing the piston pin, deburr the piston pin clip groove and the piston pin bore area. If both areas are deburred and the piston pin is still difficult to remove, remove it with the piston pin puller ④.

Piston pin puller
YU-01304

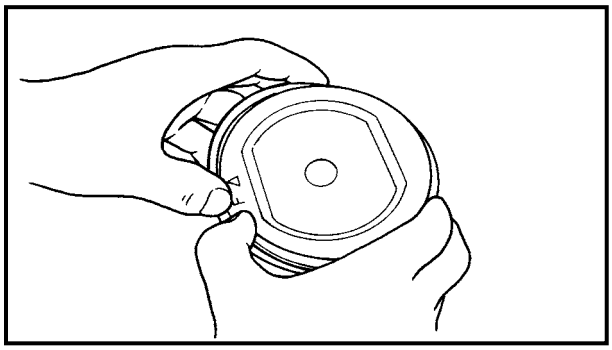

2. Remove:
   - top ring
   - 2nd ring
   - oil ring

NOTE:

When removing a piston ring, open the end gap with your fingers and lift the other side of the ring over the piston crown.

EAS00258
CHECKING THE CYLINDERS AND PISTONS

The following procedure applies to all of the cylinders and pistons.

1. Check:
   - piston wall
   - cylinder wall
     Vertical scratches → Replace the cylinder, and the piston and piston rings as a set.

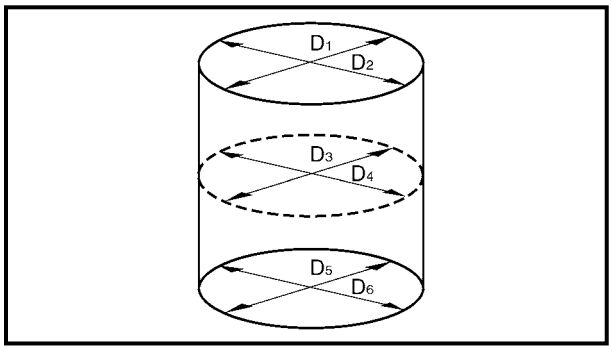

2. Measure:
   - piston-to-cylinder clearance

▼▼▼▼▼▼▼▼▼▼▼▼▼▼▼▼▼▼▼▼▼▼▼▼▼▼▼▼▼▼▼▼

a. Measure cylinder bore "C" with the cylinder bore gauge.

NOTE:

Measure cylinder bore "C" by taking side-to-side and front-to-back measurements of the cylinder. Then, find the average of the measurements.

	Cylinder bore gauge YU-03017

Cylinder bore "C"	**95.000 ~ 95.010 mm (3.7402 ~ 3.7406 in)**
Maximum taper "T"	**0.05 mm (0.0016 in)**
Out of round "R"	**0.05 mm (0.0016 in)**

"C" = maximum of D_1 ~ D_6
"T" = maximum of D_1 or D_2 – maximum of D_5 or D_6
"R" = maximum of D_1, D_3 or D_5 – minimum of D_2, D_4 or D_6

b. If out of specification, replace the cylinder, and the piston and piston rings as a set.

c. Measure piston skirt diameter "P" with the micrometer.

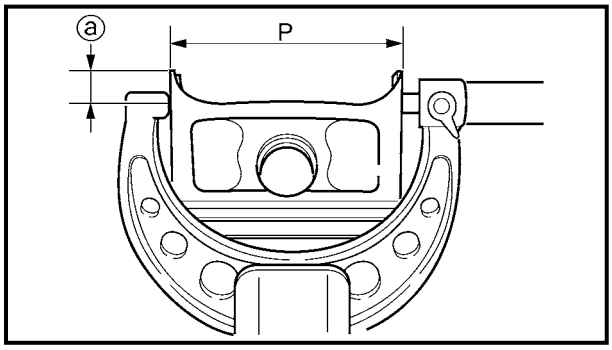

	Micrometer YU-03009

ⓐ 5 mm (0.20 in) from the bottom edge of the piston

	Piston size "P"
Standard	**94.960 ~ 94.975 mm (3.7386 ~ 3.7392 in)**

d. If out of specification, replace the piston and piston rings as a set.

e. Calculate the piston-to-cylinder clearance with the following formula.

Piston-to-cylinder clearance = Cylinder bore "C" – Piston skirt diameter "P"

Piston-to-cylinder clearance
0.025 ~ 0.050 mm
(0.001 ~ 0.002 in)
<Limit>: 0.15 mm (0.006 in)

f. If out of specification, replace the cylinder, and the piston and piston rings as a set.

▲▲▲▲▲▲▲▲▲▲▲▲▲▲▲▲▲▲▲▲▲▲▲▲▲▲▲▲

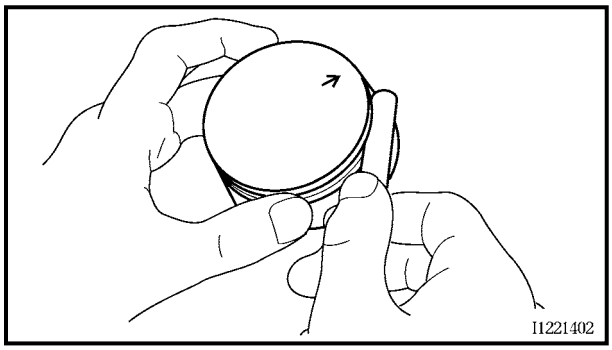

EAS00263
CHECKING THE PISTON RINGS

1. Measure:
   - piston ring side clearance
     Out of specification → Replace the piston and piston rings as a set.

NOTE:
Before measuring the piston ring side clearance, eliminate any carbon deposits from the piston ring grooves and piston rings.

Piston ring side clearance
Top ring
0.03 ~ 0.08 mm
(0.0012 ~ 0.0031 in)
<Limit>: 0.12 mm (0.0047 in)
2nd ring
0.03 ~ 0.07 mm
(0.0012 ~ 0.0028 in)
<Limit>: 0.12 mm (0.0047 in)

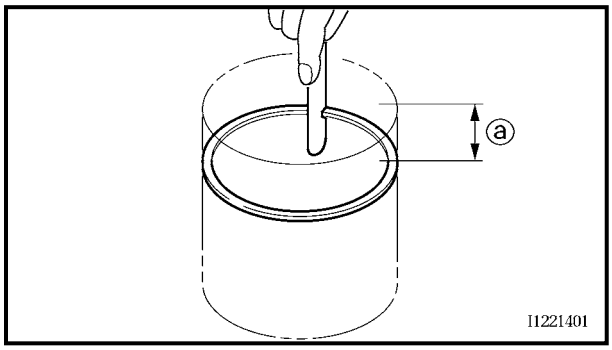

2. Install:
   - piston ring
     (into the cylinder)

NOTE:
Level the piston ring in the cylinder with the piston crown.

ⓐ 10 mm (0.39 in)

3. Measure:
   - piston ring end gap
     Out of specification → Replace the piston ring.

NOTE:
The oil ring expander spacer's end gap cannot be measured. If the oil ring rail's gap is excessive, replace all three piston rings.

Piston ring end gap
Top ring
0.30 ~ 0.45 mm (0.012 ~ 0.018 in)
<Limit>: 0.65 mm (0.026 in)
2nd ring
0.30 ~ 0.45 mm (0.012 ~ 0.018 in)
<Limit>: 0.80 mm (0.031 in)
Oil ring
0.2 ~ 0.7 mm (0.008 ~ 0.028 in)

EAS00266
CHECKING THE PISTON PINS

The following procedure applies to all of the piston pins.

1. Check:
   - piston pin
     Blue discoloration/grooves → Replace the piston pin and then check the lubrication system.

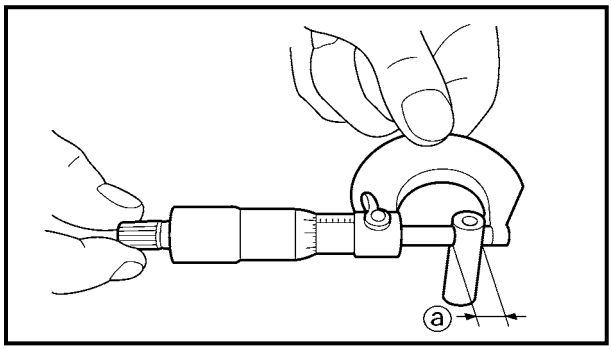

2. Measure:
   - piston pin outside diameter ⓐ
     Out of specification → Replace the piston pin.

Piston pin outside diameter
21.991 ~ 22.000 mm
(0.8658 ~ 0.8661 in)
<Limit>: 21.971 mm (0.8650 in)

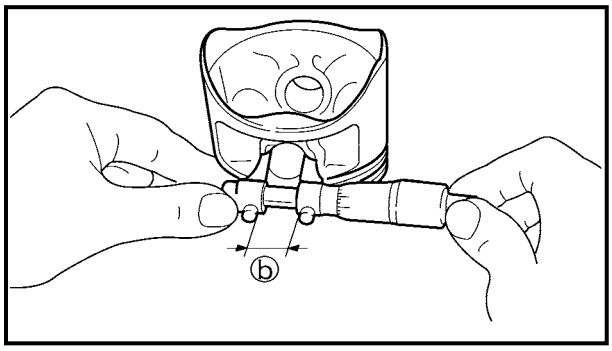

3. Measure:
   - piston pin bore diameter (in the piston) ⓑ
     Out of specification → Replace the piston pin.

Piston pin bore diameter (in the piston)
22.004 ~ 22.015 mm
(0.8663 ~ 0.8667 in)
<Limit>: 22.045 mm (0.8679 in)

4. Calculate:
   - piston pin-to-piston pin bore clearance
     Out of specification → Replace the piston pin.

Piston pin-to-piston pin bore clearance = Piston pin bore diameter (in the piston) ⓑ – Piston pin outside diameter ⓐ

Piston pin-to-piston pin bore clearance
0.004 ~ 0.024 mm
(0.00016 ~ 0.00094 in)
<Limit>: 0.074 mm (0.0029 in)

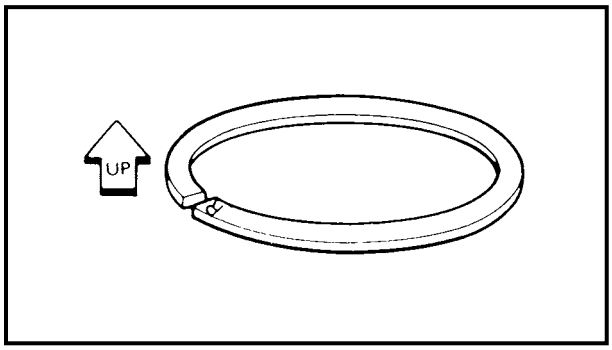

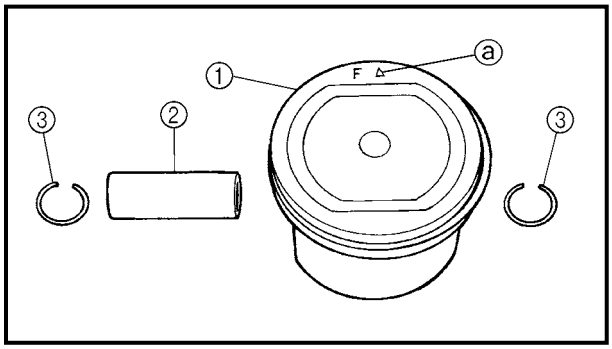

EAS00268
INSTALLING THE PISTONS AND CYLINDERS

The following procedure applies to all of the pistons and cylinders.

1. Install:
   - top ring
   - 2nd ring
   - lower oil ring rail
   - upper oil ring rail
   - oil ring expander

NOTE:
Be sure to install the piston rings so that the manufacturer's marks or numbers face up.

2. Install:
   - piston ①
   - piston pin ②
   - piston pin clip ③ New

NOTE:
- Apply engine oil onto the piston pin.
- Make sure the "arrow" mark ⓐ on the piston faces towards the front of the motorcycle.
- Before installing the piston pin clip, cover the crankcase opening with a clean rag to prevent the clip from falling into the crankcase.

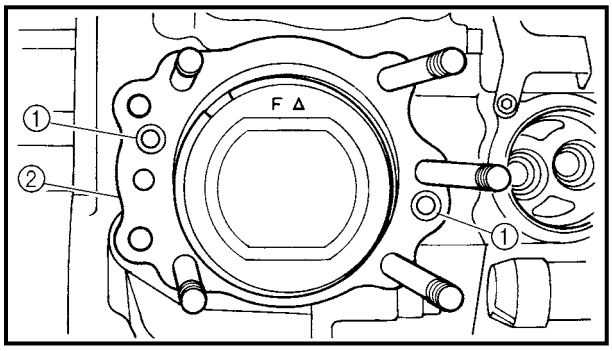

3. Install:
   - dowel pins ①
   - gasket ② New

4. Lubricate:
   - piston
   - piston rings
   - cylinder
     (with the recommended lubricant)

	Recommended lubricant **Engine oil**

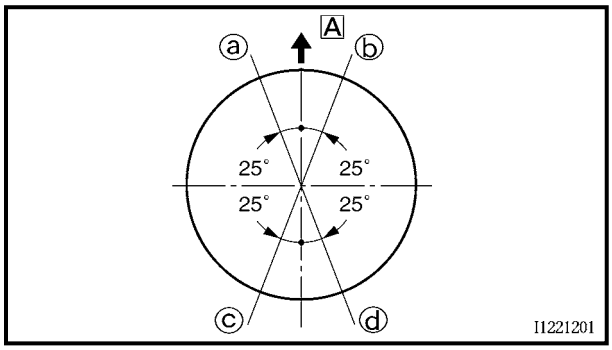

5. Offset:
   - piston ring end gaps

ⓐTop ring
ⓑLower oil ring rail
ⓒUpper oil ring rail
ⓓ2nd ring
AFront of the motorcycle

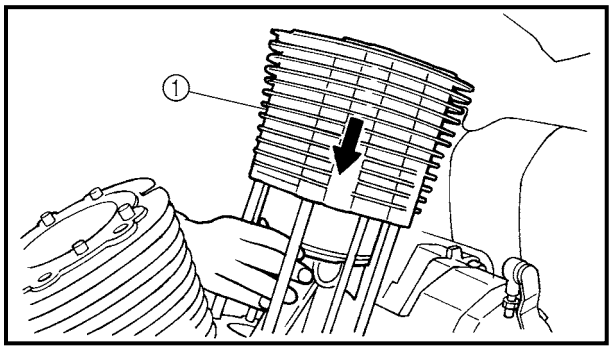

6. Install:
   - cylinder ①

NOTE:
While compressing the piston rings with one hand, install the cylinder with the other hand.

EAS00273
CLUTCH

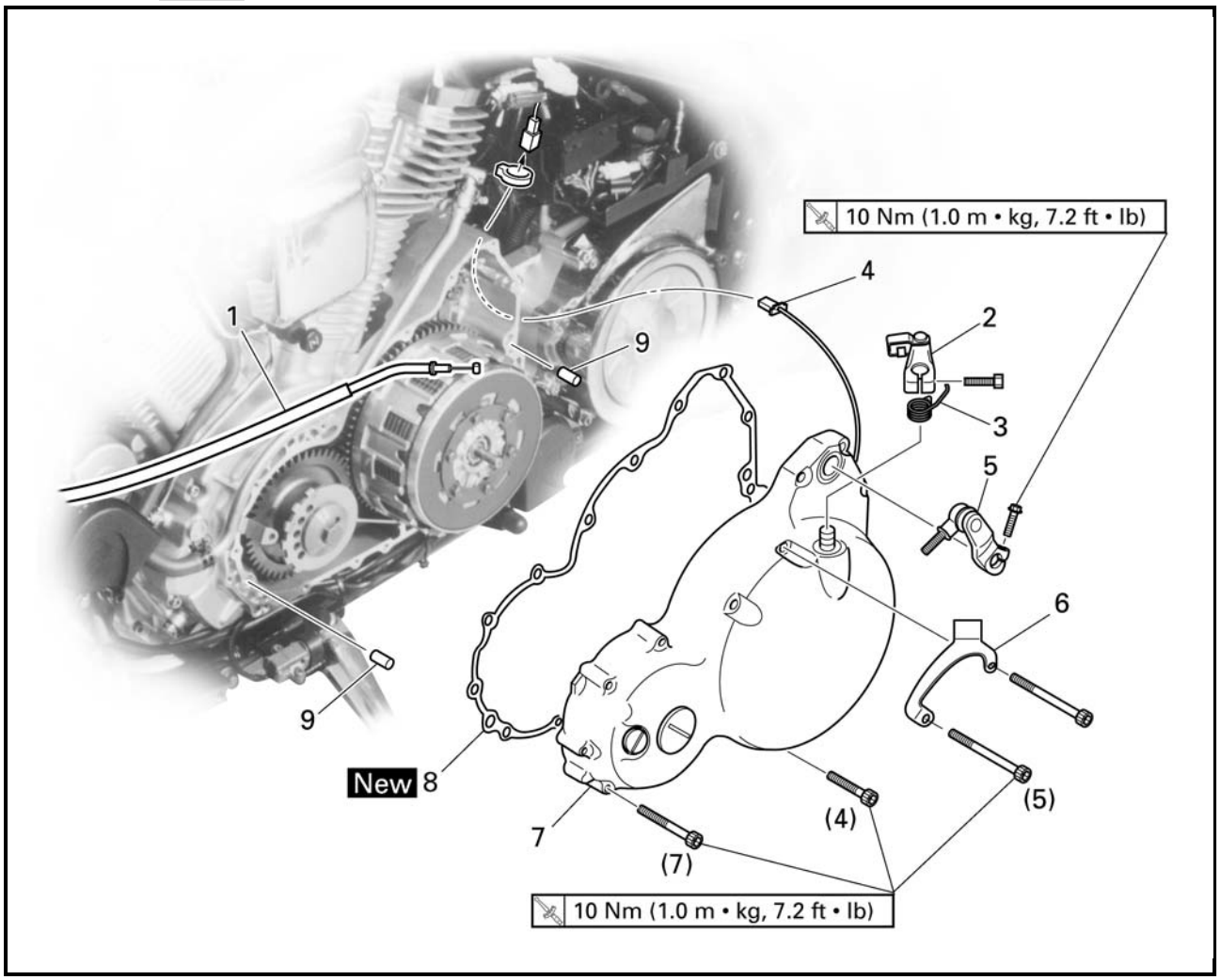

Order	Job/Part	Q'ty	Remarks
	Removing the clutch cover		Remove the parts in the order listed.
	Left side cover		Refer to "SEATS AND SIDE COVERS" in chapter 3.
	Engine left side cover		Refer to "ROCKER ARMS, PUSH RODS AND VALVE LIFTERS".
	Engine oil		Drain.
1	Clutch cable	1	Disconnect.
2	Pull lever	1	
3	Pull lever spring	1	
4	Pickup coil coupler	1	Disconnect.
5	Shift arm	1	
6	Clutch cable holder	1	
7	Clutch cover	1	

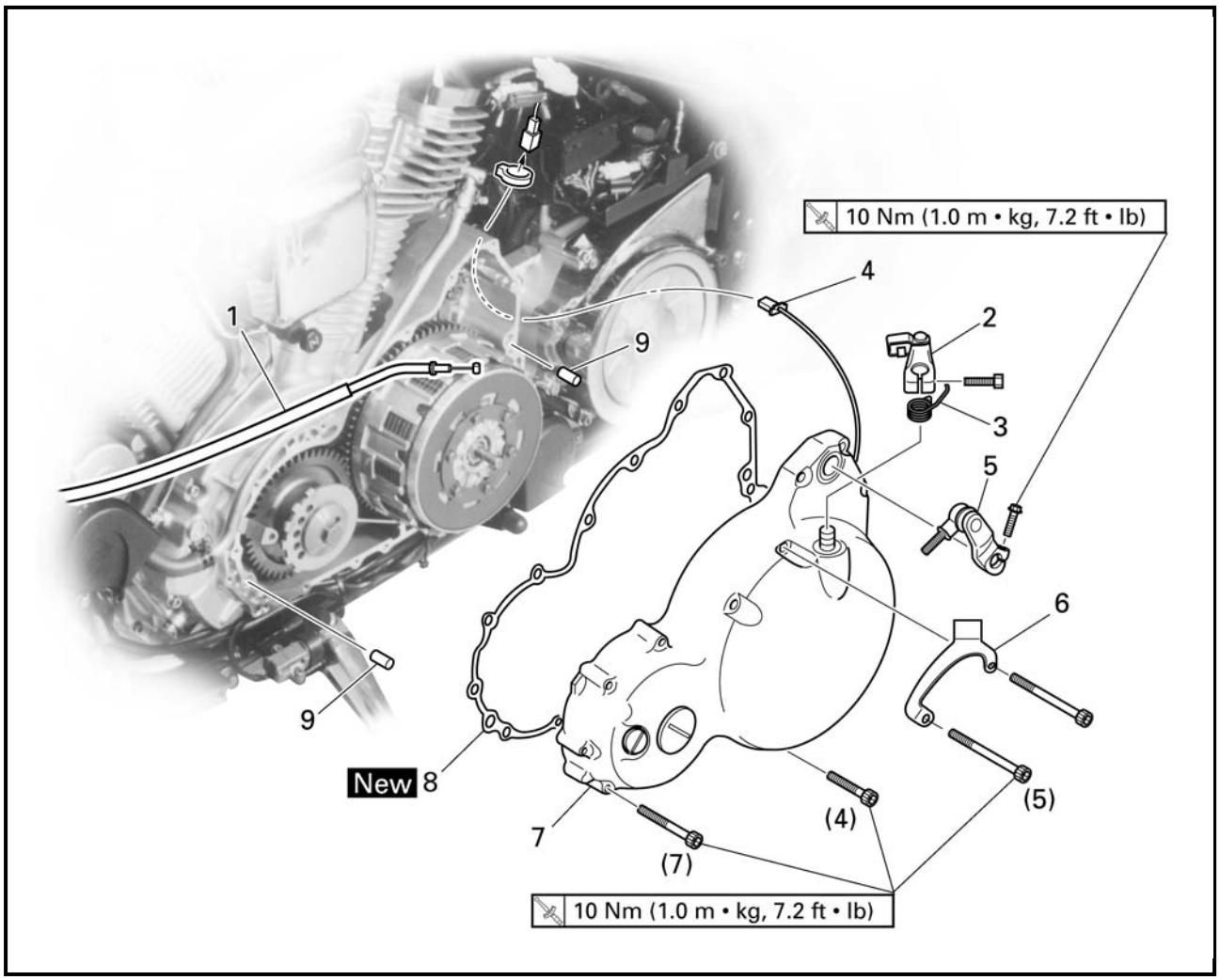

Order	Job/Part	Q'ty	Remarks
8	Clutch cover gasket	1	
9	Dowel pin	1	
			For installation, reverse the removal procedure.

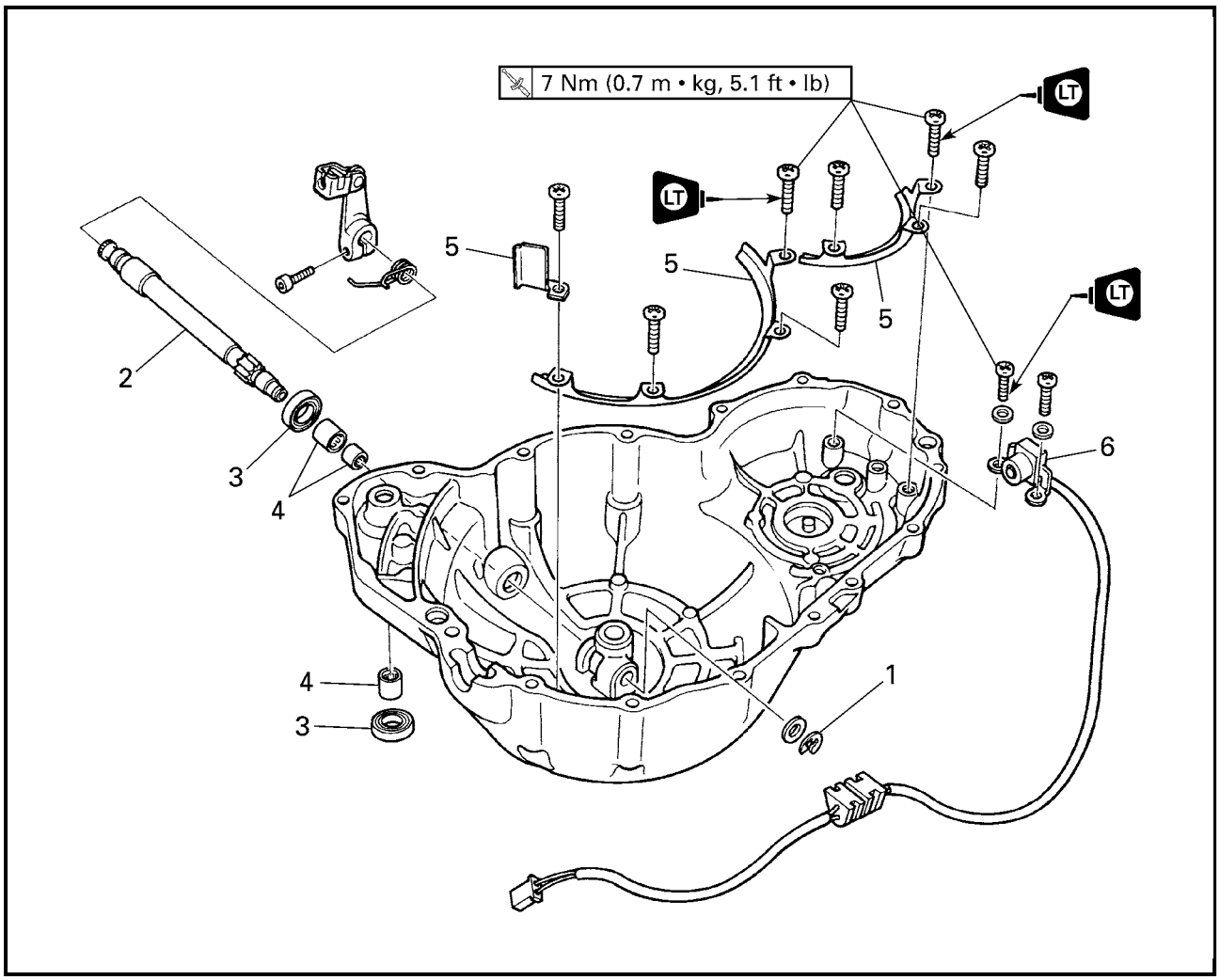

Order	Job/Part	Q'ty	Remarks
	Removing the pull lever shaft and pickup coil		Remove the parts in the order listed.
	Pull lever	1	
	Pull lever spring	1	
1	Circlip	1	
2	Pull lever shaft	1	
3	Oil seal	2	
4	Bearing	3	
5	Pickup coil lead holder	3	
6	Pickup coil	1	
			For installation, reverse the removal procedure.

EAS00274

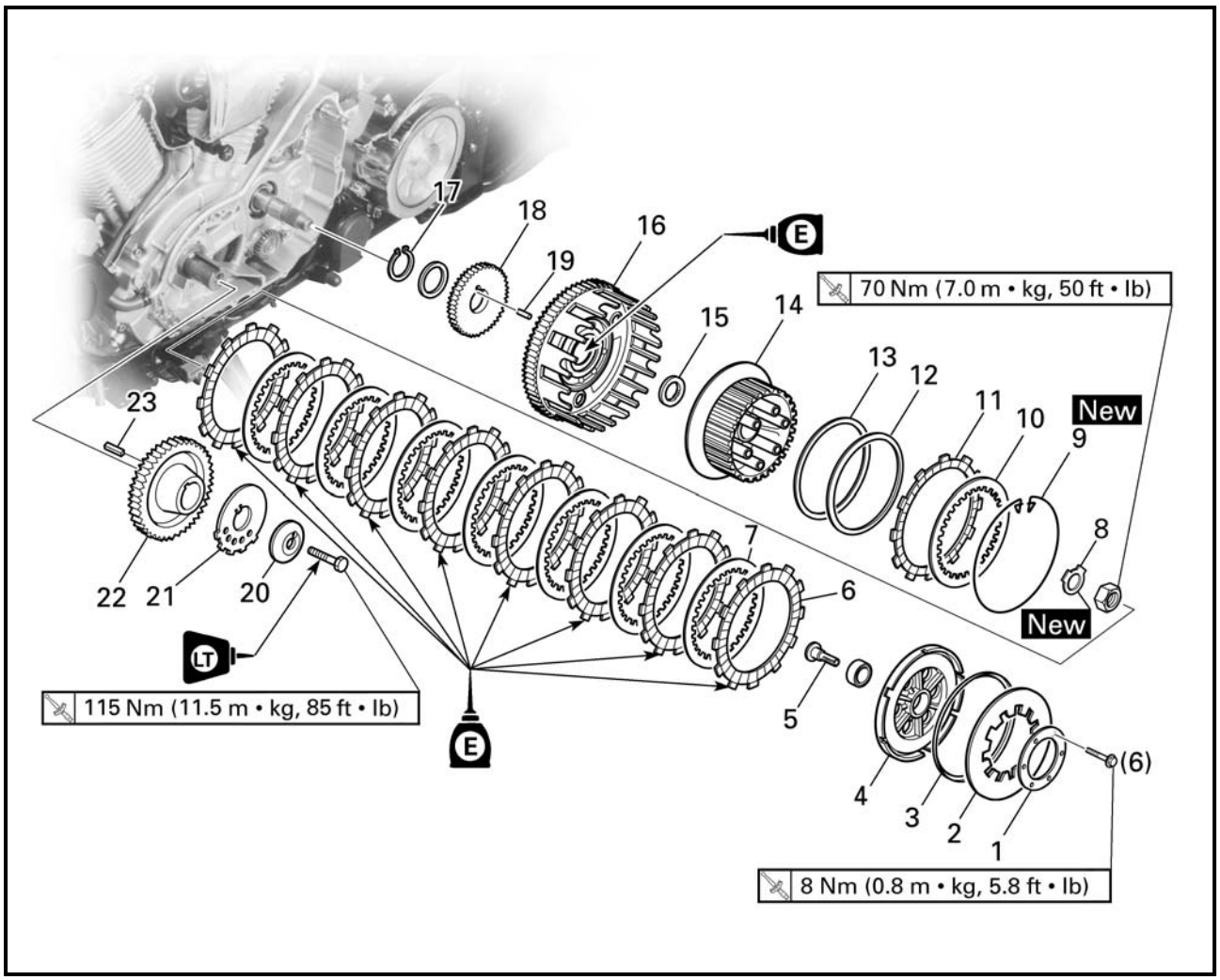

Order	Job/Part	Q'ty	Remarks
	Removing the clutch		Remove the parts in the order listed.
	Generator rotor cover		Refer to "GENERATOR".
1	Clutch spring plate retainer	1	
2	Clutch spring plate	1	
3	Clutch spring plate seat	1	
4	Pressure plate	1	
5	Pull rod	1	
6	Friction plate	7	
7	Clutch plate	6	
8	Lock washer	1	
9	Wire circlip	1	
10	Clutch plate	1	
11	Friction plate	1	
12	Clutch damper spring	1	

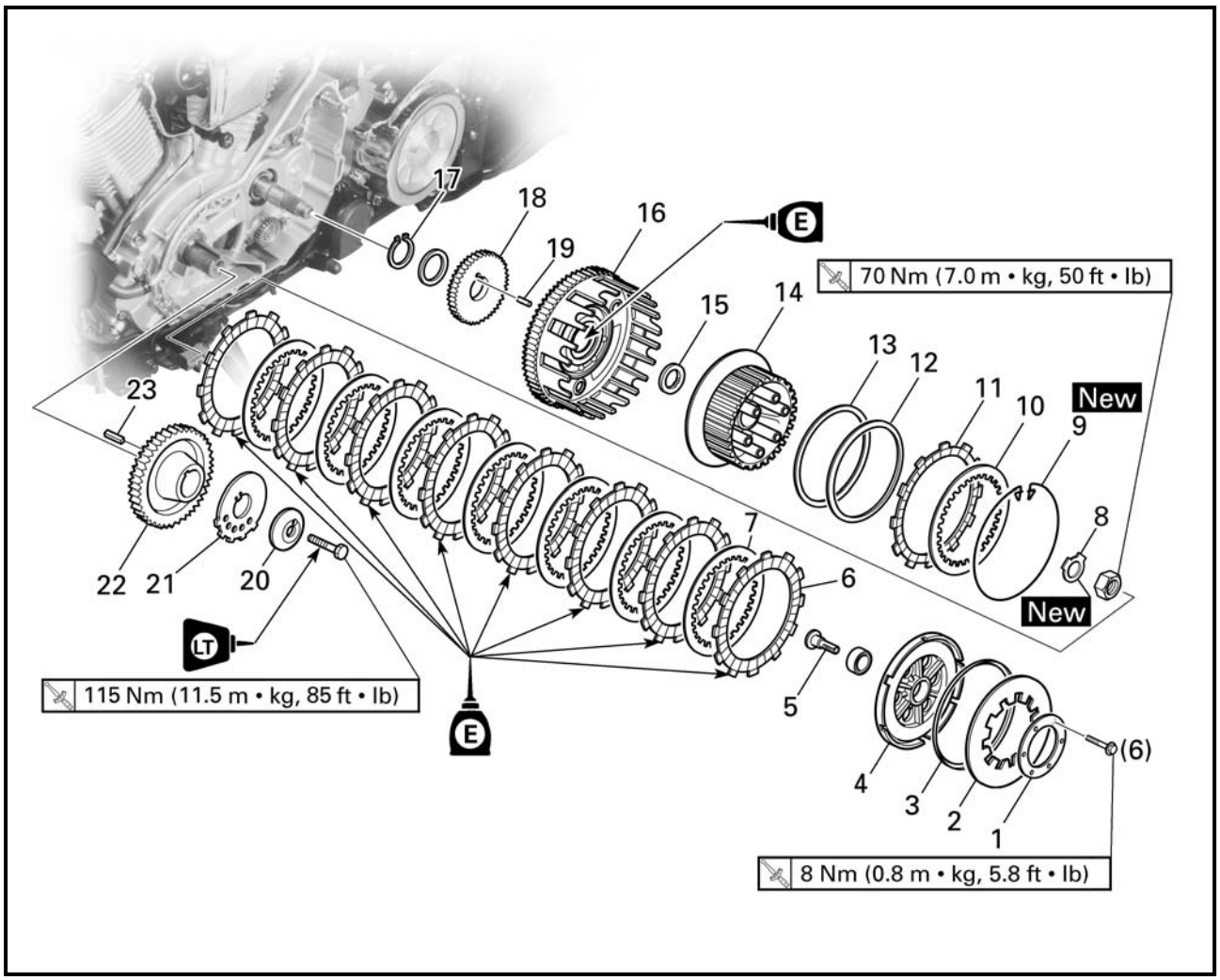

Order	Job/Part	Q'ty	Remarks
13	Clutch damper spring seat	1	
14	Clutch boss	1	
15	Thrust washer	1	
16	Clutch housing	1	
17	Circlip	1	
18	Oil pump drive gear	1	
19	Dowel pin	1	
20	Spacer	1	
21	Pickup coil rotor	1	
22	Primary drive gear	1	
23	Straight key	1	
			For installation, reverse the removal procedure.

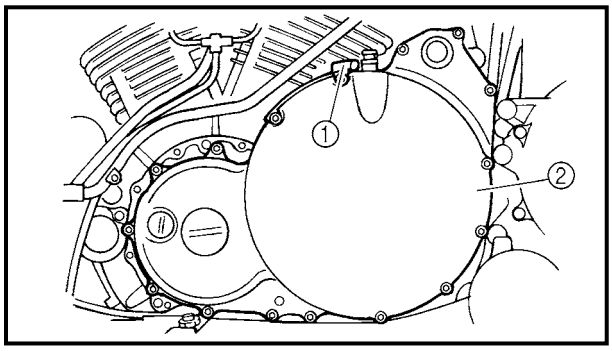

EAS00277
REMOVING THE CLUTCH

1. Remove:
   - clutch cable holder ①
   - clutch cover ②

NOTE:
Loosen each bolt 1/4 of a turn at a time, in stages and in a crisscross pattern. After all of the bolts are fully loosened, remove them.

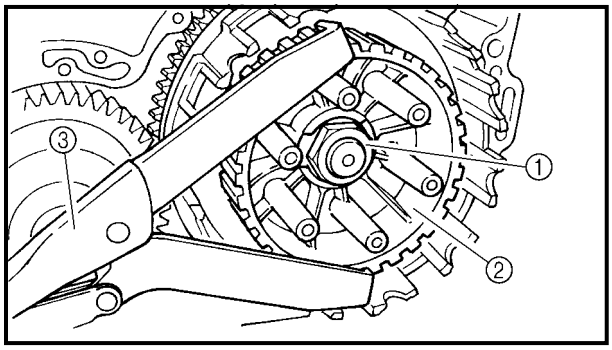

2. Straighten the lock washer tab.
3. Loosen:
   - clutch boss nut ①

NOTE:
While holding the clutch boss ② with the universal clutch holder ③, loosen the clutch boss nut.

Universal clutch holder
YM-91042

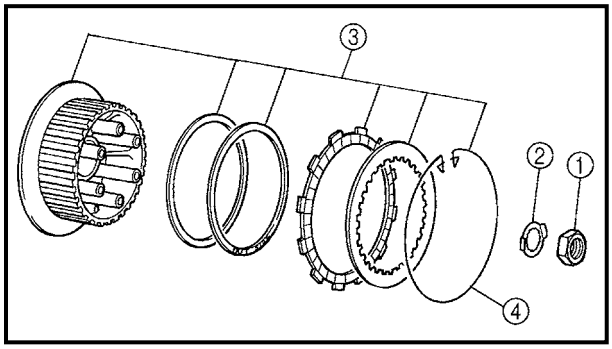

4. Remove:
   - clutch boss nut ①
   - lock washer ②
   - clutch boss assembly ③

NOTE:
There is a built-in damper between the clutch boss and the clutch plate. It is not necessary to remove the wire circlip ④ and disassemble the built-in damper unless there is serious clutch chattering.

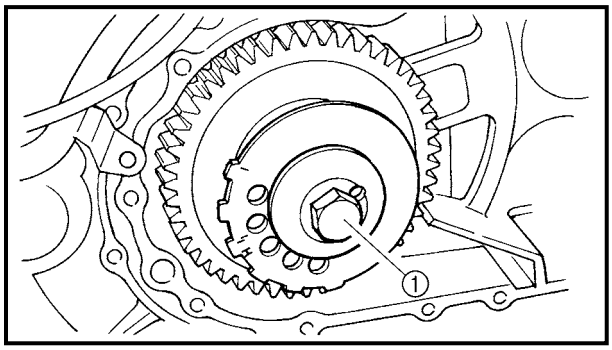

EAS00279
REMOVING THE PRIMARY DRIVE GEAR

1. Remove:
   - pickup coil rotor bolt ①

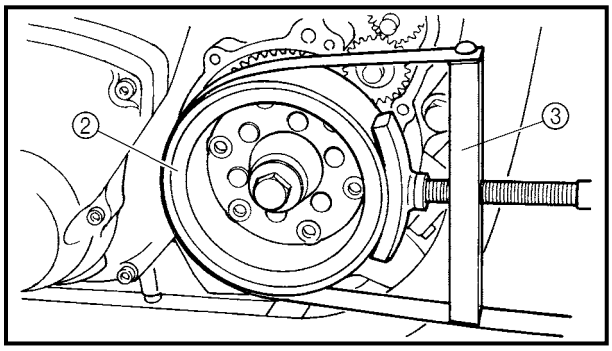

NOTE:

While holding the generator rotor ② with the sheave holder ③, loosen the pickup coil rotor bolt.

Sheave holder
YS-01880

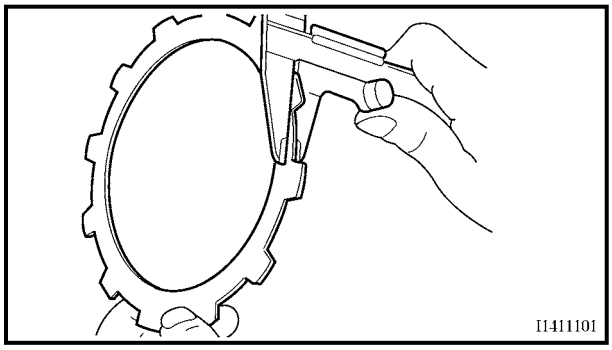

EAS00280

CHECKING THE FRICTION PLATES

The following procedure applies to all of the friction plates.

1. Check:
   - friction plate
     Damage/wear → Replace the friction plates as a set.
2. Measure:
   - friction plate thickness
     Out of specification → Replace the friction plates as a set.

NOTE:

Measure the friction plate at four places.

Friction plate thickness
2.9 ~ 3.1 mm (0.114 ~ 0.122 in)
<Limit>: 2.8 mm (0.110 in)

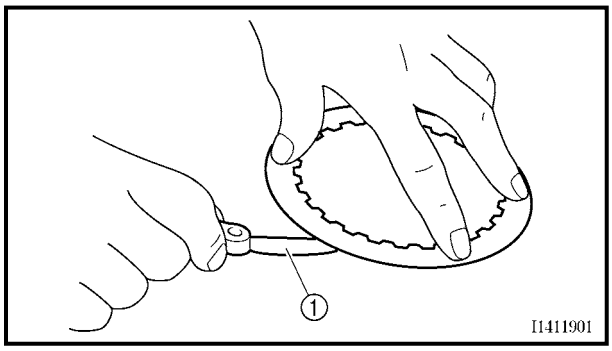

EAS00281

CHECKING THE CLUTCH PLATES

The following procedure applies to all of the clutch plates.

1. Check:
   - clutch plate
     Damage → Replace the clutch plates as a set.
2. Measure:
   - clutch plate warpage
     (with a surface plate and thickness gauge ①)
     Out of specification → Replace the clutch plates as a set.

Maximum clutch plate warpage
0.2 mm (0.008 in)

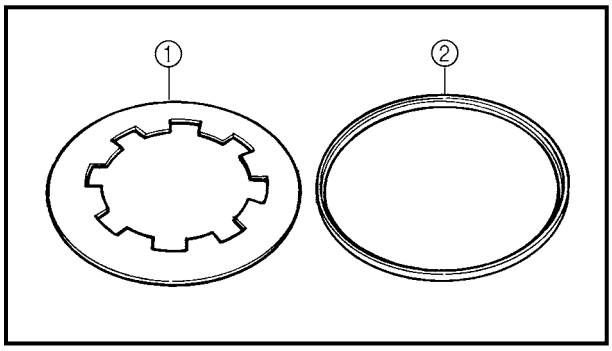

EAS00283
CHECKING THE CLUTCH SPRING PLATE

1. Check:
   - clutch spring plate ①
     Damage → Replace.
2. Check:
   - clutch spring plate seat ②
     Damage → Replace.

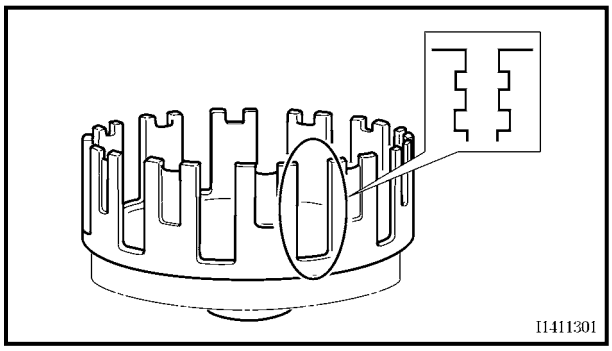

EAS00284
CHECKING THE CLUTCH HOUSING

1. Check:
   - clutch housing dogs
     Damage/pitting/wear → Deburr the clutch housing dogs or replace the clutch housing.

NOTE:
Pitting on the clutch housing dogs will cause erratic clutch operation.

2. Check:
   - bearing
     Damage/wear → Replace the bearing and clutch housing.

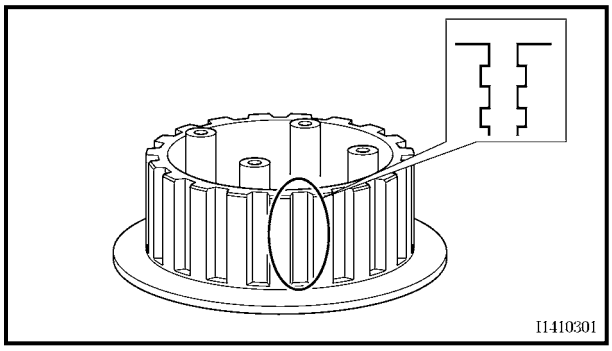

EAS00285
CHECKING THE CLUTCH BOSS

1. Check:
   - clutch boss splines
     Damage/pitting/wear → Replace the clutch boss.

NOTE:
Pitting on the clutch boss splines will cause erratic clutch operation.

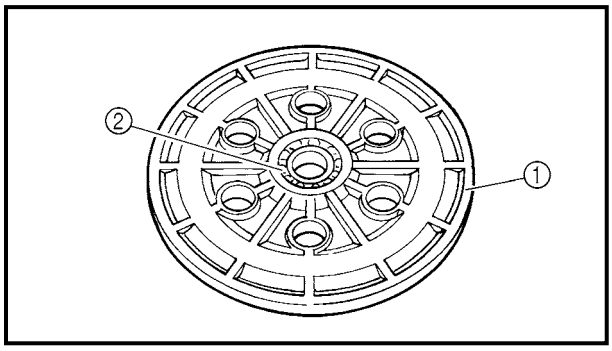

EAS00286
CHECKING THE PRESSURE PLATE

1. Check:
   - pressure plate ①
     Cracks/damage → Replace.
   - bearing ②
     Damage/wear → Replace.

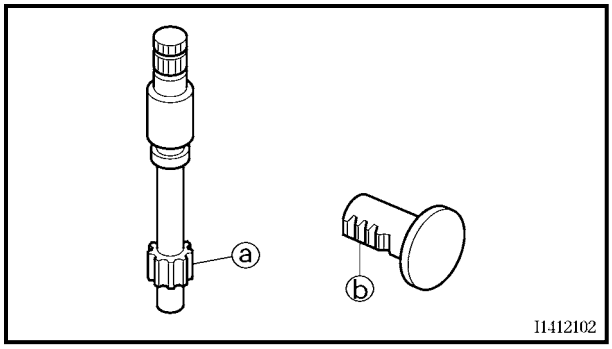

EAS00287
CHECKING THE PULL LEVER SHAFT AND PULL ROD

1. Check:
   - pull lever shaft pinion gear teeth ⓐ
   - pull rod teeth ⓑ
     Damage/wear → Replace the pull lever shaft and pull rod as a set.
2. Check:
   - pull rod bearing
     Damage/wear → Replace.

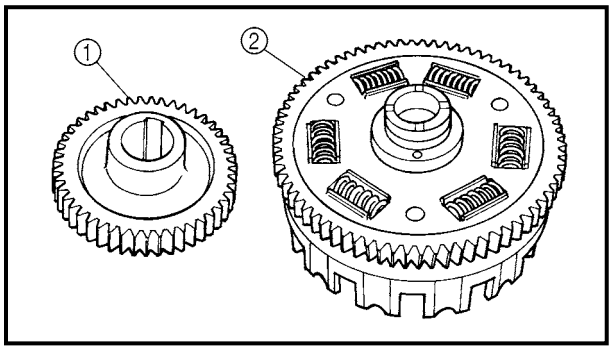

EAS00292
CHECKING THE PRIMARY DRIVE

1. Check:
   - primary drive gear ①
   - primary driven gear ②
     Damage/wear → Replace the primary drive gear and clutch housing as a set.
     Excessive noise during operation → Replace the primary drive gear and clutch housing as a set.

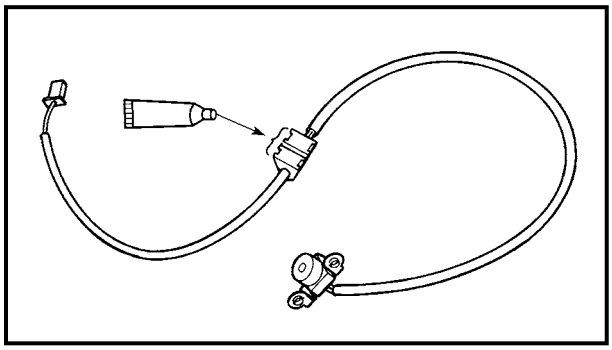

INSTALLING THE PICKUP COIL AND PULL LEVER SHAFT

1. Apply:
   - sealant
     (onto the pickup coil lead grommet)

	Quick Gasket® **ACC-11001-05-01**

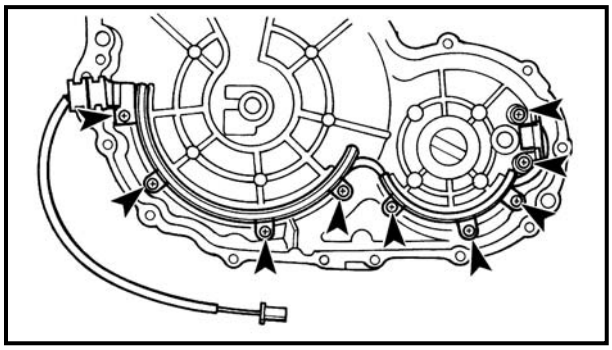

2. Install:
   - pickup coil — **7 Nm (0.7 m · kg, 5.1 ft · lb)**
   - pickup coil lead holder — **7 Nm (0.7 m · kg, 5.1 ft · lb)**

NOTE:
Apply locking agent (LOCTITE®) to the threads of the pickup coil bolts and pickup coil lead holder bolts.

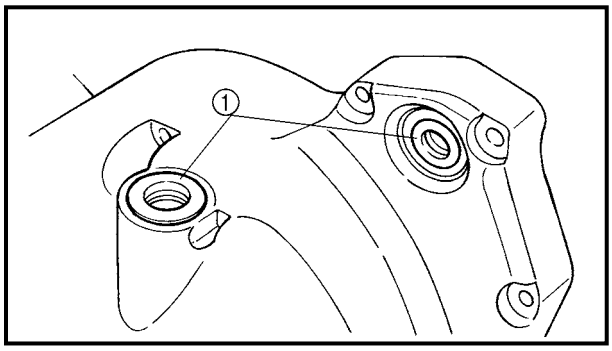

3. Install:
   - bearings
   - oil seals ①

NOTE:
Lubricate the oil seal lips with lithium soap base grease.

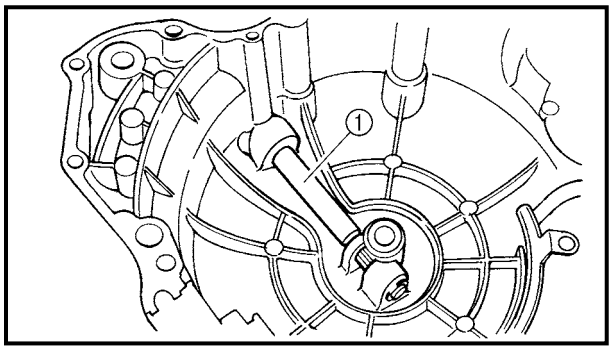

4. Install:
   - pull lever shaft ①
   - washer
   - circlip

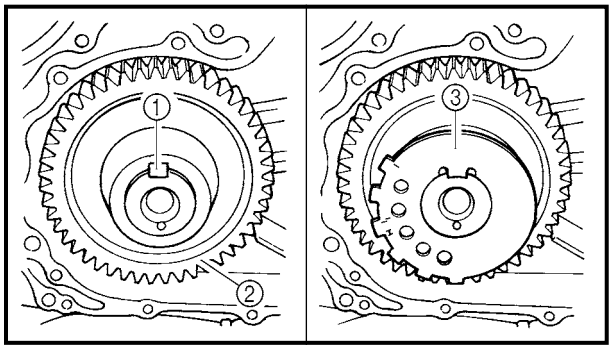

EAS00303
INSTALLING THE PRIMARY DRIVE GEAR

1. Install:
   - straight key ①
   - primary drive gear ②
   - pickup coil rotor ③
   - spacer ④
   - pickup coil rotor bolt ⑤

	115 Nm (11.5 m · kg, 85 ft · lb)

CAUTION:
The timing marks on the pickup coil rotor must face outside.

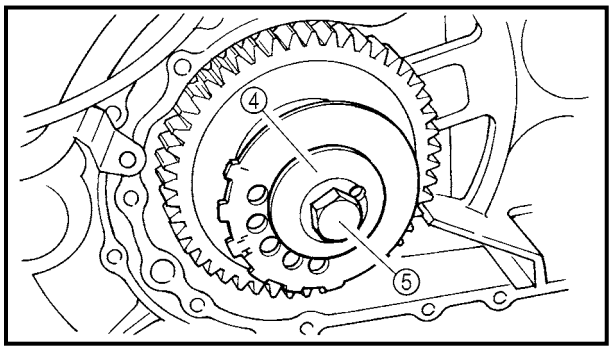

NOTE:
- Apply locking agent (LOCTITE®) to the threads of the pickup coil rotor bolt.
- While holding the generator rotor ⑥ with the sheave holder ⑦, tighten the pickup coil rotor bolt.

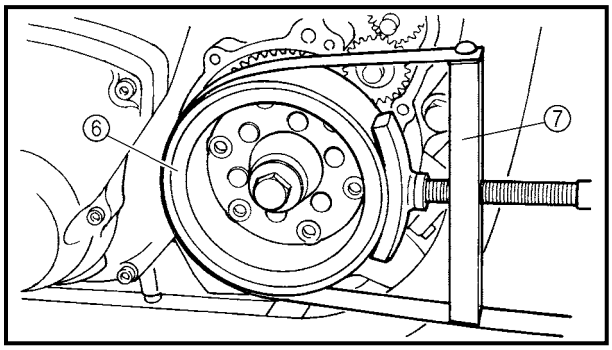

	Sheave holder **YS-01880**

2. Bend the lock washer tab along a flat side of the nut.

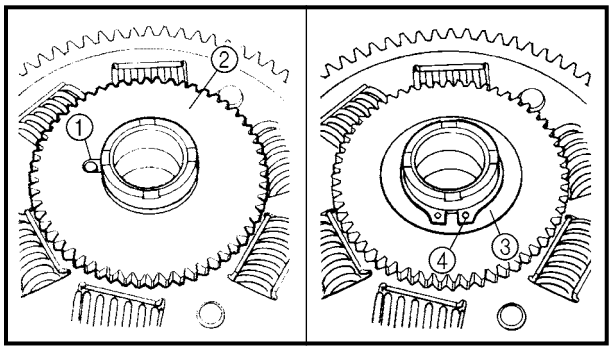

EAS00296
INSTALLING THE CLUTCH

1. Install:
   - dowel pin ①
   - oil pump drive gear ②
   - plate ③
   - circlip ④

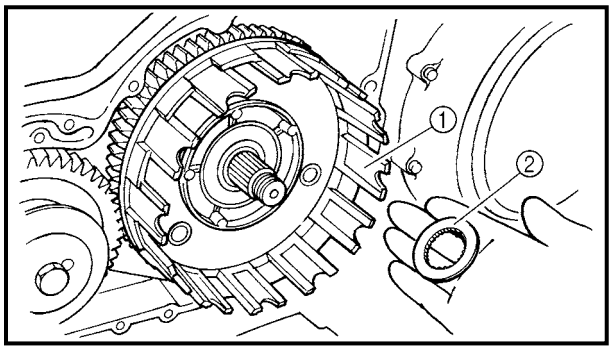

2. Install:
   - clutch housing ①
   - thrust washer ②

NOTE:
- Lubricate the clutch housing bearings with engine oil.
- Make sure that the primary driven gear teeth and primary drive gear teeth mesh correctly.
- Make sure that the oil pump drive gear teeth and oil pump driven gear teeth mesh correctly.

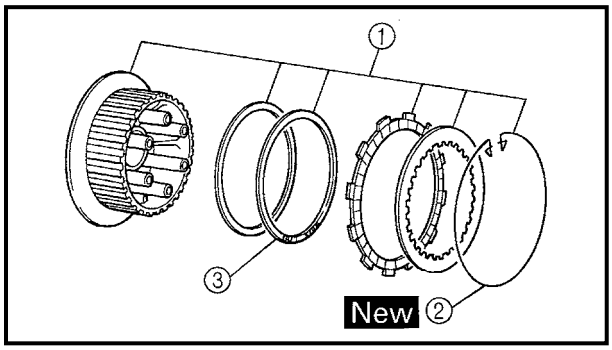

3. Install:
   - clutch boss assembly ①

NOTE:
- If the wire circlip ② has been removed, carefully install a new one.
- Install the clutch damper spring ③ with the "OUTSIDE" mark facing out.

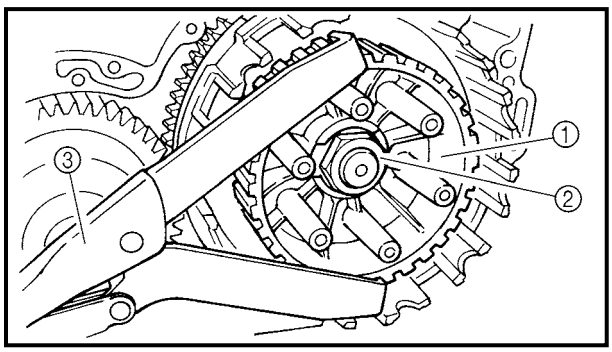

4. Install:
   - clutch boss ①
   - lock washer New
   - clutch boss nut ②

	70 Nm (7.0 m · kg, 50 ft · lb)

NOTE:
While holding the clutch boss with the universal clutch holder ③, tighten the clutch boss nut.

Universal clutch holder
YM-91042

5. Bend the lock washer tab along a flat side of the nut.
6. Lubricate:
   - friction plates
   - clutch plates
   (with the recommended lubricant)

Recommended lubricant
Engine oil

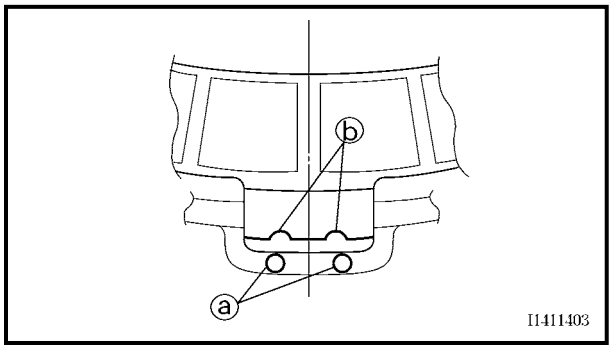

7. Install:
   - friction plates
   - clutch plates

NOTE:
- First, install a friction plate and then alternate between a clutch plate and a friction plate.
- Align the two embossed mark ⓐ on the clutch housing with the two semicircular slots ⓑ in the friction plates.

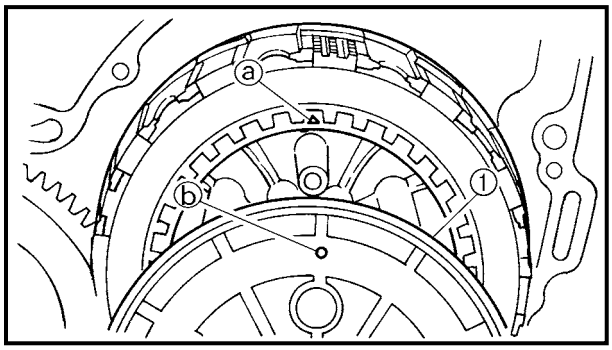

8. Install:
   - pressure plate ①

NOTE:
Align the punch mark ⓐ on the pressure plate with the punch mark ⓑ on the clutch boss.

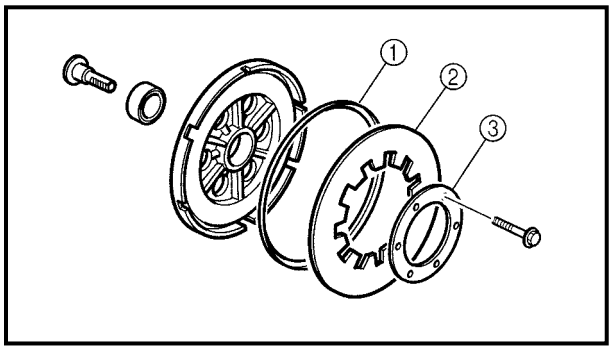

9. Install:
- clutch spring plate seat ①
- clutch spring plate ②
- clutch spring plate retainer ③

8 Nm (0.8 m · kg, 5.8 ft · lb)

NOTE:
Tighten the clutch spring plate retainer bolts in stages and in a crisscross pattern.

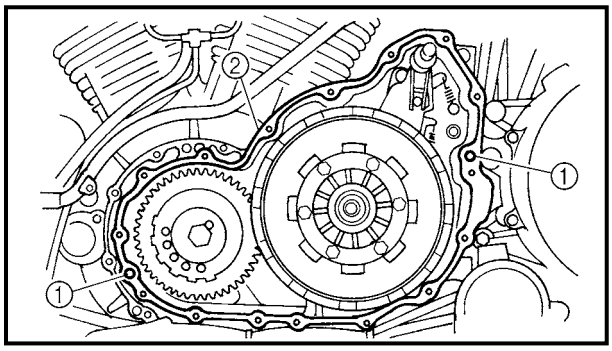

10. Install:
- dowel pins ①
- clutch cover gasket ② New

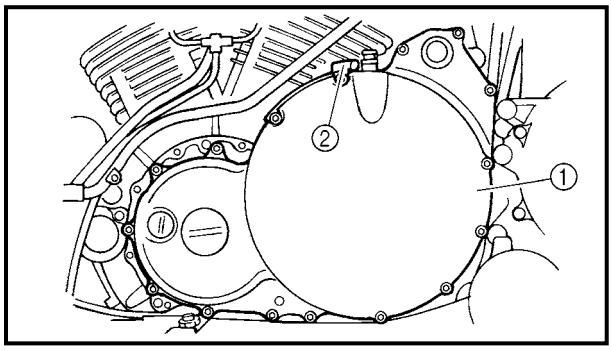

11. Install:
- clutch cover ①
- clutch cable holder ②

10 Nm (1.0 m · kg, 7.2 ft · lb)

NOTE:
Tighten the clutch cover bolts in stages and in a crisscross pattern.

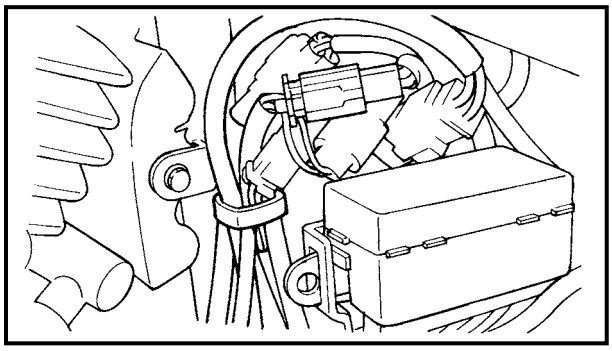

12. Connect:
- pickup coil coupler

NOTE:
Refer to "CABLE ROUTING" in chapter 2.

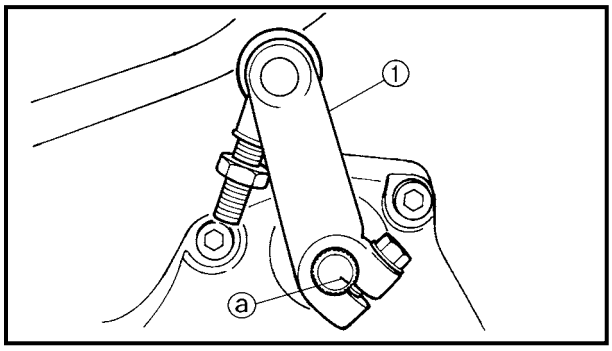

13. Install:
- shift arm ① **10 Nm (1.0 m · kg, 7.2 ft · lb)**

NOTE:
Align the mark ⓐ in the shift shaft with the slot in the shift arm.

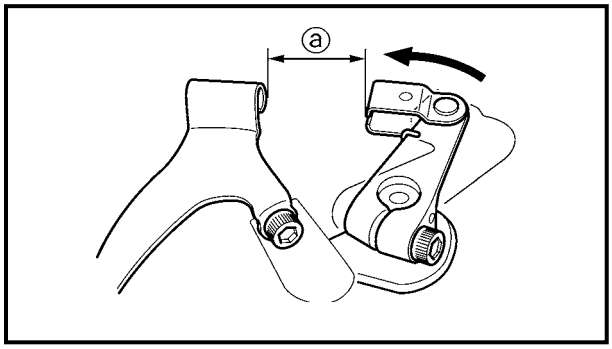

14.Install:
- pull lever spring
- pull lever

NOTE:
If there is no free play in the clutch, install the pull lever to the pull lever shaft in order to get the distance ⓐ between the pull lever and clutch cable holder to 31.8 mm (1.25 in).

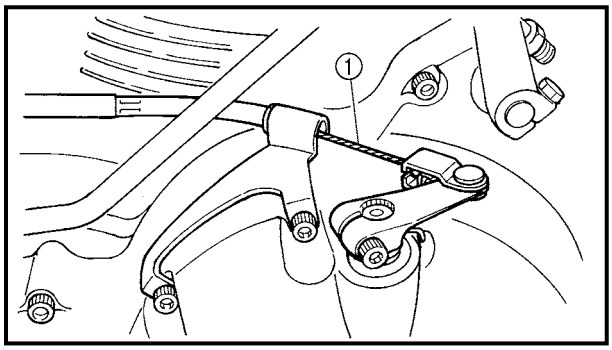

15.Connect:
- clutch cable ①

16.Fill:
- oil tank
  (with the specified amount of the recommended engine oil)
  Refer to "CHANGING THE ENGINE OIL" in chapter 3.

17.Install:
- engine left side cover
  Refer to "ROCKER ARMS, PUSH RODS AND VALVE LIFTERS".
- left side cover
  Refer to "SEATS AND SIDE COVERS" in chapter 3.

18.Adjust:
- clutch cable free play
  Refer to "ADJUSTING THE CLUTCH CABLE FREE PLAY" in chapter 3.

EAS00327
SHIFT SHAFT

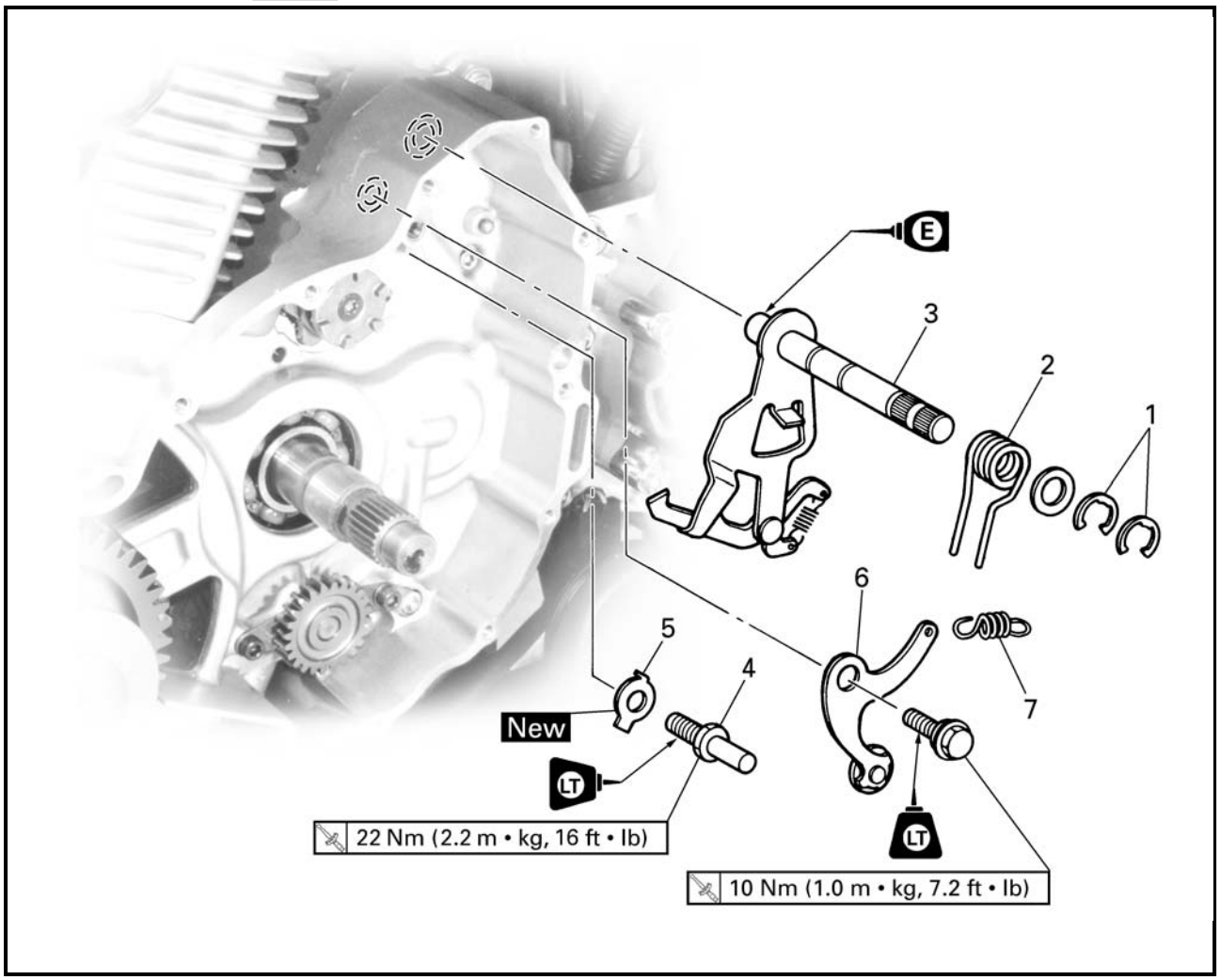

Order	Job/Part	Q'ty	Remarks
	Removing the shift shaft and stopper lever		Remove the parts in the order listed.
	Engine oil		Drain.
	Clutch housing		Refer to "CLUTCH".
1	Circlip	2	
2	Shift shaft spring	1	
3	Shift shaft	1	
4	Shift shaft spring stopper	1	
5	Lock washer	1	
6	Stopper lever	1	
7	Stopper lever spring	1	
			For installation, reverse the removal procedure.

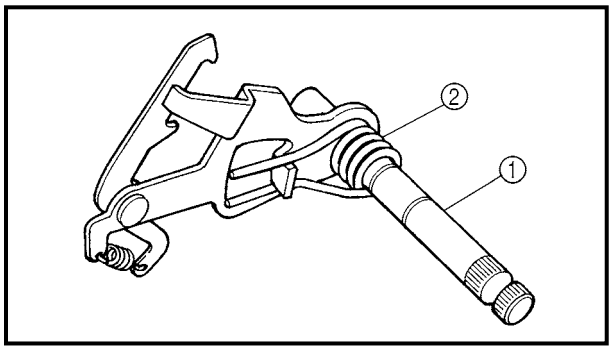

EAS00328
CHECKING THE SHIFT SHAFT

1. Check:
   - shift shaft ①
     Bends/damage/wear → Replace.
   - shift lever spring ②
     Damage/wear → Replace.

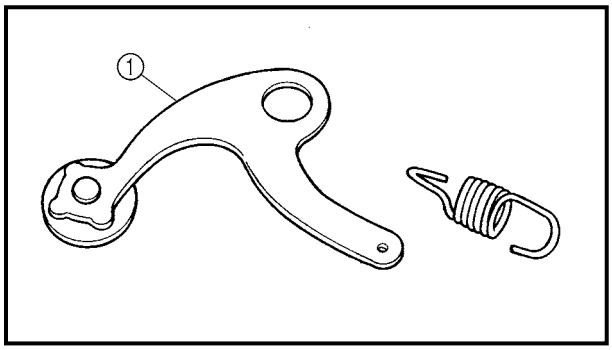

EAS00330
CHECKING THE STOPPER LEVER

1. Check:
   - stopper lever ①
     Bends/damage → Replace.
     Roller turns roughly → Replace the stopper lever.

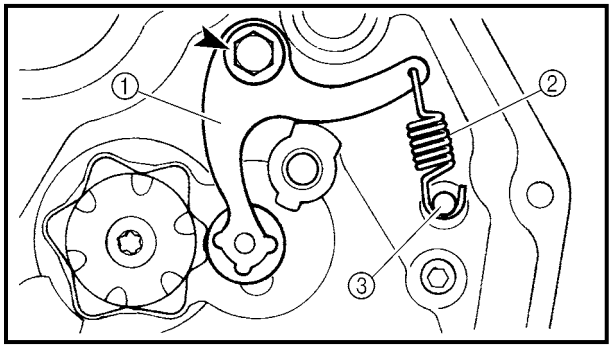

EAS00331
INSTALLING THE STOPPER LEVER AND SHIFT SHAFT

1. Install:
   - stopper lever ①
   - stopper lever spring ②

NOTE:
- Apply locking agent (LOCTITE®) to the threads of stopper lever bolt.
- Install the ends of the stopper lever spring onto the stopper lever and the crankcase boss ③.
- Mesh the stopper lever with the shift drum segment assembly.

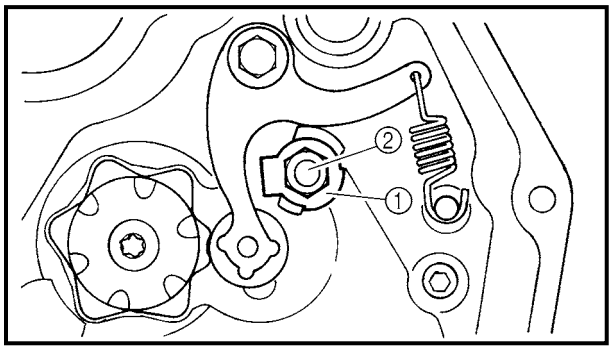

2. Install:
   - lock washer ① New
   - shift shaft spring stopper ②

	22 Nm (2.2 m · kg, 16 ft · lb)

NOTE:
Apply locking agent (LOCTITE®) to the threads of shift shaft spring stopper.

3. Bend the lock washer tab along a flat side of the shift shaft spring stopper.

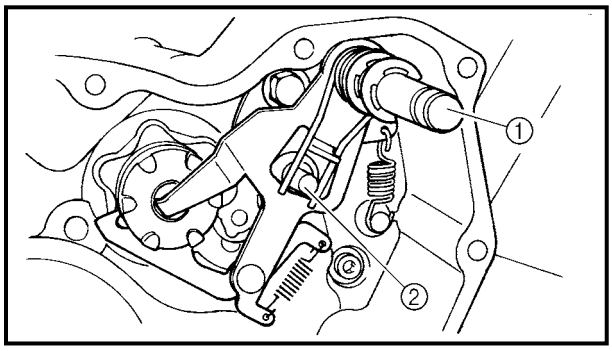

4. Install:
   - shift shaft spring
   - circlips
   - shift shaft ①

NOTE:
Install the end of the shift shaft spring onto the shift shaft spring stopper ②.

5. Install:
   - clutch housing
     Refer to “CLUTCH”.
6. Fill:
   - oil tank
     Refer to “CHANGING THE ENGINE OIL”.

EAS00341
GENERATOR AND STARTER CLUTCH

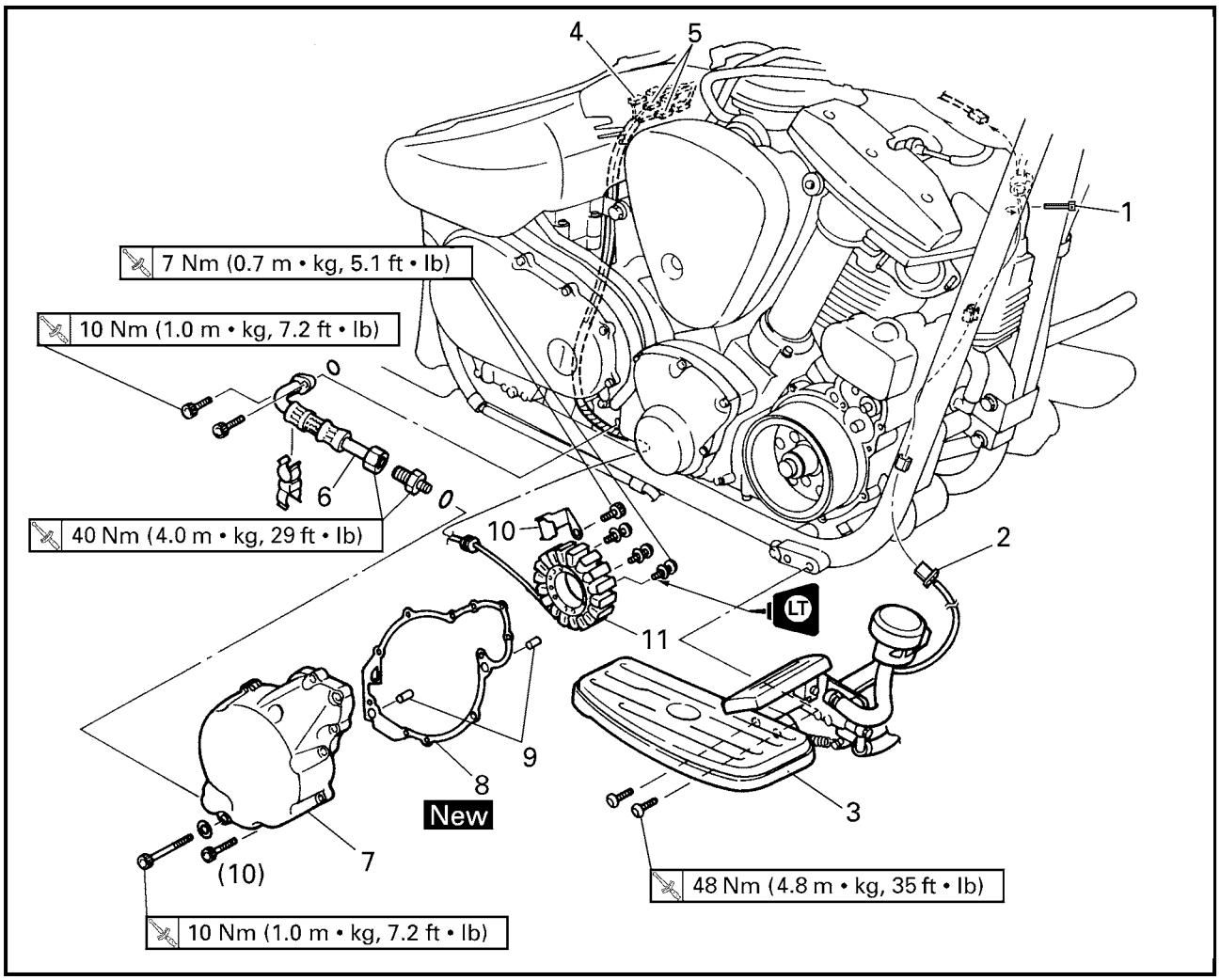

Order	Job/Part	Q'ty	Remarks
	Removing the stator coil assembly		Remove the parts in the order listed.
	Rider seat/left side cover/fuel tank		Refer to "SEATS AND SIDE COVERS" and "FUEL TANK" in chapter 3.
	Muffler/exhaust pipes		Refer to "ENGINE".
	Engine oil		Drain.
1	Plastic locking tie	1	
2	Rear brake light switch coupler	1	Disconnect.
3	Rider footrest (right)	1	
4	Stator coil assembly coupler	1	Disconnect.
5	Decompression solenoid coupler	2	Disconnect.
6	Oil delivery pipe	1	
7	Generator cover	1	
8	Generator cover gasket	1	
9	Dowel pin	2	

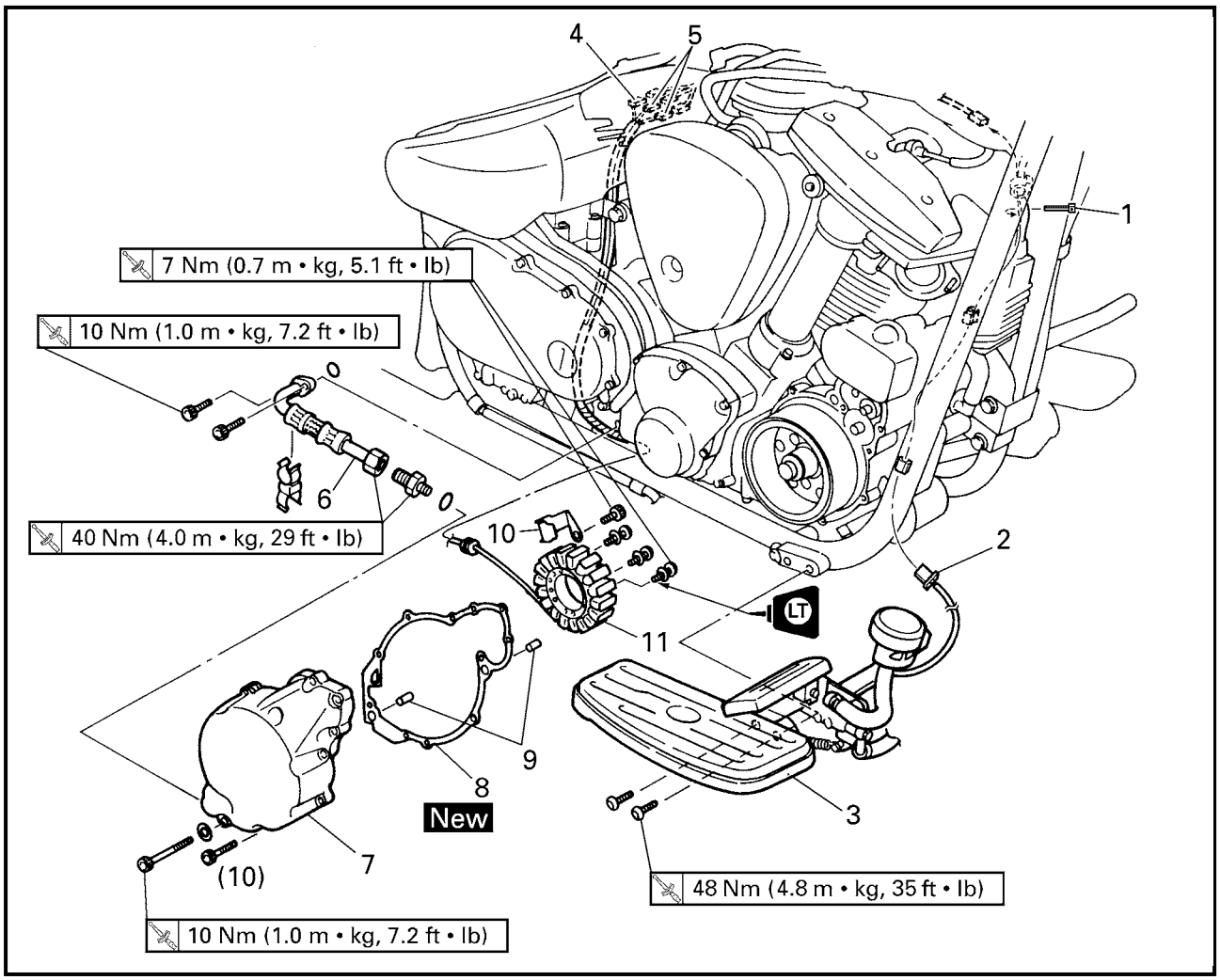

Order	Job/Part	Q'ty	Remarks
10	Stator coil assembly lead holder	1	
11	Stator coil assembly	1	
			For installation, reverse the removal procedure.

EAS00343

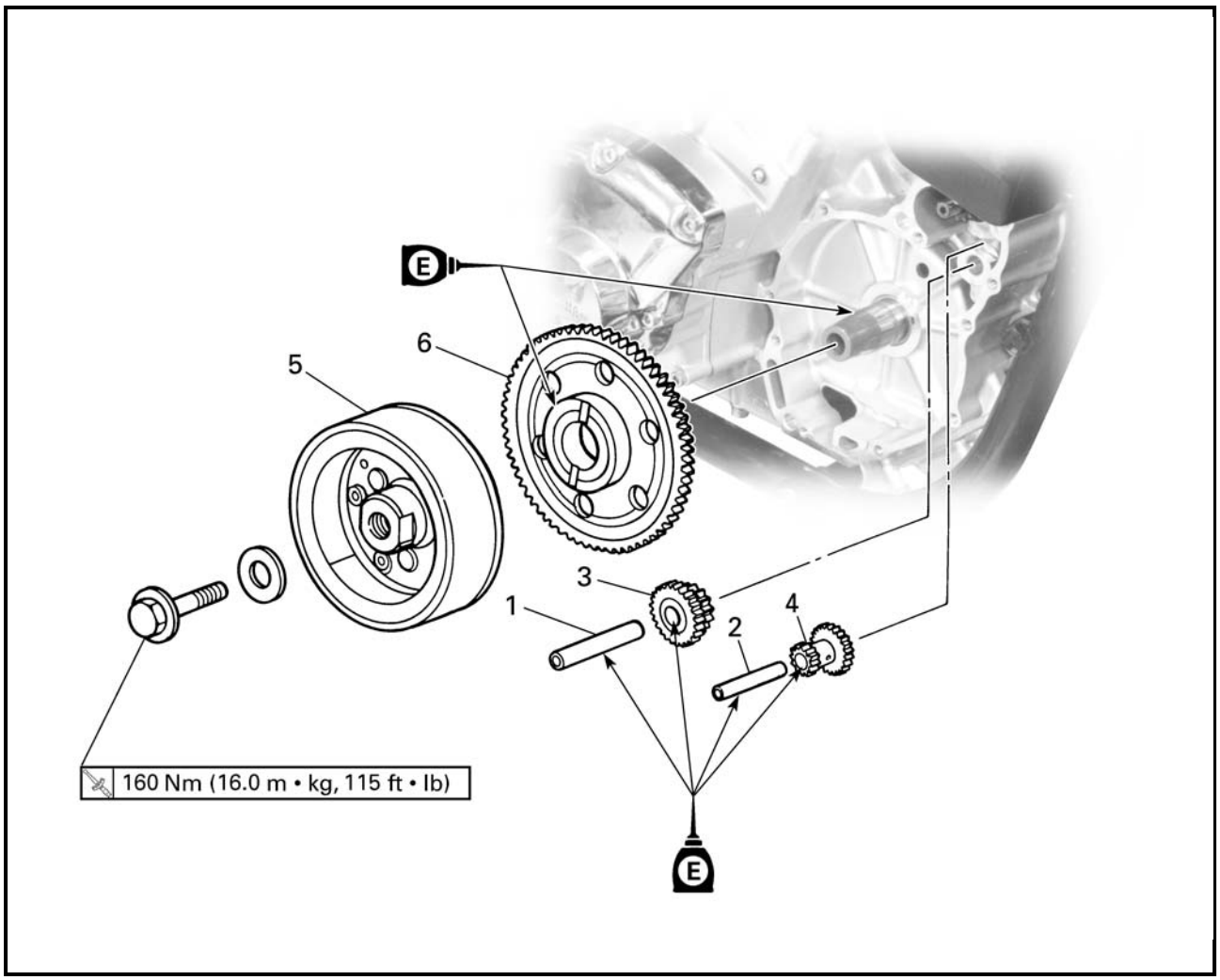

Order	Job/Part	Q'ty	Remarks
	Removing the generator rotor		Remove the parts in the order listed.
1	Starter clutch idle gear shaft #2	1	
2	Starter clutch idle gear shaft #1	1	
3	Starter clutch idle gear #2	1	
4	Starter clutch idle gear #1	1	
5	Generator rotor	1	
6	Starter clutch gear	1	
			For installation, reverse the removal procedure.

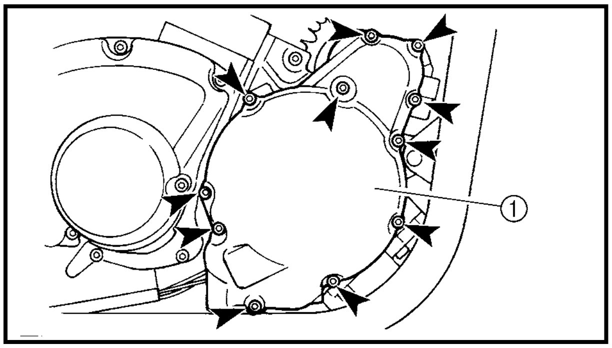

EAS00347
REMOVING THE GENERATOR
1. Remove:
   • generator cover ①

NOTE:
Loosen each bolt 1/4 of a turn at a time, in stages and in a crisscross pattern. After all of the bolts are fully loosened, remove them.

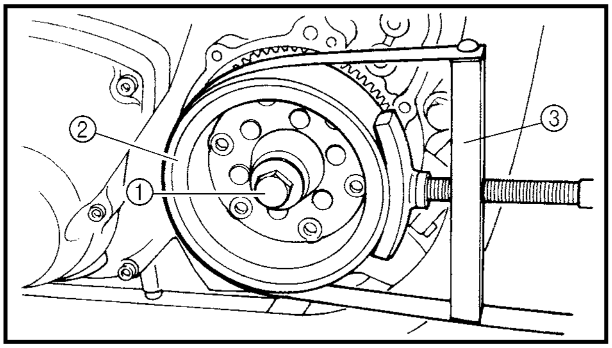

2. Remove:
   • generator rotor bolt ①
   • washer

NOTE:
While holding the generator rotor ② with the sheave holder ③, loosen the generator rotor bolt.

	Sheave holder **YS-01880**

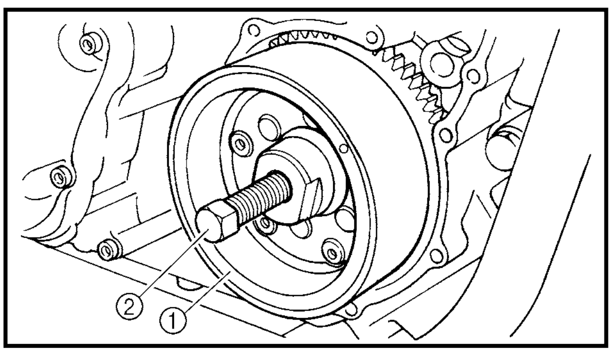

3. Remove:
   • generator rotor ①
     (with the rotor puller ②)

	Rotor puller **YM-01080-A**

5

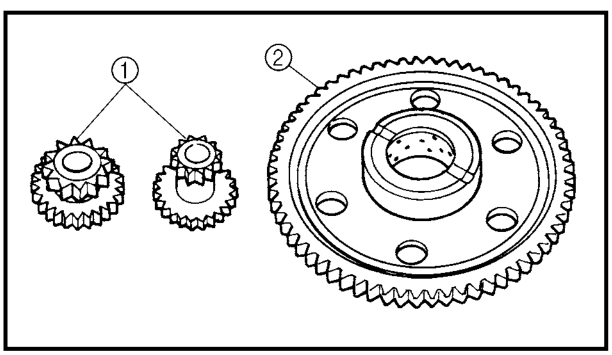

EAS00348
CHECKING THE STARTER CLUTCH
1. Check:
   • starter clutch idle gears ①
   • starter clutch gear ②
     Chips/pitting/roughness/wear → Replace the defective part(s).

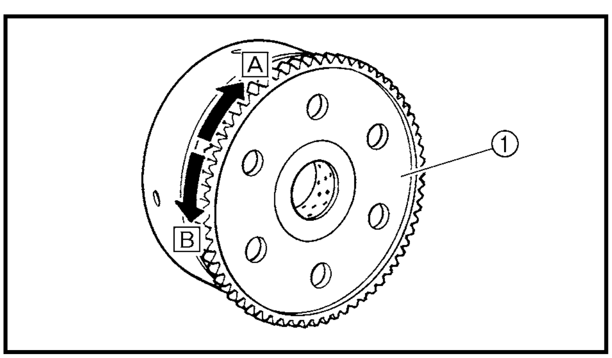

2. Check:
   • starter clutch operation

▼▼▼▼▼▼▼▼▼▼▼▼▼▼▼▼▼▼▼▼▼▼▼▼▼▼▼▼▼▼

a. Install the starter clutch gear ① onto the starter clutch and hold the starter clutch.
b. When turning the starter clutch gear clockwise [A], the starter clutch and the starter clutch gear should engage, otherwise the starter clutch is faulty and must be replaced.

c. When turning the starter clutch gear counterclockwise [B], it should turn freely, otherwise the starter clutch is faulty and must be replaced.

▲▲▲▲▲▲▲▲▲▲▲▲▲▲▲▲▲▲▲▲▲▲▲▲▲▲▲▲▲▲

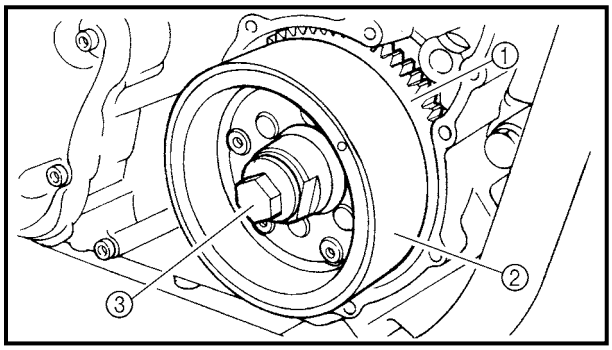

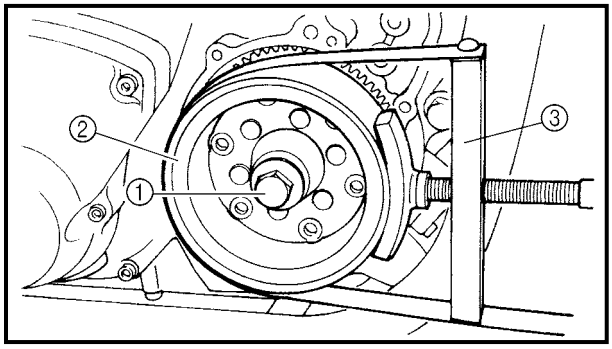

EAS00354

INSTALLING THE GENERATOR

1. Install:
   - starter clutch gear ①
   - generator rotor ②
   - washer
   - generator rotor bolt ③

NOTE:

Clean the tapered portion of the crankshaft and the generator rotor hub.

2. Tighten:
   - generator rotor bolt ①

	160 Nm (16.0 m · kg, 115 ft · lb)

NOTE:

While holding the generator rotor ② with the sheave holder ③, tighten the generator rotor bolt.

	Sheave holder **YS-01880**

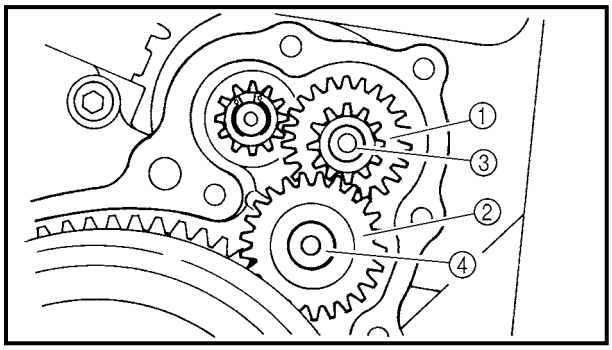

3. Install:
   - starter clutch idle gear #1 ①
   - starter clutch idle gear #2 ②
   - starter clutch idle gear shaft #1 ③
   - starter clutch idle gear shaft #2 ④

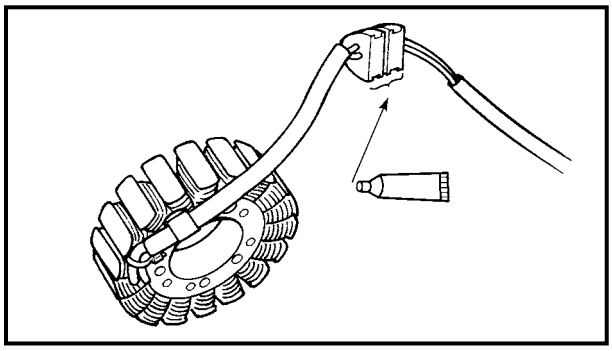

4. Apply:
   - sealant
     (onto the stator coil assembly lead grommet)

	Quick Gasket® **ACC-11001-05-01**

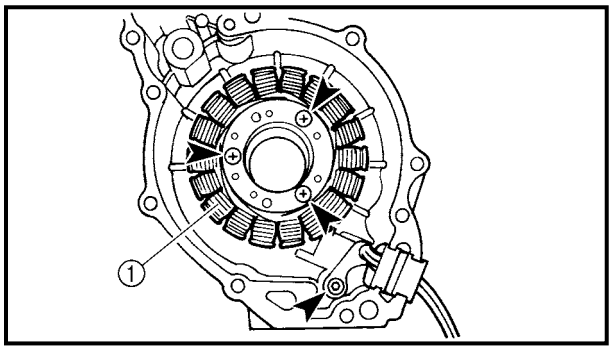

5. Install:
   - stator coil assembly ①
     7 Nm (0.7 m · kg, 5.1 ft · lb)
   - stator coil assembly lead holder
     7 Nm (0.7 m · kg, 5.1 ft · lb)

NOTE:
Apply locking agent (LOCTITE®) to the threads of the stator coil assembly bolts.

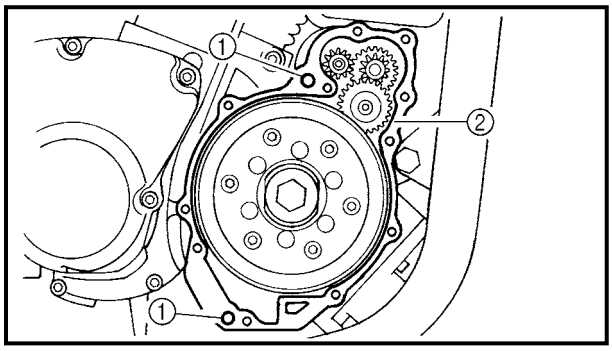

6. Install:
   - dowel pins ①
   - generator cover gasket ② New

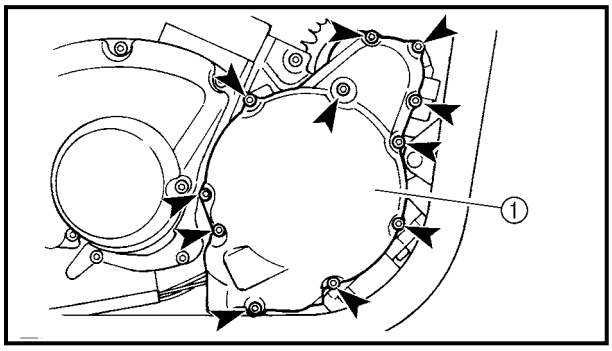

7. Install:
   - generator cover ①
     10 Nm (1.0 m · kg, 7.2 ft · lb)

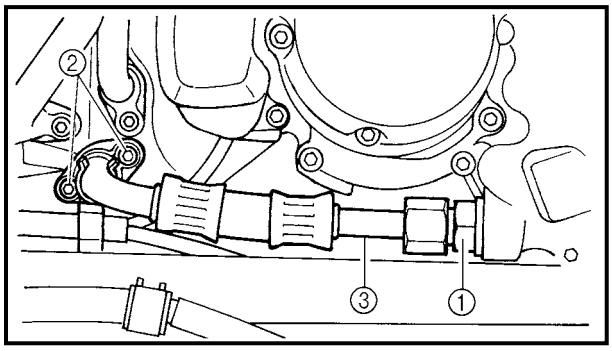

8. Install:
   - oil delivery pipe joint ①
     40 Nm (4.0 m · kg, 29 ft · lb)
   - bolts ②
     10 Nm (1.0 m · kg, 7.2 ft · lb)
   - oil delivery pipe ③
     40 Nm (4.0 m · kg, 29 ft · lb)

9. Connect:
   - decompression solenoid couplers
   - stator coil assembly coupler

NOTE:
Refer to "CABLE ROUTING" in chapter 2.

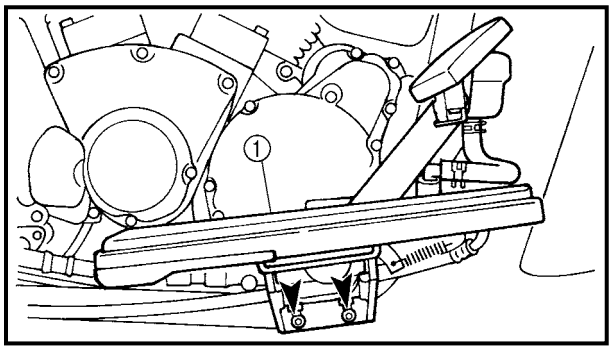

10. Install:
   - rider footrest (right) ①

	48 Nm (4.8 m · kg, 35 ft · lb)

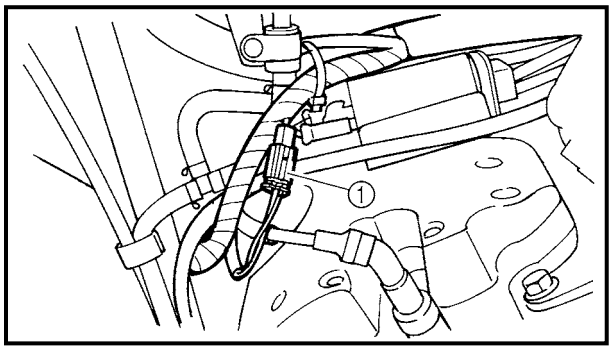

11. Connect:
   - rear brake light switch coupler ①

NOTE:
Refer to "CABLE ROUTING" in chapter 2.

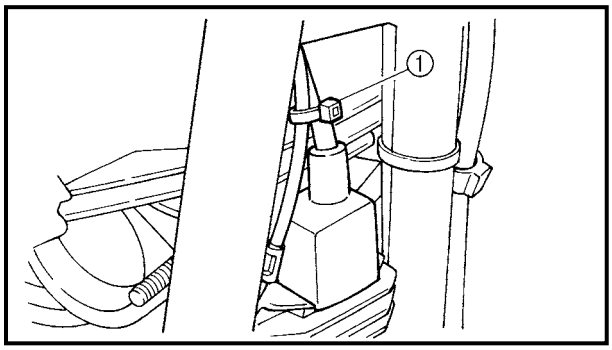

12. Install:
   - plastic locking tie ①

NOTE:
Fasten the rear brake light switch lead and wire harness.

13. Fill:
   - oil tank
     (with the specified amount of the recommended engine oil)
     Refer to "CHANGING THE ENGINE OIL" in chapter 3.

14. Install:
- exhaust pipes
- muffler

  Refer to “ENGINE”.

15. Install:
- fuel tank
- left side cover
- rider seat

  Refer to “FUEL TANK” and “SEATS AND SIDE COVERS” in chapter 3.

TRANSFER GEAR CASE

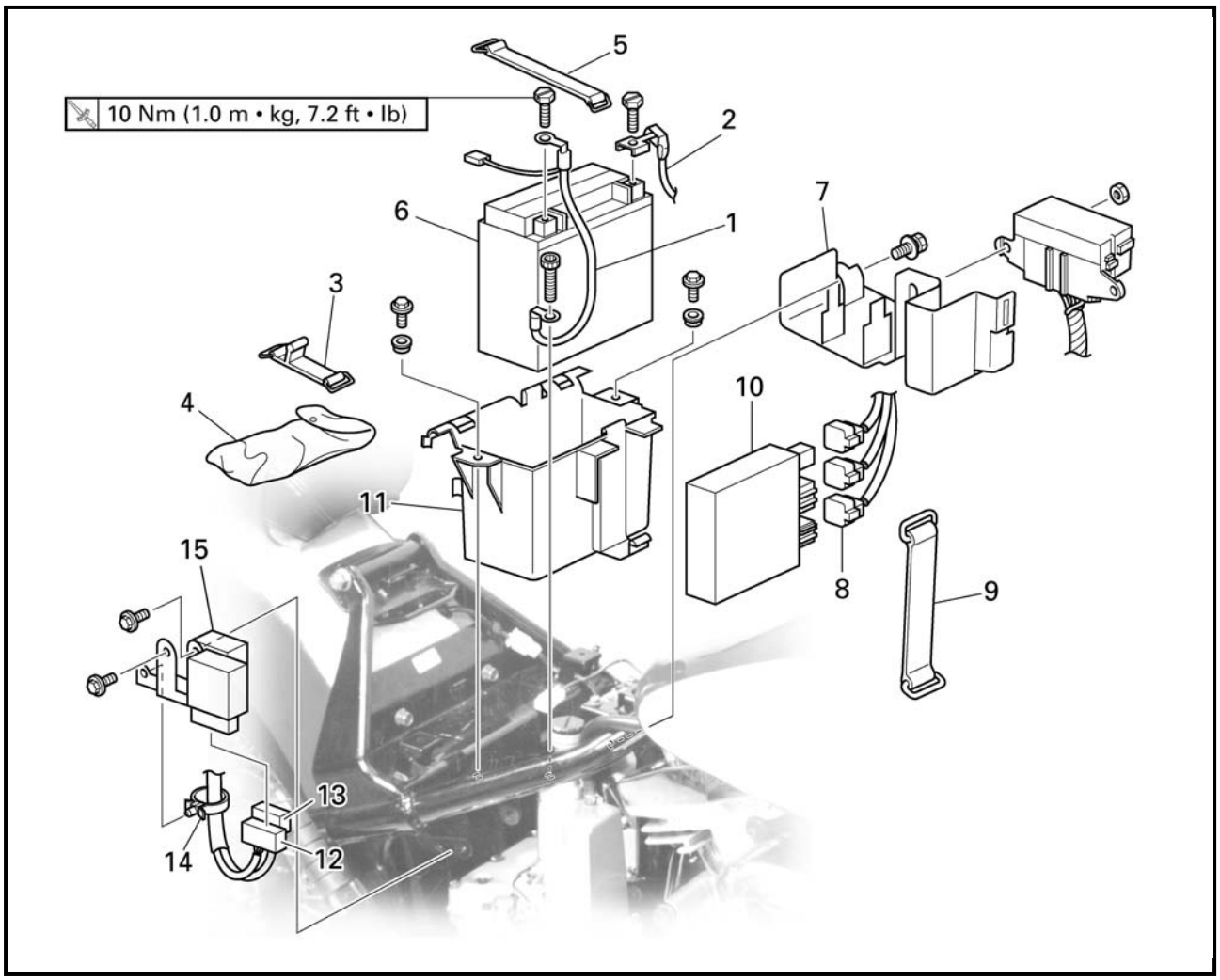

Order	Job/Part	Q'ty	Remarks
	Removing the battery box		Remove the parts in the order listed.
	Rider seat/side covers		Refer to "SEATS AND SIDE COVERS" in chapter 3.
1	Negative battery lead	1	
2	Positive battery lead	1	Disconnect.
3	Tool kit holder	1	
4	Tool kit	1	
5	Battery holder	1	
6	Battery	1	
7	Plastic bracket	1	
8	Ignitor unit coupler	3	Disconnect.
9	Ignitor unit holder	1	

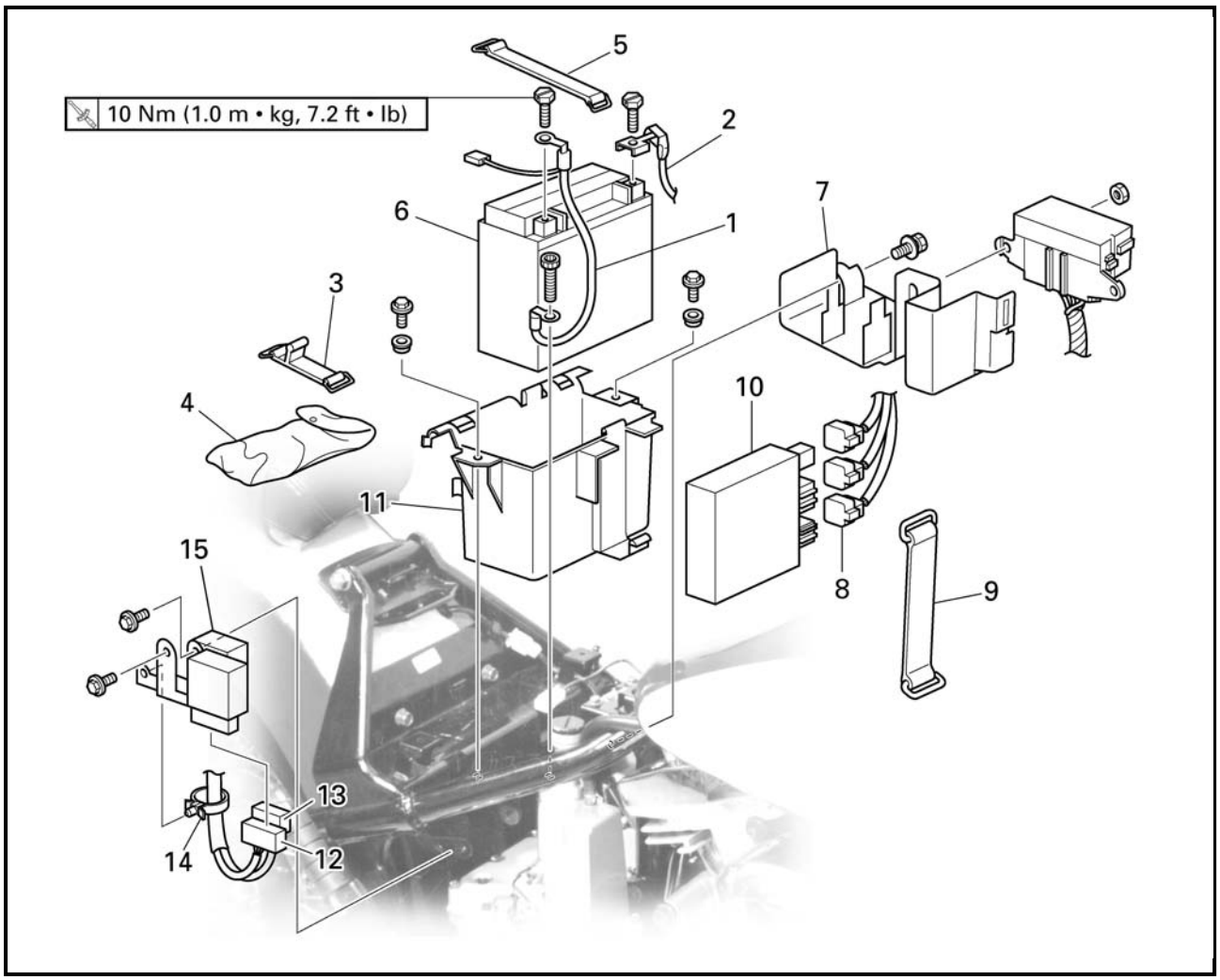

Order	Job/Part	Q'ty	Remarks
10	Ignitor unit	1	
11	Battery box	1	
12	Relay unit coupler	1	Disconnect.
13	Turn signal relay coupler	1	Disconnect.
14	Plastic clamp	1	
15	Relay bracket	1	
			For installation, reverse the removal procedure.

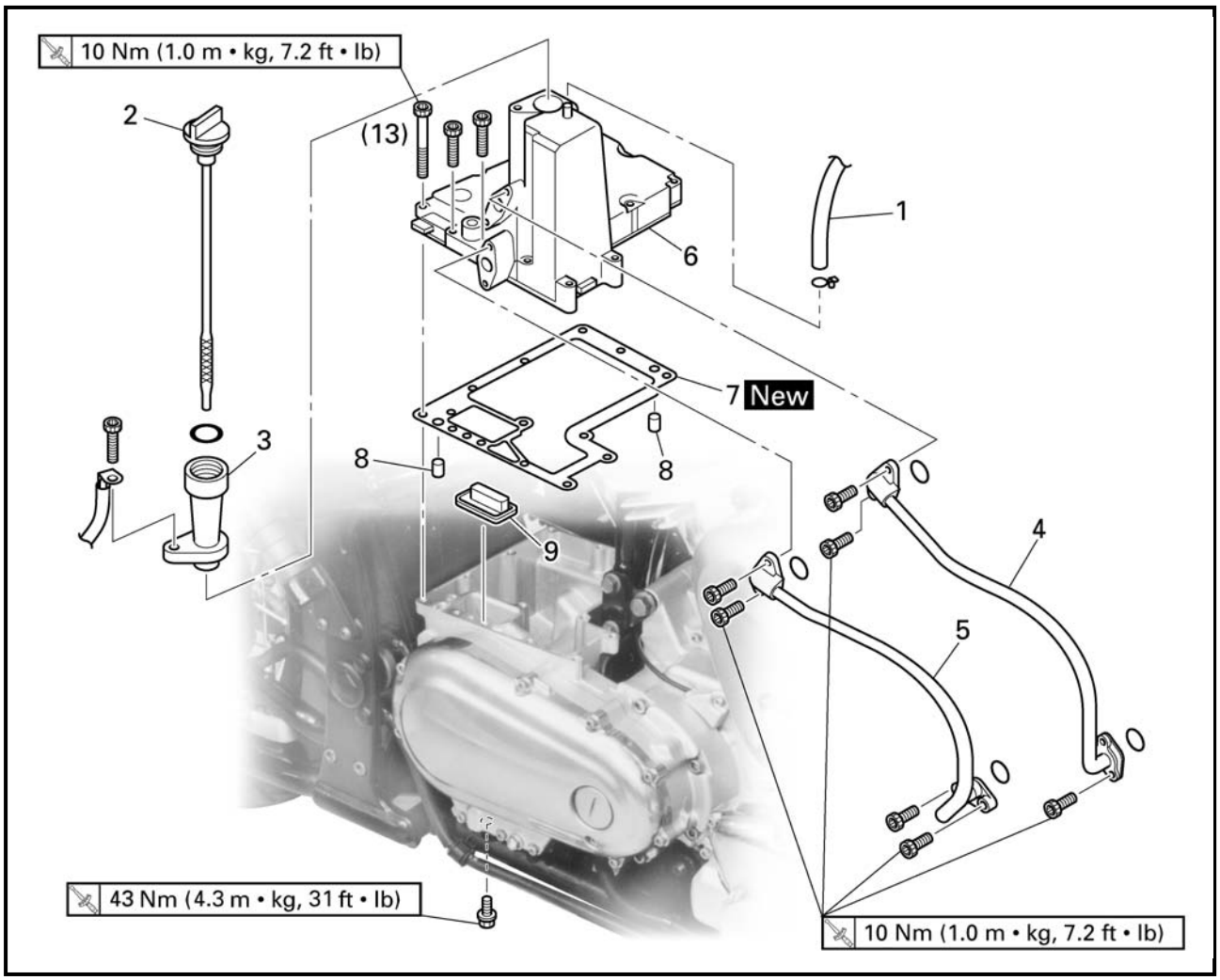

Order	Job/Part	Q'ty	Remarks
	Removing the oil tank cover		Remove the parts in the order listed.
	Muffler/exhaust pipes		Refer to "ENGINE".
	Engine oil		Drain.
1	Oil tank breather hose	1	Disconnect.
2	Dipstick	1	
3	Dipstick joint	1	
4	Oil pipe #1	1	
5	Oil pipe #2	1	
6	Oil tank cover	1	
7	Oil tank cover gasket	1	
8	Dowel pin	2	
9	Oil strainer	1	
			For installation, reverse the removal procedure.

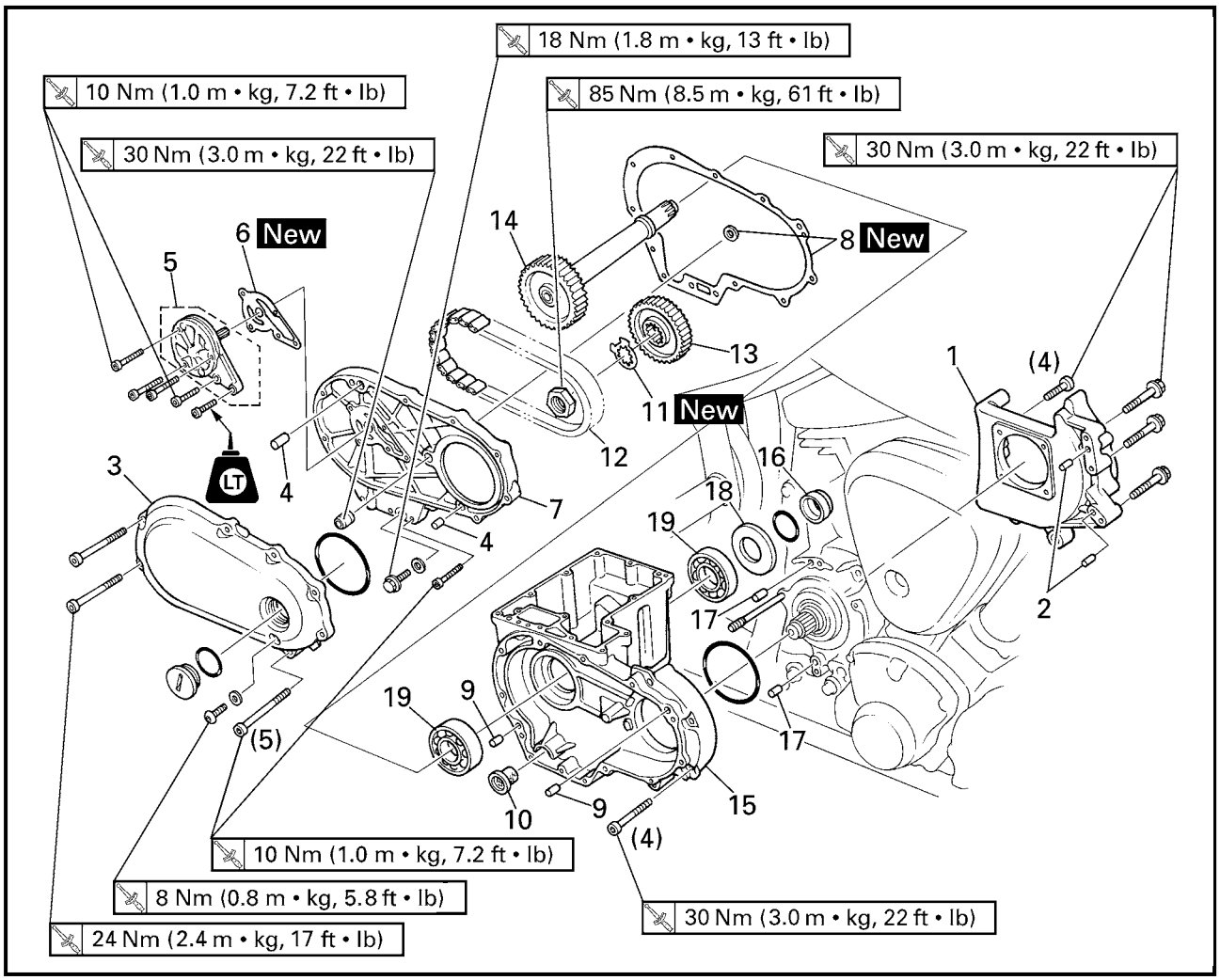

Order	Job/Part	Q'ty	Remarks
	Removing the transfer gear case		Remove the parts in the order listed.
	Transfer gear oil		Drain.
	Drive pulley		Refer to "DRIVE BELT AND DRIVE PULLEY" in chapter4.
1	Drive pulley case	1	
2	Dowel pin	2	
3	Cover	1	
4	Dowel pin	2	
5	Transfer gear oil pump	1	
6	Transfer gear oil pump gasket	1	
7	Transfer gear case cover	1	
8	Transfer gear case cover gasket	1	
9	Dowel pin	2	
10	Oil strainer	1	

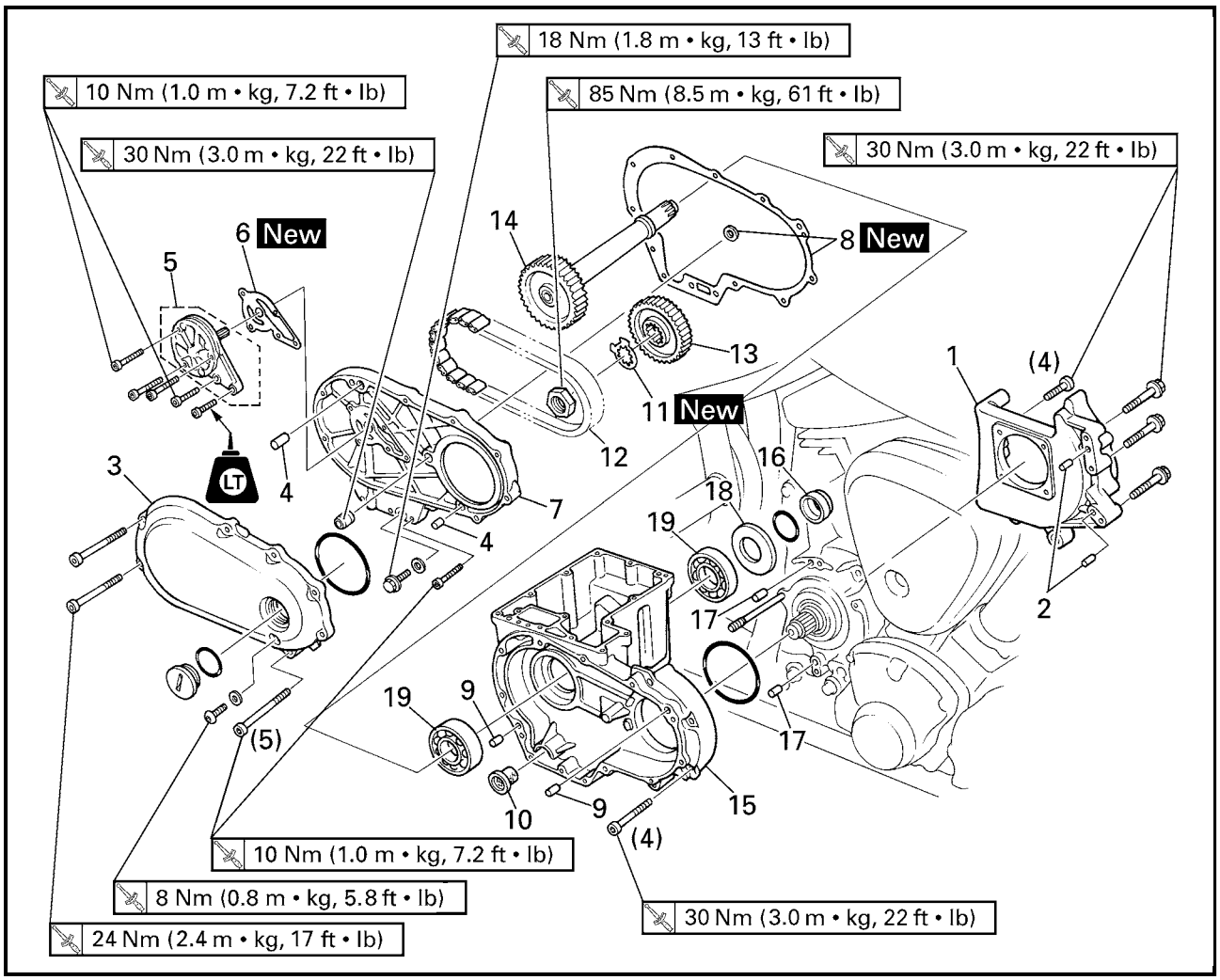

Order	Job/Part	Q'ty	Remarks
11	Lock washer	1	
12	Primary chain	1	
13	Middle drive gear	1	
14	Middle driven shaft	1	
15	Transfer gear case	1	
16	Spacer	1	
17	Dowel pin	2	
18	Oil seal	1	
19	Bearing	2	
			For installation, reverse the removal procedure.

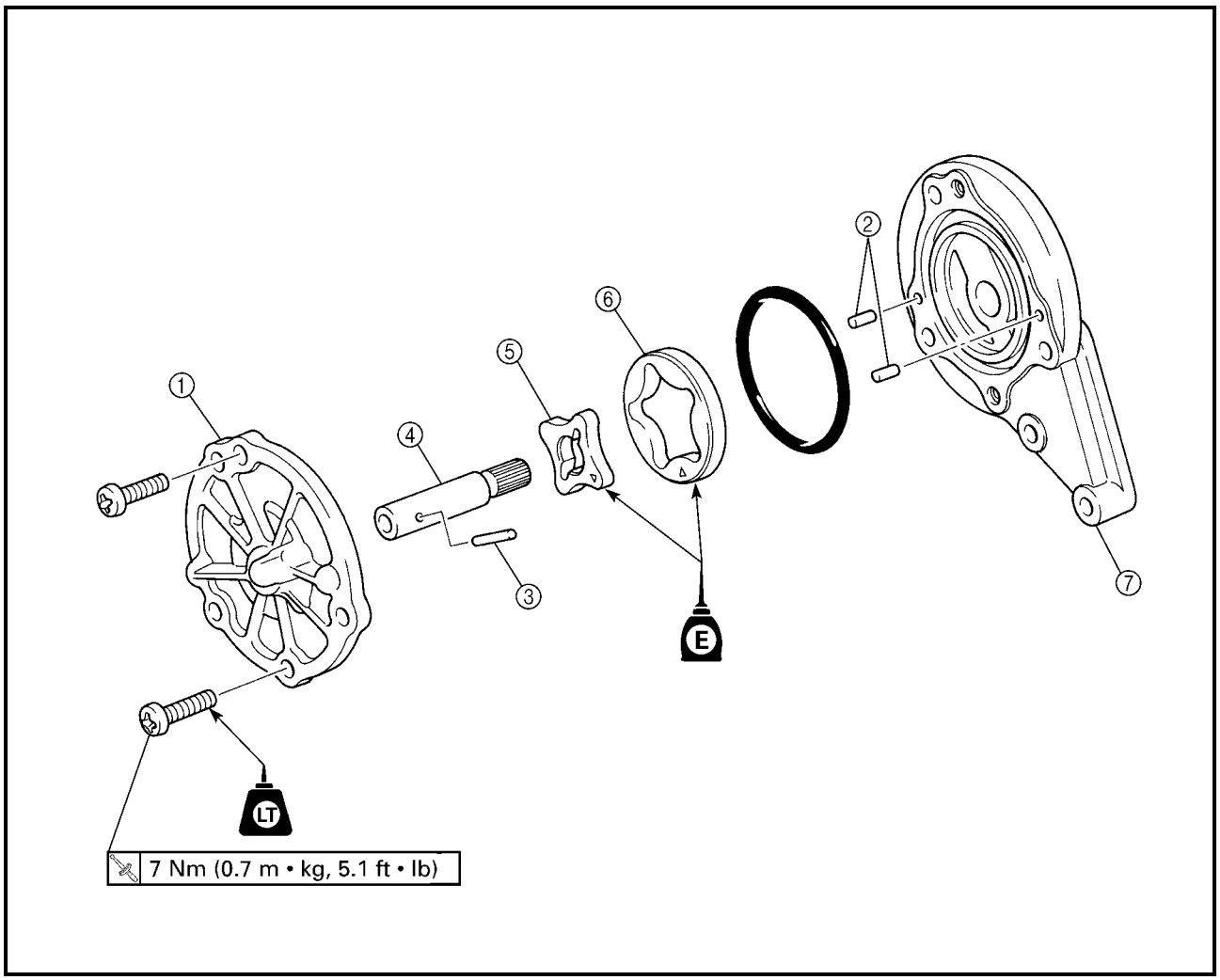

Order	Job/Part	Q'ty	Remarks
	Disassembling the transfer gear case oil pump		Remove the parts in the order listed.
①	Oil pump cover	1	
②	Pin	2	
③	Pin	1	
④	Oil pump shaft	1	
⑤	Oil pump inner rotor	1	
⑥	Oil pump outer rotor	1	
⑦	Oil pump housing	1	
			For assembly, reverse the disassembly procedure.

REMOVING THE BATTERY

1. Disconnect:
   - battery leads
     (from the battery terminals)

⚠ WARNING

First, disconnect the negative battery lead, then the positive battery lead.

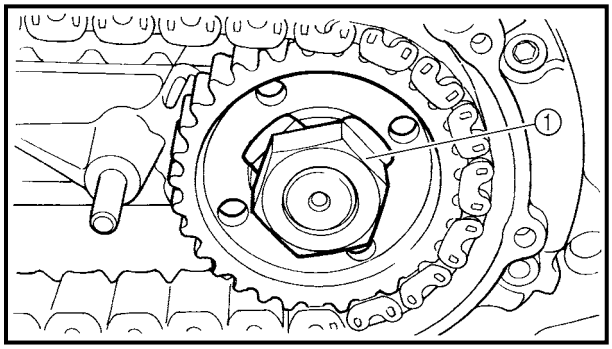

REMOVING THE MIDDLE DRIVEN SHAFT

NOTE:
Loosen the middle drive gear nut before removing the drive pulley.

1. Straighten the lock washer tab.
2. Loosen:
   - middle drive gear nut ①

NOTE:
When loosening the middle drive gear nut, press down on the brake pedal so the middle drive gear does not move.

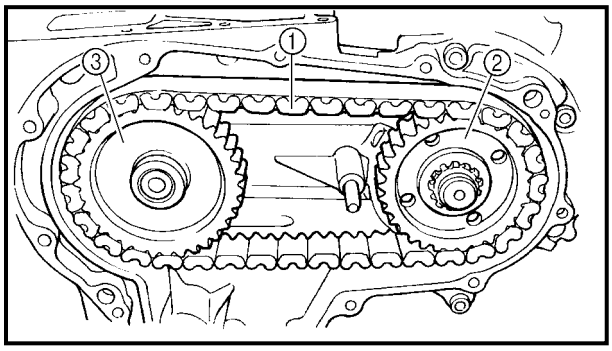

3. Remove:
   - primary chain ①
   - middle drive gear ②
   - middle driven shaft ③

NOTE:
Remove the primary chain, middle drive gear and middle driven shaft at the same time.

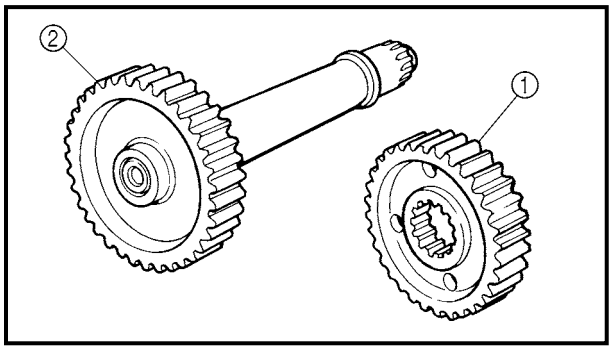

CHECKING THE MIDDLE DRIVE

1. Check:
   - middle drive gear ①
   - middle driven gear ②
     Damage/wear → Replace the middle drive gear, middle driven shaft and primary chain as a set.

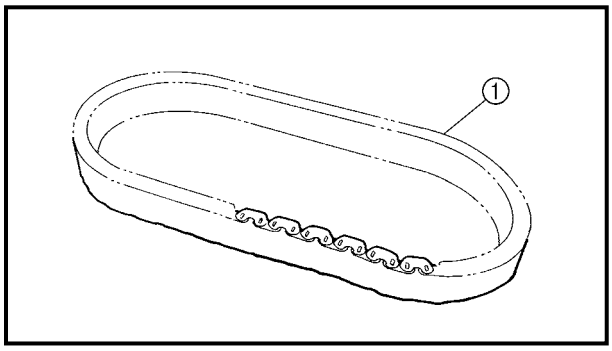

2. Check:
   - primary chain ①
     Damage/stiffness → Replace the primary chain, middle drive gear and middle driven shaft as a set.

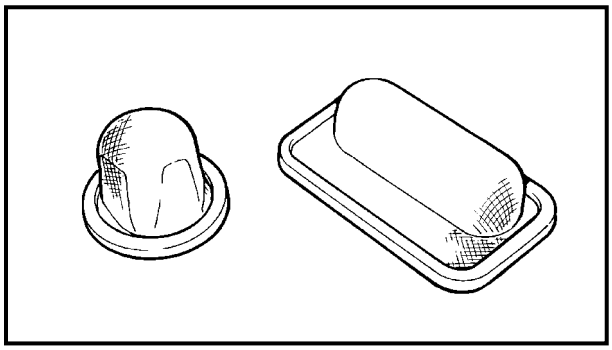

CHECKING THE OIL STRAINER

1. Check:
   - oil strainer
     Damage → Replace.
     Contaminants → Clean with engine oil.

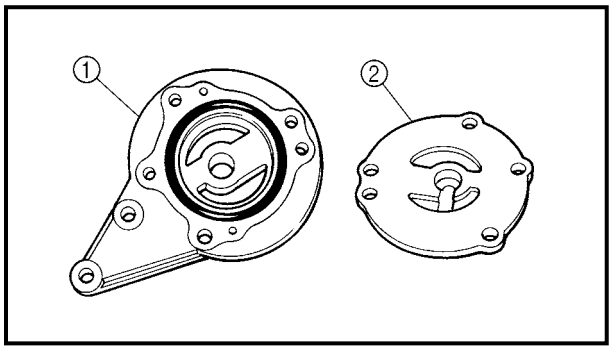

CHECKING THE OIL PUMP

1. Check:
   - oil pump housing ①
   - oil pump cover ②
     Cracks/damage/wear → Replace the defective part(s).

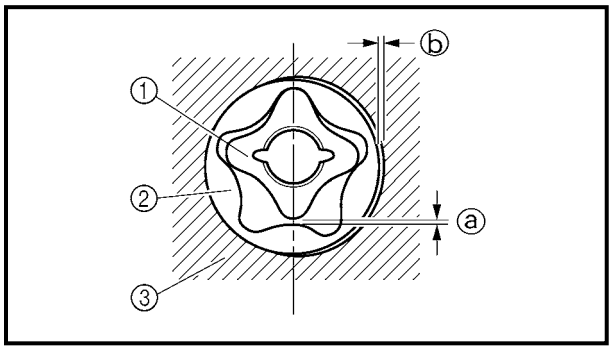

2. Measure:
   - inner rotor-to-outer rotor tip clearance ⓐ
   - outer rotor-to-oil pump housing clearance ⓑ
     Out of specification → Replace the oil pump.

① Inner rotor
② Outer rotor
③ Oil pump housing

Inner rotor-to-outer rotor tip clearance
0.07 ~ 0.12 mm (0.003 ~ 0.005 in)
Outer rotor-to-oil pump housing clearance
0.03 ~ 0.08 mm (0.001 ~ 0.003 in)

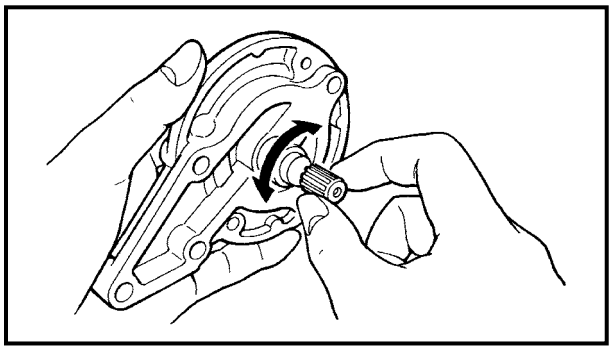

3. Check:
   - oil pump operation
     Unsmooth → Repair or replace the defective part(s).

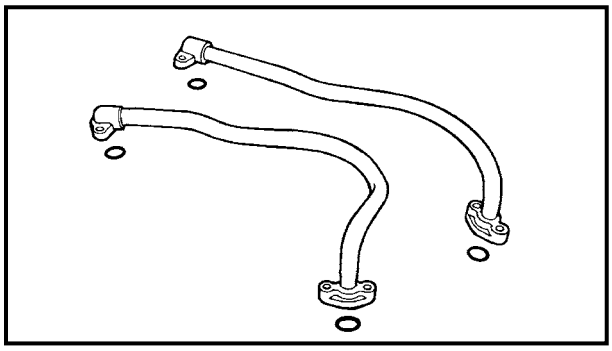

CHECKING THE OIL PIPE

1. Check:
   - oil pipe
     Damage → Replace.

EAS00375

ASSEMBLING THE OIL PUMP

1. Lubricate:
   - inner rotor
   - outer rotor
   - oil pump shaft
     (with the recommended lubricant)

	Recommended lubricant **Engine oil**

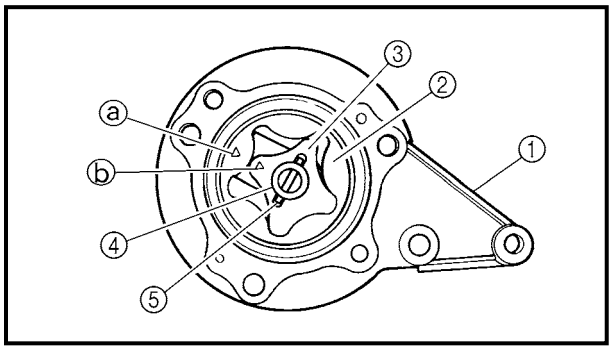

2. Install:
   - oil pump housing ①
   - oil pump outer rotor ②
   - oil pump inner rotor ③
   - oil pump shaft ④
   - pin ⑤

NOTE:

- When installing the oil pump shaft, align the pin in the oil pump shaft with the groove in the oil pump inner rotor.
- Align the arrow ⓐ on the oil pump outer rotor with the arrow ⓑ on the oil pump inner rotor.

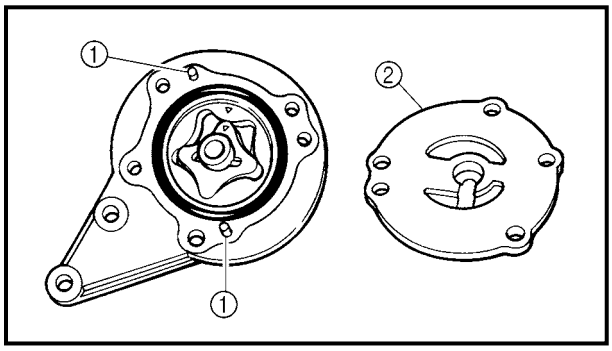

3. Install:
   - pins ①
   - oil pump cover ②

	7 Nm (0.7 m · kg, 5.1 ft · lb)

NOTE:
Apply locking agent (LOCTITE®) to the threads of the oil pump cover screws.

4. Check:
   - oil pump operation
     Refer to "CHECKING THE OIL PUMP".

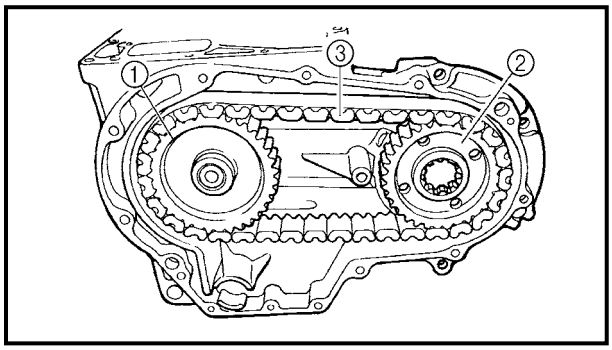

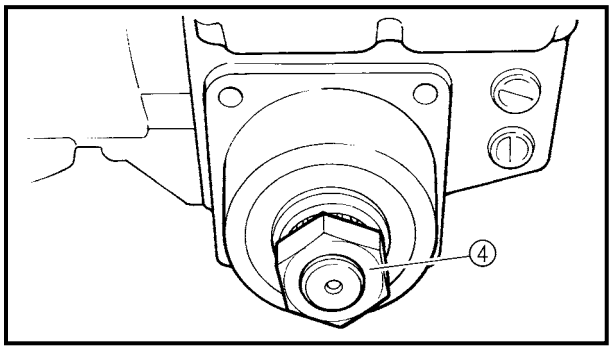

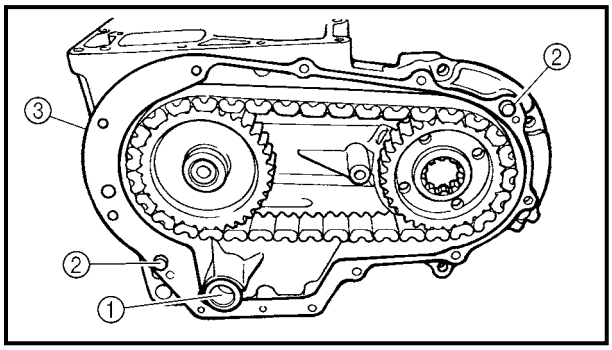

INSTALLING THE TRANSFER GEAR CASE

1. Install:
   - bearings
   - oil seal
2. Install:
   - middle driven shaft ①
   - middle drive gear ②
   - primary chain ③
     (into the transfer gear case)
   - O-ring
   - spacer
   - drive pulley nut ④

NOTE:
- Install the middle driven shaft, middle drive gear and primary chain at the same time.
- Temporarily install the drive pulley nut onto the middle driven shaft.

3. Install:
   - oil strainer ①
   - dowel pins ②
   - transfer gear case cover gasket ③ New

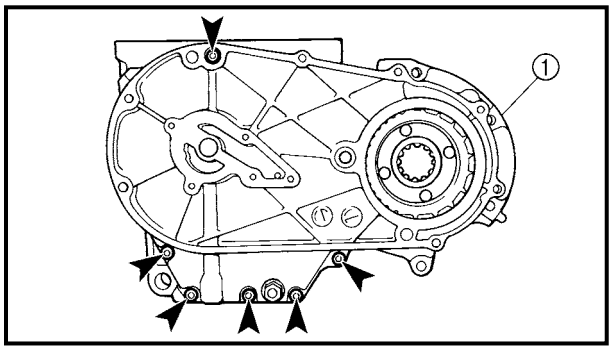

4. Install:
   - transfer gear case cover ①

	10 Nm (1.0 m · kg, 7.2 ft · lb)

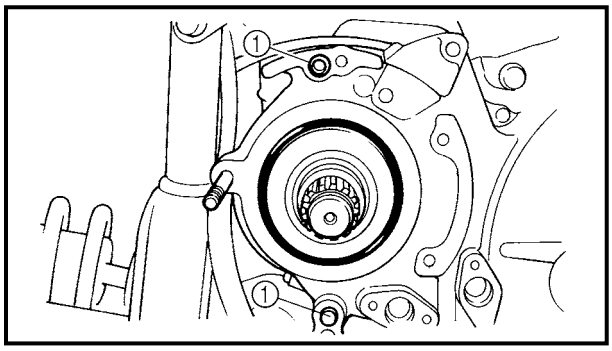

5. Install:
   - dowel pins ①

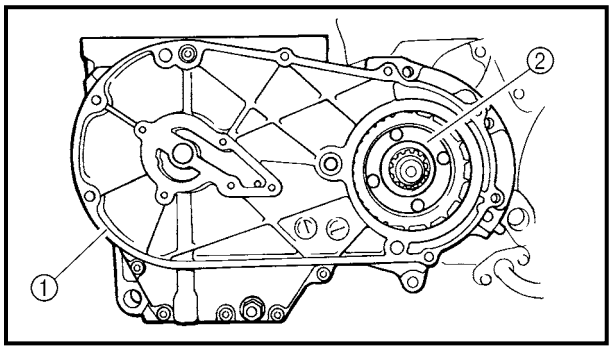

6. Install:
   - transfer gear case assembly ①

NOTE:
- While installing the middle drive gear ② onto the drive axle, install the transfer gear case assembly onto the engine.
- Align the splines on the middle gear with the splines on the drive axle.

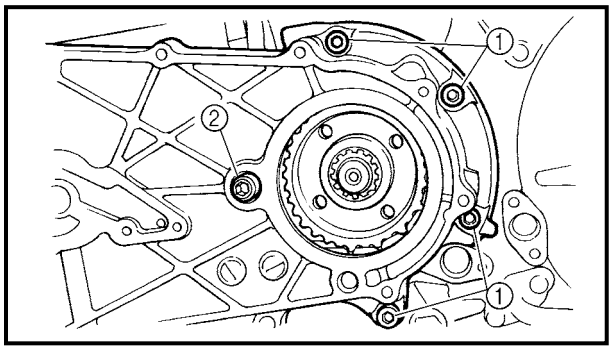

7. Install:
   - transfer gear case bolts ①

	30 Nm (3.0 m · kg, 22 ft · lb)

   - nut ②

	30 Nm (3.0 m · kg, 22 ft · lb)

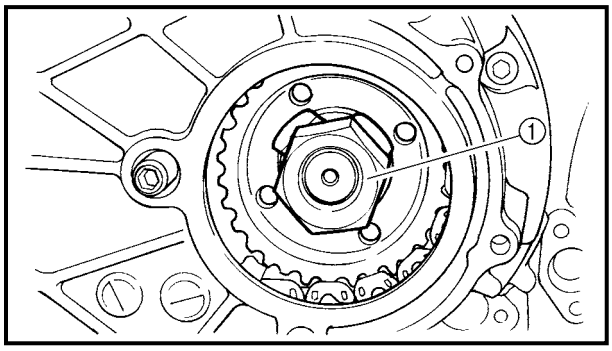

8. Install:
   - lock washer New
   - middle drive gear nut ①

	85 Nm (8.5 m · kg, 61 ft · lb)

9. Bend the lock washer tab along a flat side of the nut.

10.Remove:
- drive pulley nut

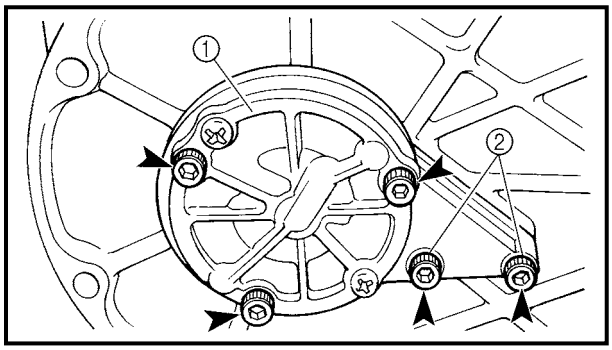

11.Install:
- transfer gear oil pump gasket New
- transfer gear oil pump ①

	10 Nm (1.0 m · kg, 7.2 ft · lb)

NOTE:

Apply locking agent (LOCTITE®) only to the threads of the transfer gear oil pump bolts ② (M6 × 25 mm bolts).

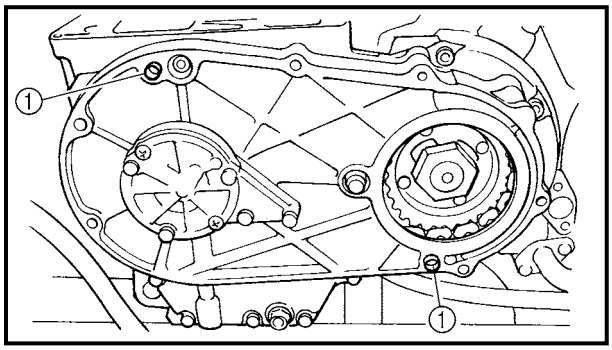

12.Install:
- dowel pins ①

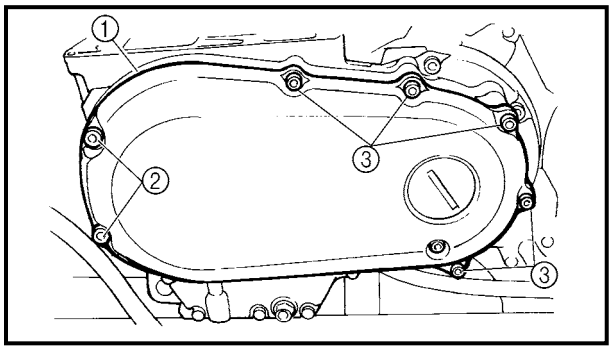

13.Install:
- cover ①
- cover bolts (M8) ②

	24 Nm (2.4 m · kg, 17 ft · lb)

- cover bolts (M6) ③

	10 Nm (1.0 m · kg, 7.2 ft · lb)

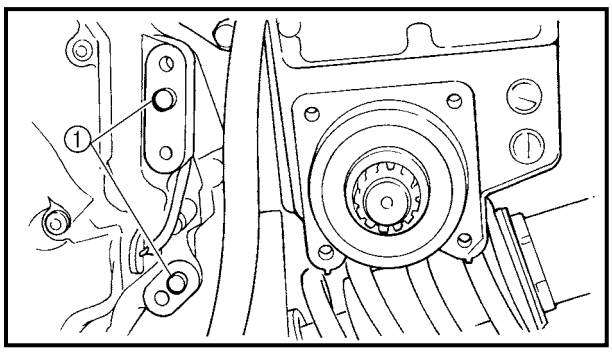

14.Install:
- dowel pins ①

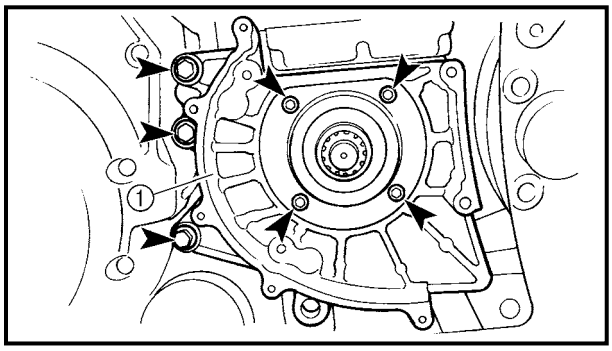

15.Install:
- drive pulley case ①

30 Nm (3.0 m · kg, 22 ft · lb)

16.Install:
- drive pulley
  Refer to "DRIVE BELT AND DRIVE PULLEY" in chapter 4.

17.Fill:
- transfer gear case
  (with the specified amount of the recommended transfer gear oil)
  Refer to "CHANGING THE TRANSFER GEAR OIL" in chapter 3.

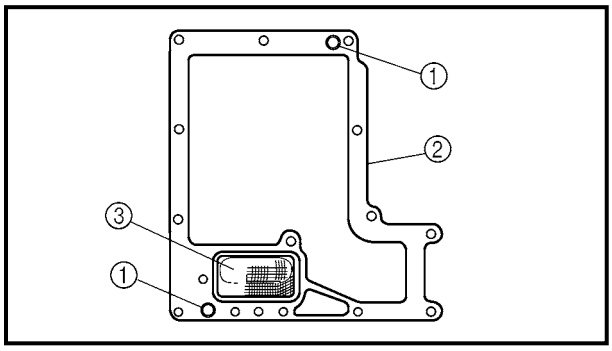

INSTALLING THE OIL TANK COVER

1. Install:
   - dowel pins ①
   - oil tank cover gasket ② New
   - oil strainer ③

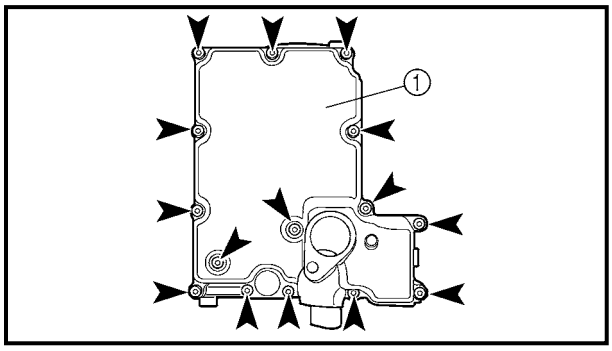

2. Install:
   - oil tank cover ①

10 Nm (1.0 m · kg, 7.2 ft · lb)

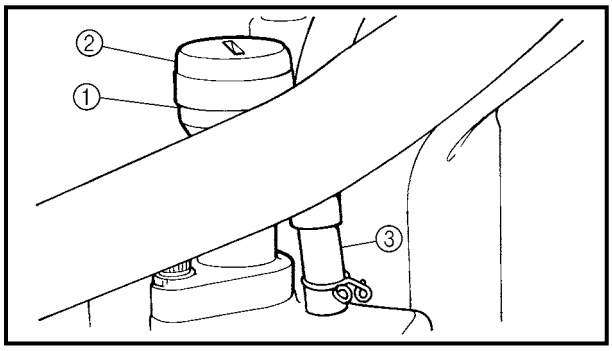

3. Install:
   - dipstick joint ①
   - dipstick ②

NOTE:
Finger tighten the dipstick joint bolt.

4. Connect:
   - oil tank breather hose ③

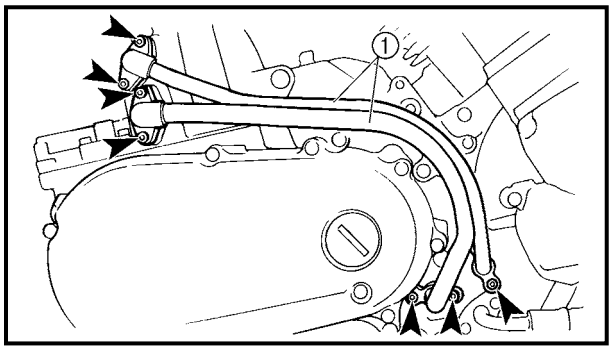

5. Install:
   - oil pipes ① **10 Nm (1.0 m · kg, 7.2 ft · lb)**

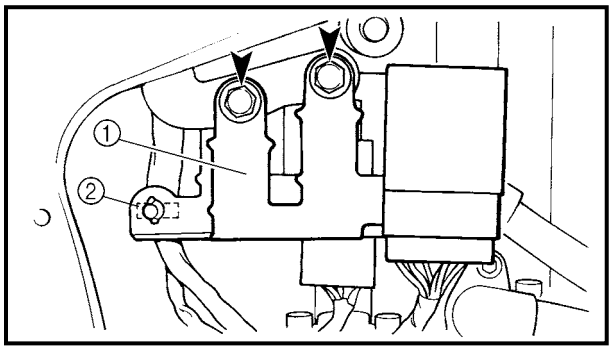

INSTALLING THE BATTERY

1. Install:
   - relay bracket ①
   - plastic clamp ②
2. Connect:
   - turn signal relay coupler
   - relay unit coupler

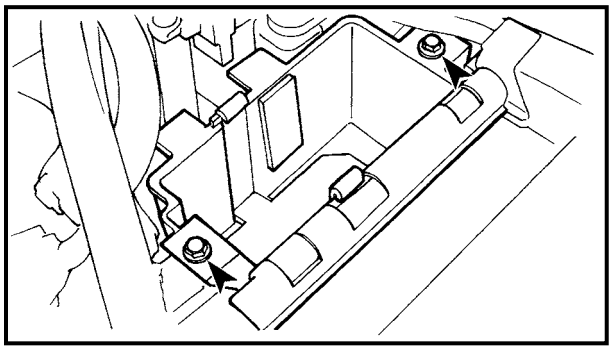

3. Install:
   - battery box

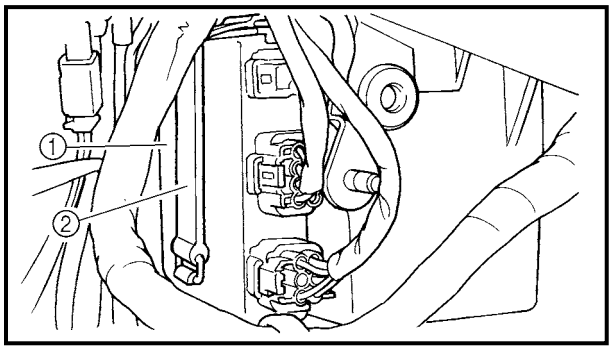

4. Install:
   - ignitor unit ①
   - ignitor unit holder ②
5. Connect:
   - ignitor unit couplers

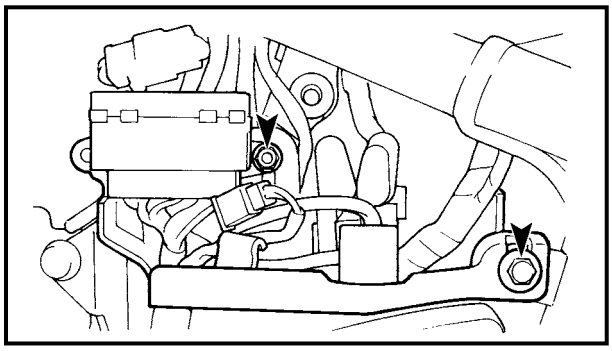

6. Install:
   - plastic bracket

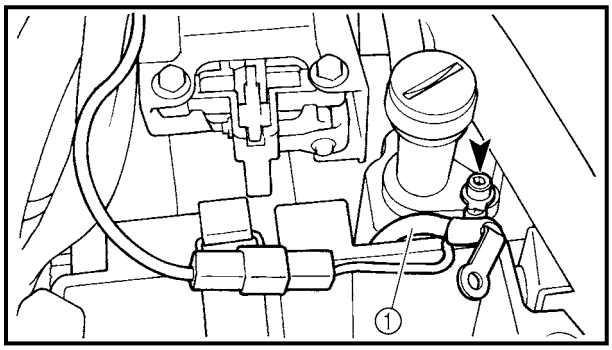

7. Install:
   - negative battery lead ①
     (to the dipstick joint)

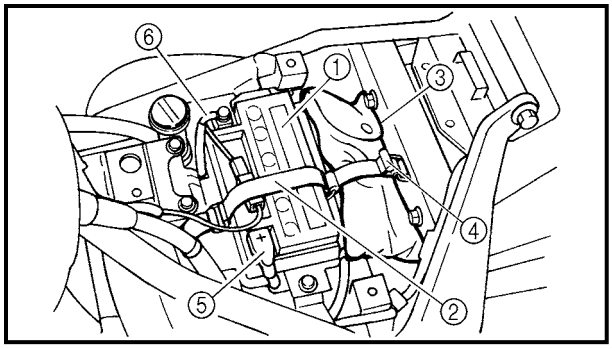

8. Install:
   - battery ①
   - battery holder ②
   - tool kit ③
   - tool kit holder ④
9. Connect:
   - battery leads
     (to the battery terminals)

CAUTION:

First, connect the positive battery lead ⑤, then the negative battery lead ⑥.

10. Check:
    - battery terminals

CRANKCASE

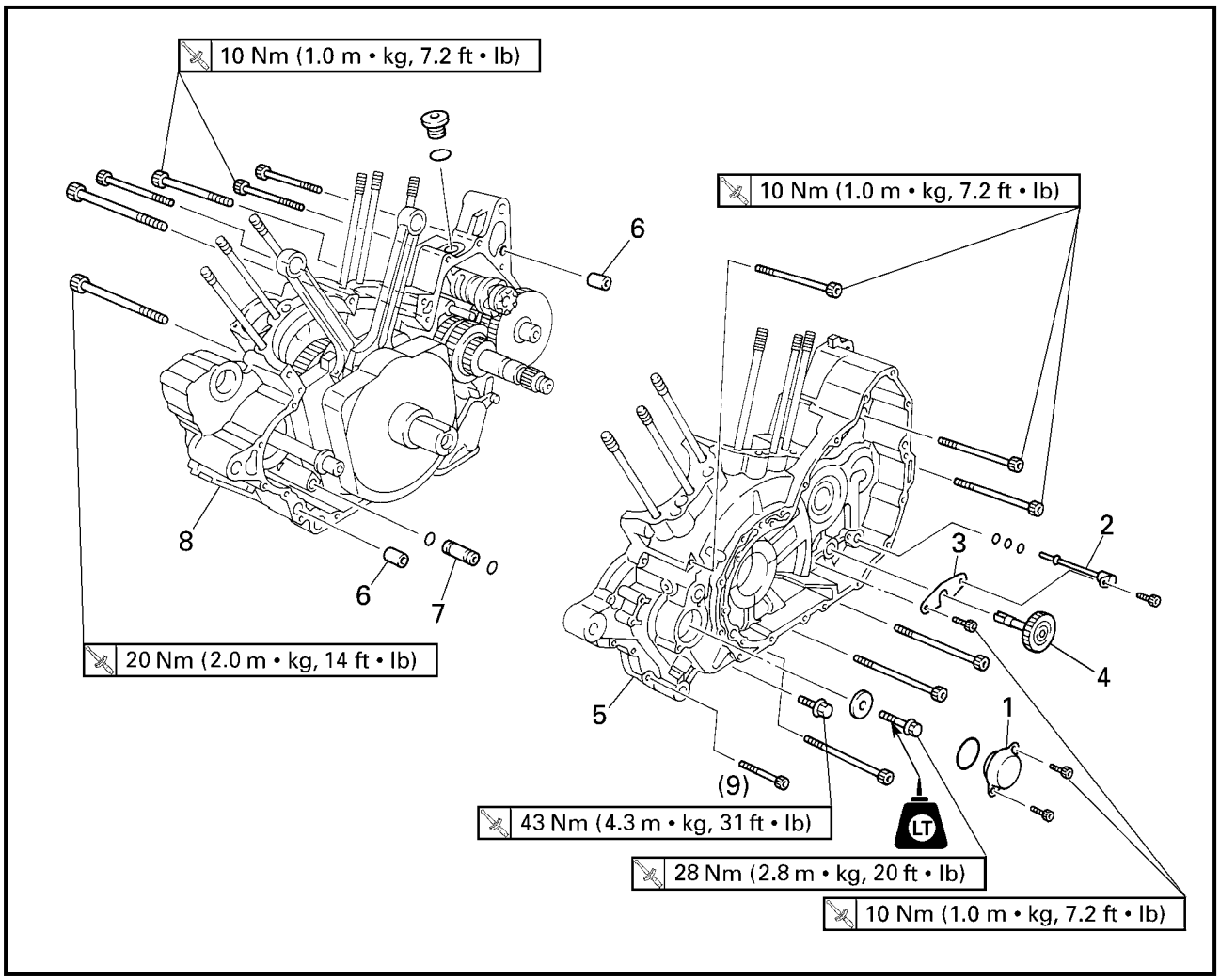

Order	Job/Part	Q'ty	Remarks
	Separating the crankcase		Remove the parts in the order listed.
	Engine		Refer to "ENGINE".
	Camshaft		Refer to "CAMSHAFTS".
	Piston		Refer to "CYLINDERS AND PISTONS".
	Shift shaft		Refer to "SHIFT SHAFT".
	Generator rotor		Refer to "GENERATOR AND STARTER CLUTCH".
1	Generator shaft end cover	1	
2	Oil delivery pipe	1	
3	Engine oil pump driven gear stopper	1	

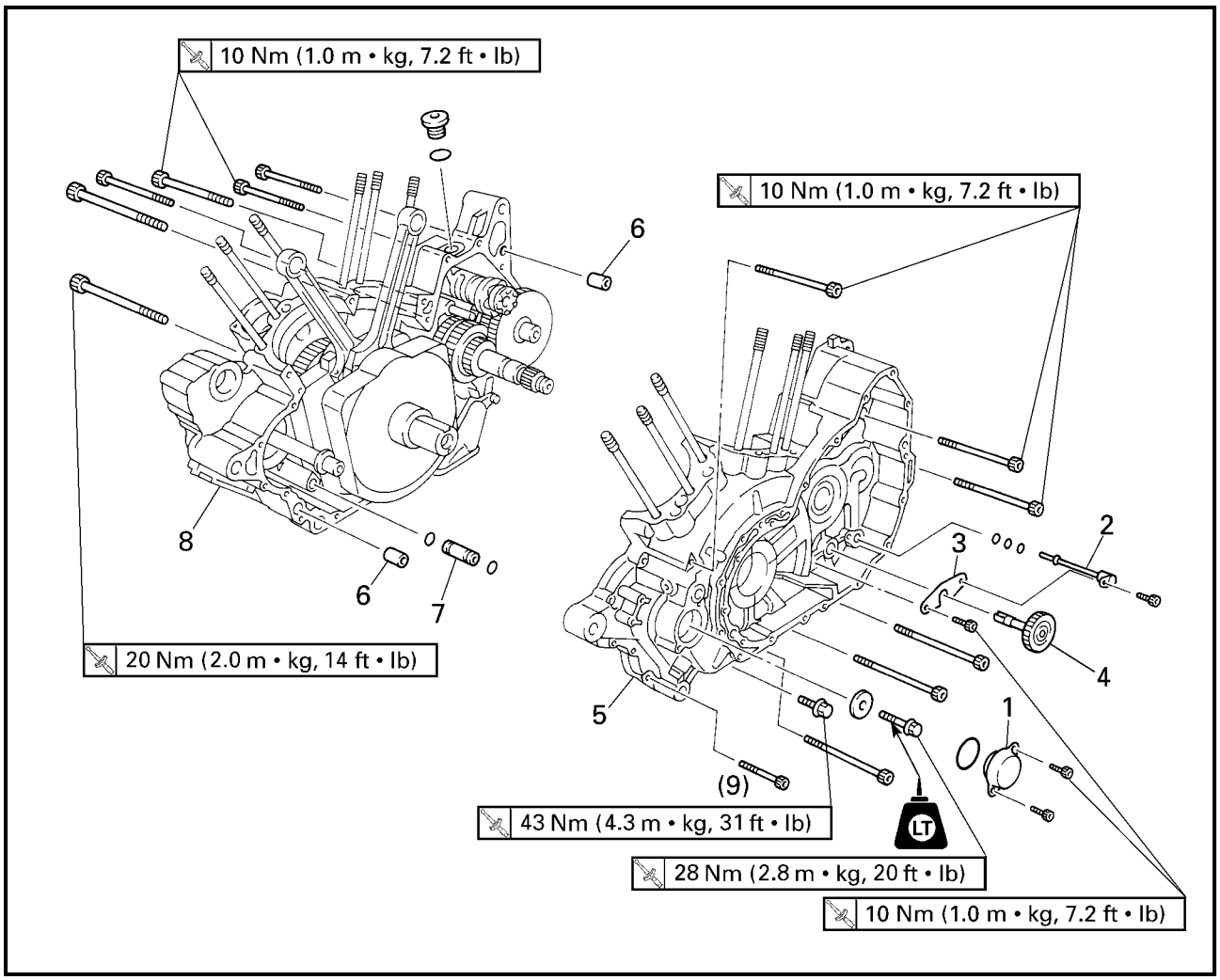

Order	Job/Part	Q'ty	Remarks
4	Engine oil pump driven gear	1	
5	Left crankcase	1	
6	Dowel	2	
7	Joint pipe	1	
8	Right crankcase	1	
			For installation, reverse the removal procedure.

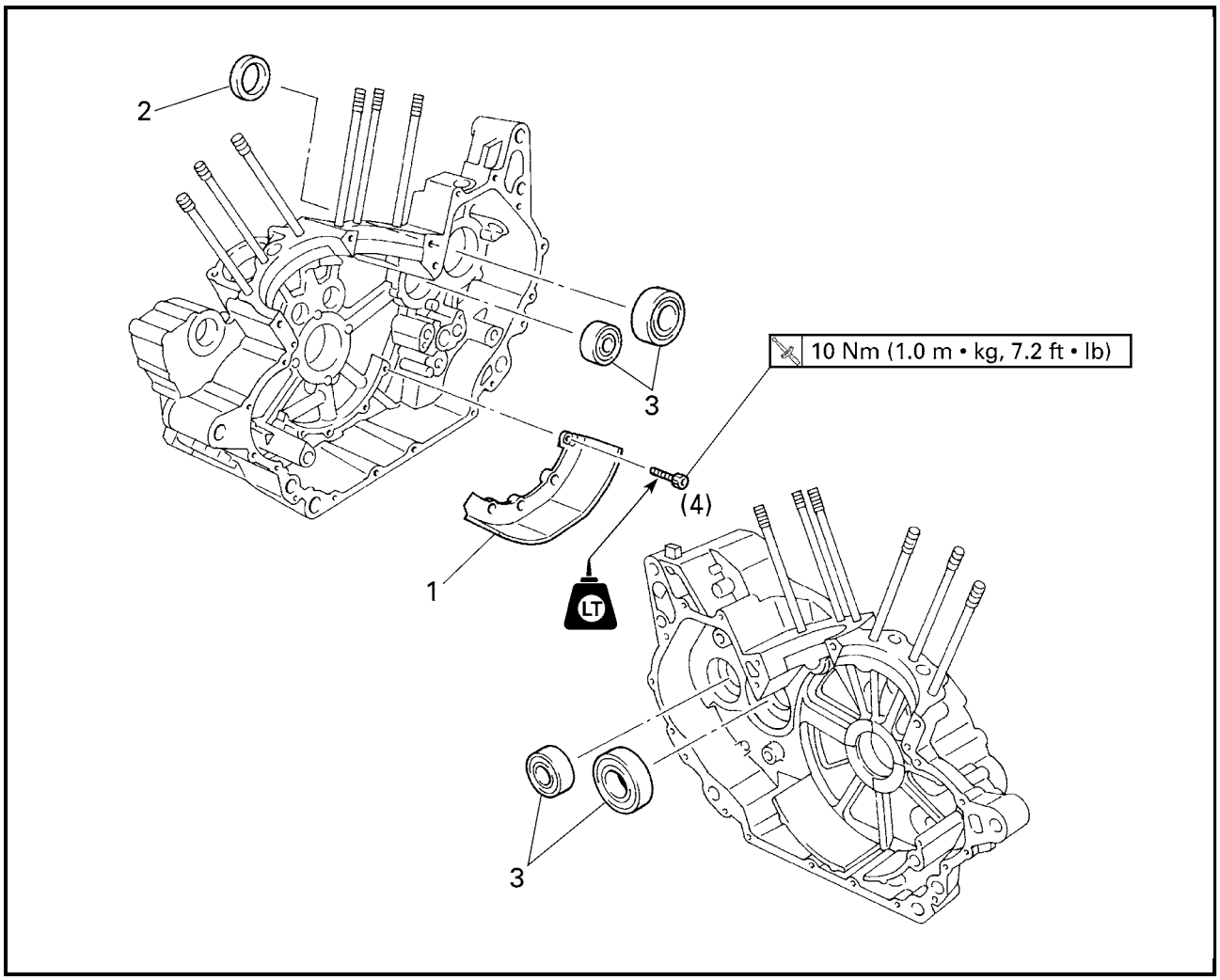

Order	Job/Part	Q'ty	Remarks
	Removing the baffle plate and bearings		Remove the parts in the order listed.
	Crankshaft		Refer to "CRANKSHAFT".
	Transmission		Refer to "TRANSMISSION".
1	Baffle plate	1	
2	Oil seal	1	
3	Bearing	4	
			Installation, reverse the removal procedure.

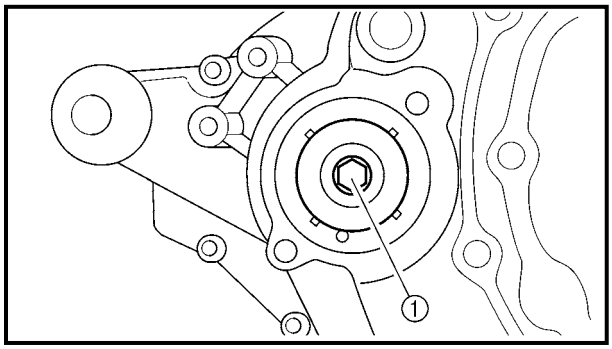

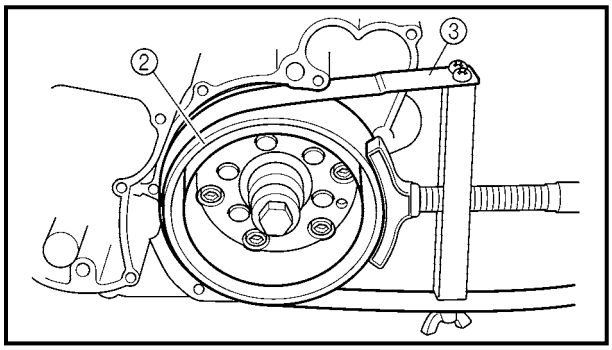

EAS00386
DISASSEMBLING THE CRANKCASE

NOTE:
Loosen the generator shaft bolt before removing the generator rotor.

1. Remove:
   - generator shaft bolt ①

NOTE:
While the holding the generator rotor ② with the sheave holder ③, loosen the generator shaft bolt.

Sheave holder
YS-01880

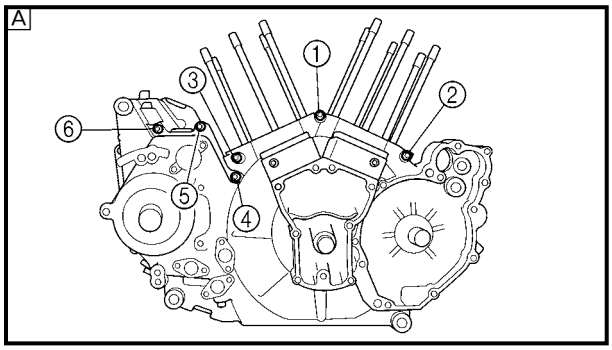

2. Remove:
   - crankcase bolts

NOTE:
- Loosen each bolt 1/4 of a turn at a time, in stages and in a crisscross pattern. After all of the bolts are fully loosened, remove them.
- Loosen the bolts in decreasing numerical order (refer to the numbers in the illustration).

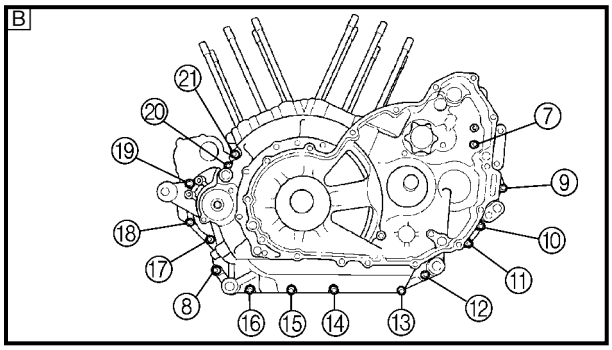

A Right crankcase
B Left crankcase
M8 × 100 mm bolts: ①, ②
M8 × 80 mm bolt: ③
M6 × 105 mm bolt: ㉑
M6 × 85 mm bolts: ⑨, ⑬
M6 × 75 mm bolts: ⑭, ⑮
M6 × 60 mm bolts: ④ ~ ⑦
M6 × 40 mm bolts: ⑧, ⑩ ~ ⑫, ⑯ ~ ⑳

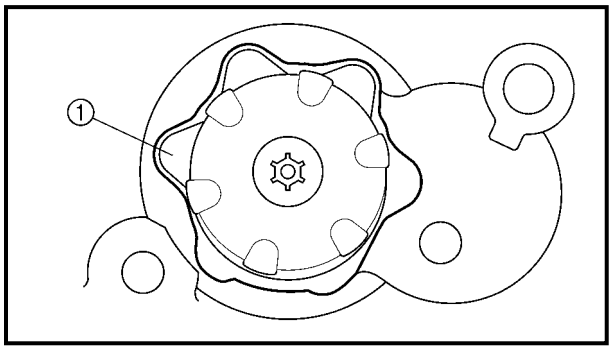

3. Turn:
   - shift drum segment

NOTE:
Turn the shift drum segment ① to the position shown in the illustration. In this position, the shift drum segment's teeth will not contact the crankcase during crankcase separation.

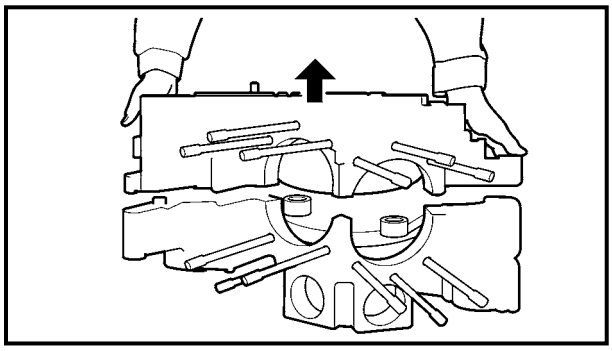

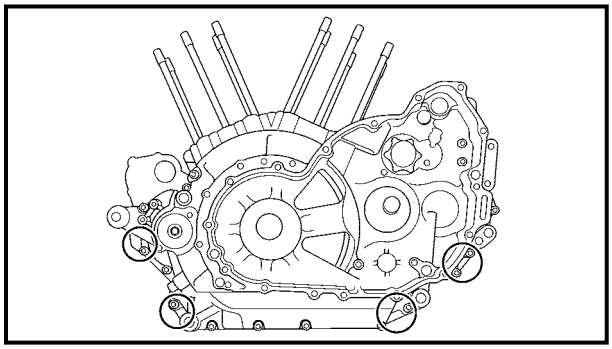

4. Remove:
   - right crankcase

CAUTION:

- **First check that the shift drum segment's teeth then remove the right crankcase.**
- **Tap on one side of the crankcase with a soft-face hammer. Tap only on reinforced portions of the crankcase, not on the crankcase mating surfaces. Work slowly and carefully and make sure the crankcase halves separate evenly.**

EAS00399
CHECKING THE CRANKCASE

1. Thoroughly wash the crankcase halves in a mild solvent.
2. Thoroughly clean all the gasket surfaces and crankcase mating surfaces.
3. Check:
   - crankcase
     Cracks/damage → Replace.
   - oil delivery passages
     Obstruction → Blow out with compressed air.

EAS00401
CHECKING THE BEARINGS AND OIL SEAL

1. Check:
   - bearings
     Clean and lubricate the bearings, then rotate the inner race with your finger.
     Rough movement → Replace.
2. Check:
   - oil seal
     Damage/wear → Replace.

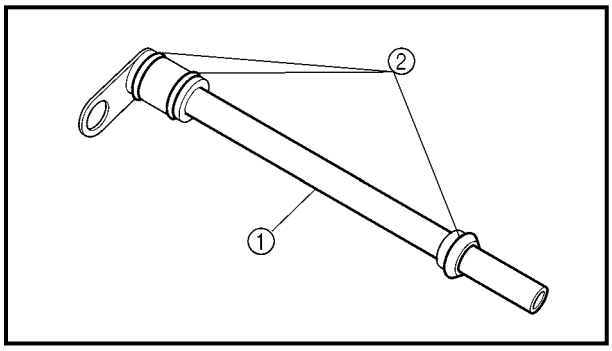

CHECKING THE OIL DELIVERY PIPE

1. Check:
   - oil delivery pipe ①
     Damage → Replace.
     Obstruction → Wash and blow out with compressed air.
   - O-rings ②
     Damage/wear → Replace.

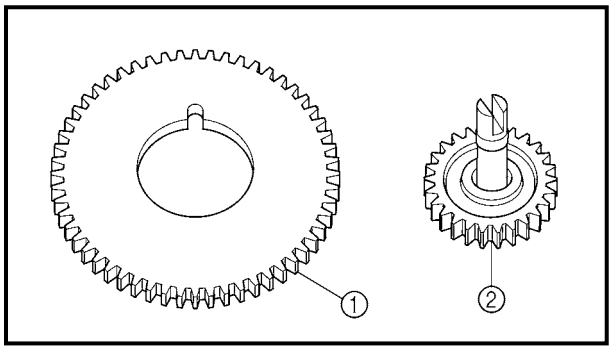

CHECKING THE ENGINE OIL PUMP DRIVE

1. Check:
   - oil pump drive gear ①
   - oil pump driven gear ②
     Chips/pitting/roughness/wear → Replace the defective part(s).

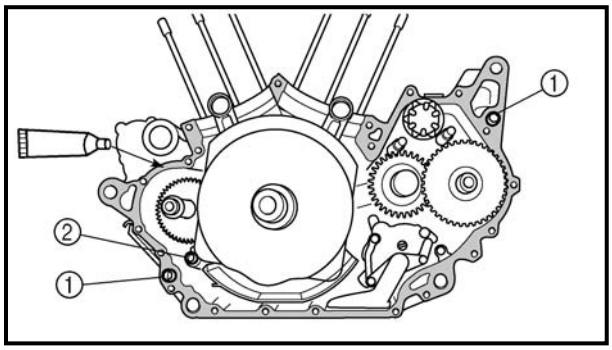

EAS00416

ASSEMBLING THE CRANKCASE

1. Apply:
   - sealant
     (onto the crankcase mating surfaces)

	Quick Gasket® **ACC-11001-05-01**

NOTE:

Do not allow any sealant to come into contact with the oil gallery.

2. Install:
   - dowel pins ①
   - joint pipe ②

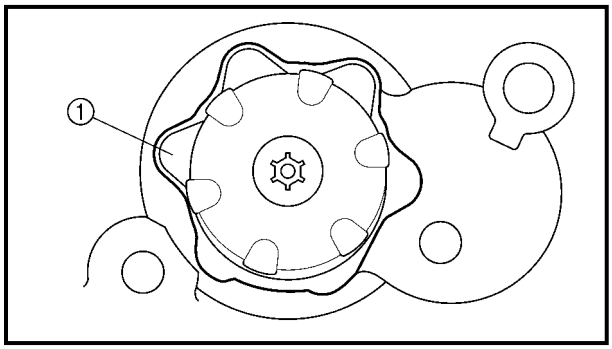

3. Install:
   - left crankcase
     (onto the right crankcase)

NOTE:

- Turn the shift drum segment ① to the position shown in the illustration. In this position, the shift drum segment's teeth will not contact the crankcase during crankcase installation.
- Tap lightly on the left crankcase with a soft-face hammer.

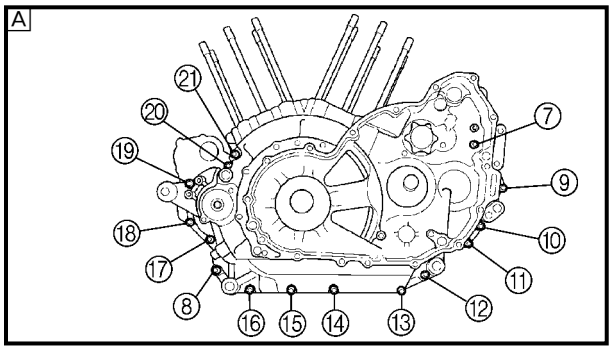

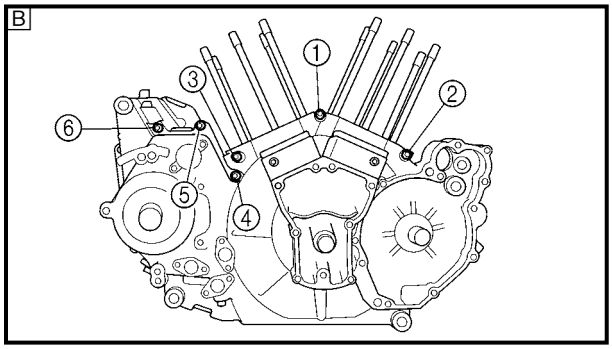

4. Install:
   - crankcase bolts

NOTE:
- Lubricate the bolt threads with engine oil.
- Tighten each bolt 1/4 of a turn at a time, in stages and in a crisscross pattern.
- Tighten the bolts in numerical order (refer to the numbers in the illustration).

A Left crankcase
B Right crankcase
M8 × 100 mm bolts: ①, ②
M8 × 80 mm bolt: ③
M6 × 105 mm bolt: ㉑
M6 × 85 mm bolts: ⑨, ⑬
M6 × 75 mm bolts: ⑭, ⑮
M6 × 60 mm bolts: ④ ~ ⑦
M6 × 40 mm bolts: ⑧, ⑩ ~ ⑫, ⑯ ~ ⑳

Bolt ① ~ ③
24 Nm (2.4 m • kg, 17 ft • lb)
Bolt ④ ~ ㉑
10 Nm (1.0 m • kg, 7.2 ft • lb)

5. Check:
   - crankshaft and transmission operation
     Rough movement → Repair.

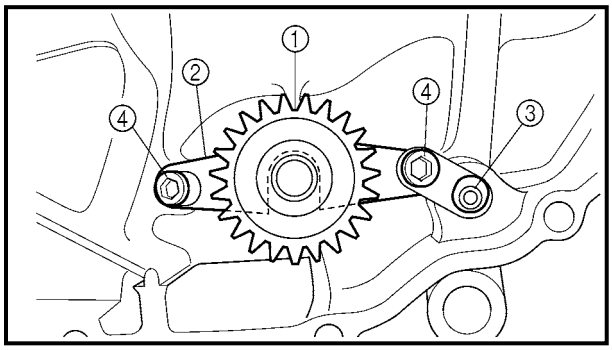

6. Install:
   - engine oil pump driven gear ①
   - engine oil pump driven gear stopper ②
   - oil delivery pipe ③
   - bolts ④ **10 Nm (1.0 m · kg, 7.2 ft · lb)**

7. Install:
   - generator rotor
     Refer to "GENERATOR AND STARTER CLUTCH".

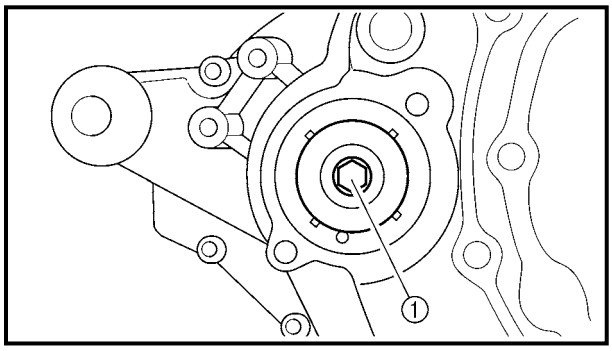

8. Install:
   - washer
   - generator shaft bolt ①

	28 Nm (2.8 m · kg, 20 ft · lb)

NOTE:
- Apply locking agent (LOCTITE®) to the threads of the generator shaft bolt.
- While holding the generator rotor ② with the sheave holder ③, tighten the generator shaft bolt.

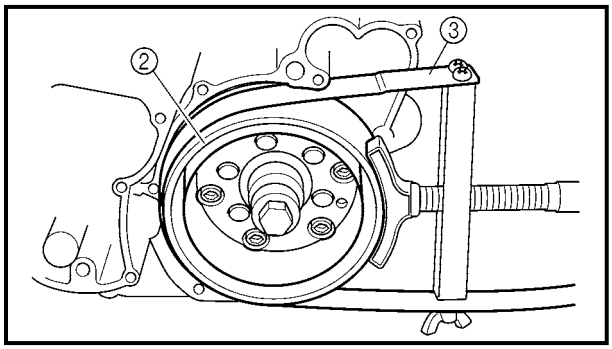

	Sheave holder **YS-01880**

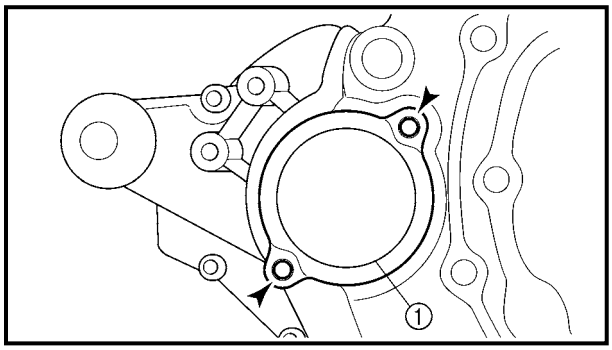

9. Install:
   - generator shaft end cover ①

10. Install:
   - shift shaft
   - clutch
     Refer to “SHIFT SHAFT” and “CLUTCH”.
   - pistons
   - cylinders
     Refer to “CYLINDERS AND PISTONS”.
   - camshaft
     Refer to “CAMSHAFTS”.
   - cylinder head
     Refer to “ROCKER ARMS, PUSH RODS AND VALVE LIFTERS”.
11. Install:
   - engine
     Refer to “ENGINE”.

ENGINE OIL PUMP

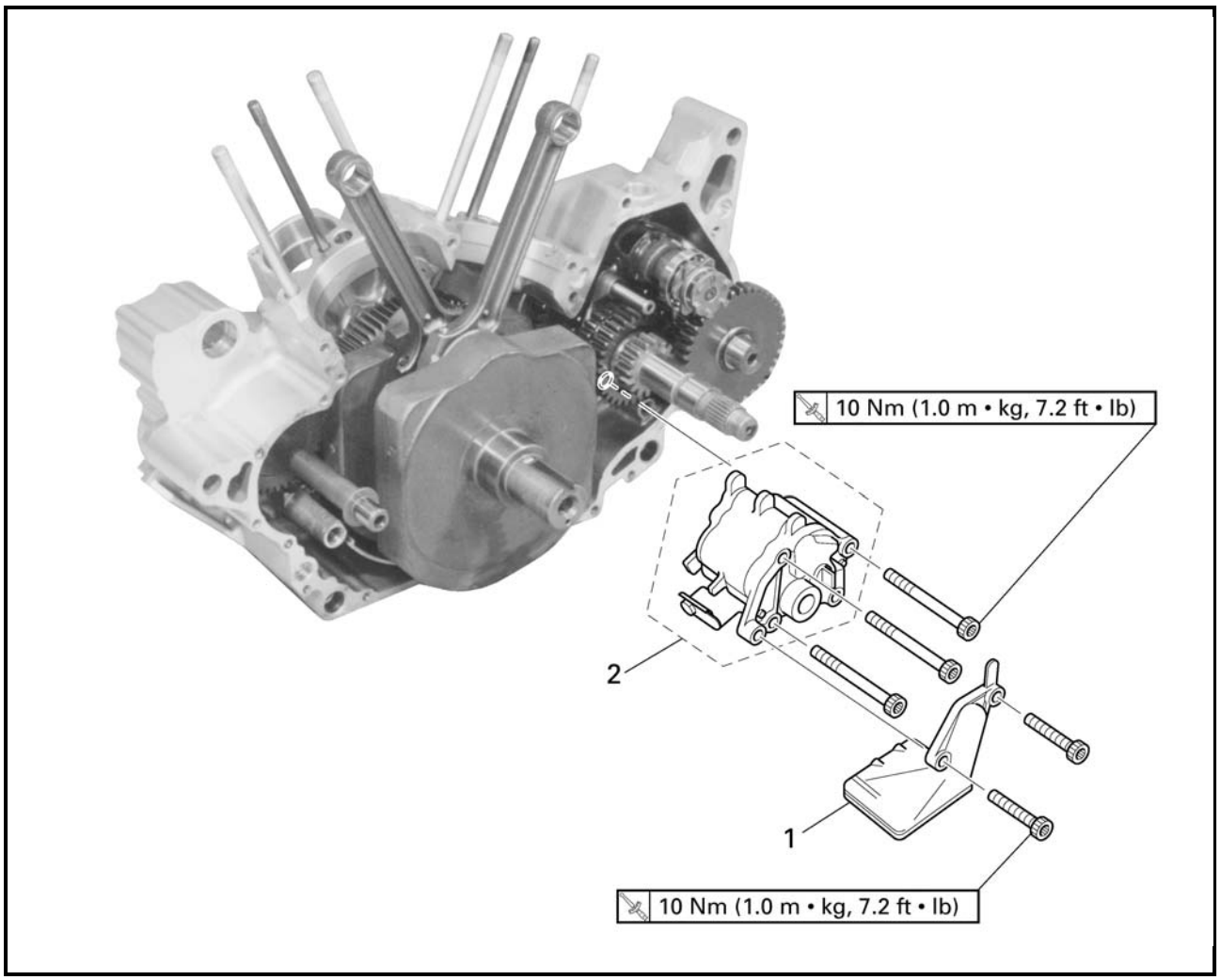

Order	Job/Part	Q'ty	Remarks
	Removing the engine oil pump		Remove the parts in the order listed.
	Crankcase		Separate. Refer to "CRANKCASE".
1	Oil strainer	1	
2	Engine oil pump assembly	1	
			Installation, reverse the removal procedure.

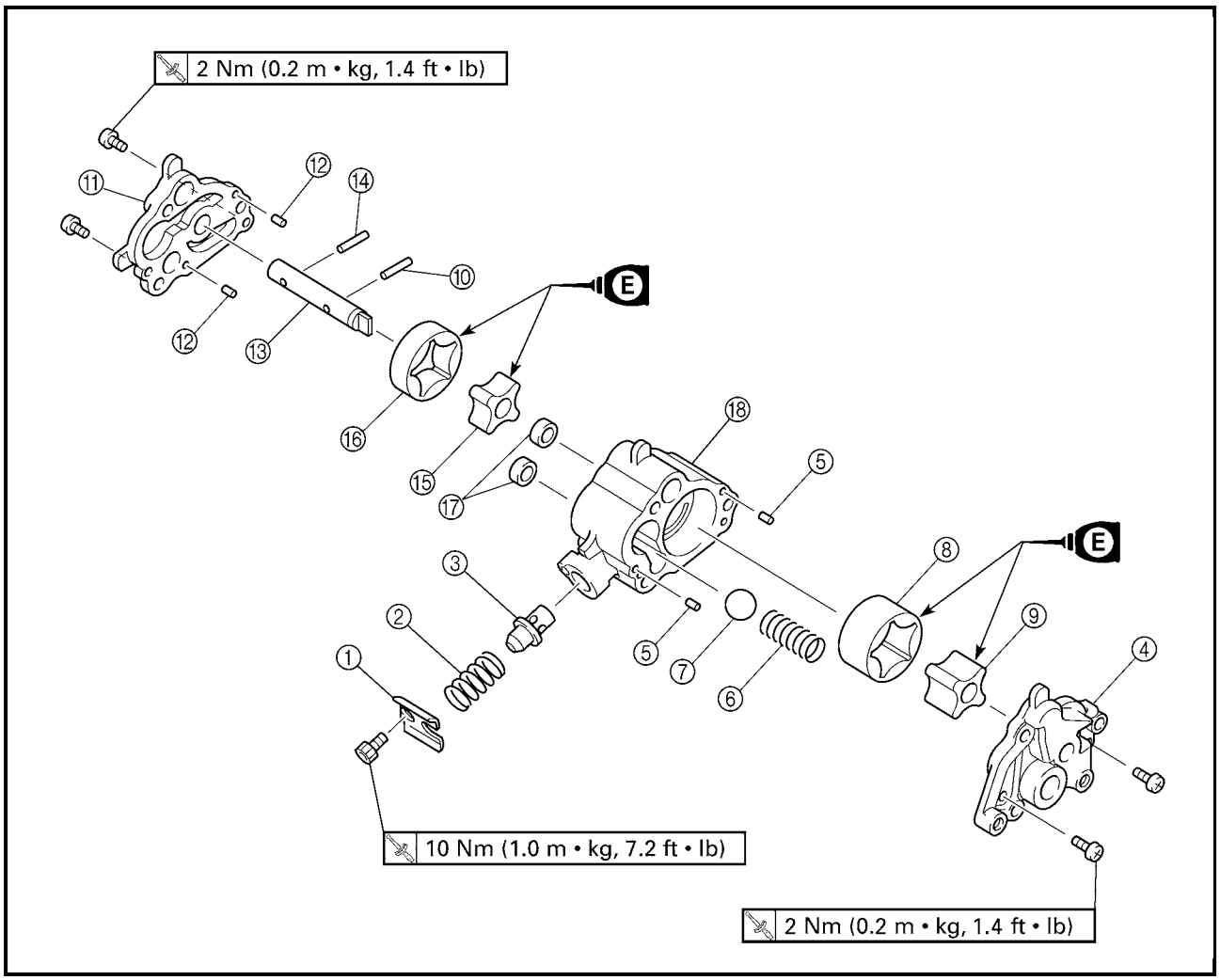

Order	Job/Part	Q'ty	Remarks
	Disassembling the engine oil pump		Remove the parts in the order listed.
①	Spring retainer	1	
②	Spring	1	
③	Relief valve	1	
④	Oil pump housing cover 1	1	
⑤	Pin	2	
⑥	Spring	1	
⑦	Ball	1	
⑧	Oil pump outer rotor 1	1	
⑨	Oil pump inner rotor 1	1	
⑩	Pin	1	

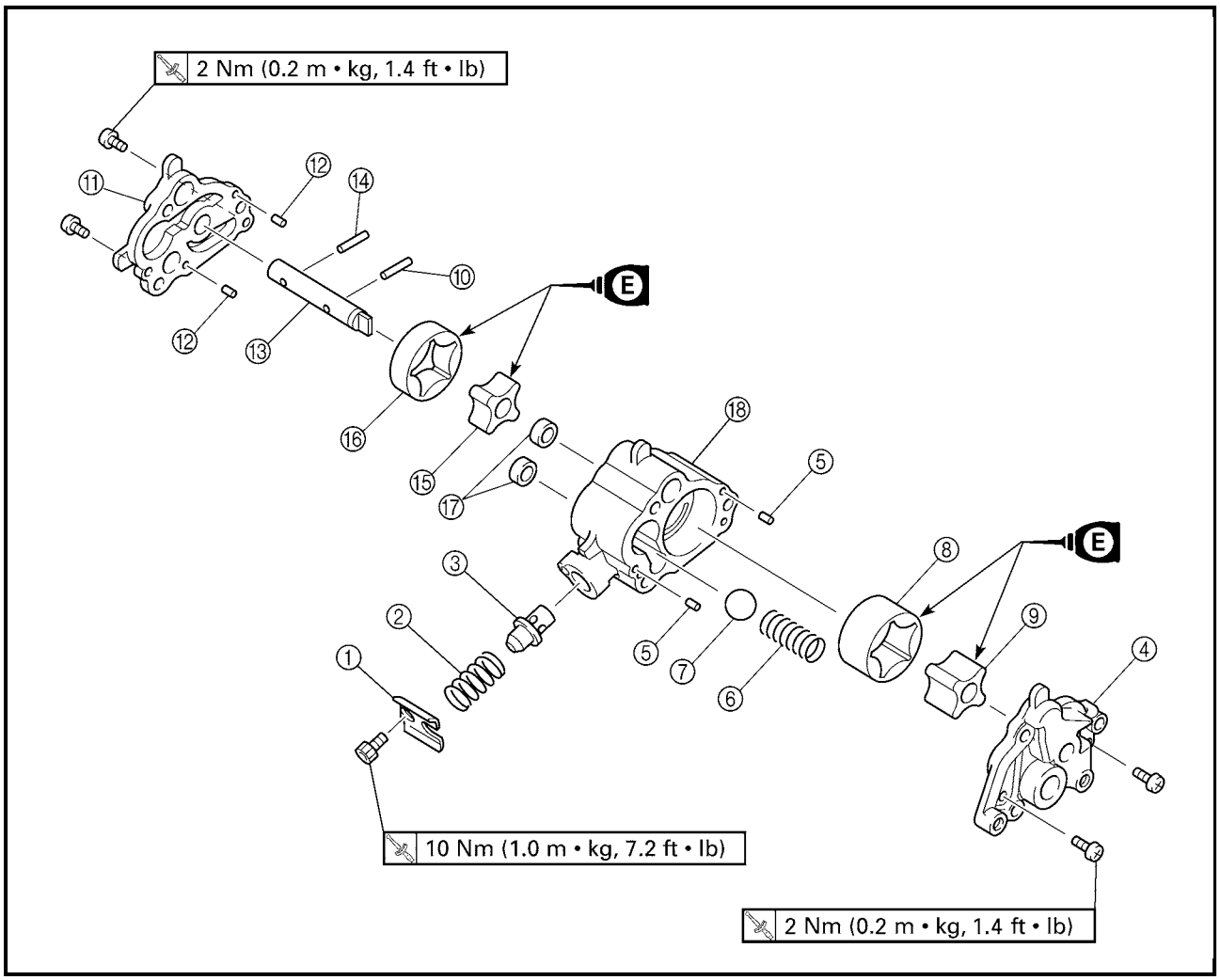

Order	Job/Part	Q'ty	Remarks
⑪	Oil pump housing cover 2	1	
⑫	Pin	2	
⑬	Oil pump shaft	1	
⑭	Pin	1	
⑮	Oil pump inner rotor 2	1	
⑯	Oil pump outer rotor 2	1	
⑰	Oil seal	2	
⑱	Oil pump housing	1	
			For assembly, reverse the disassembly procedure.

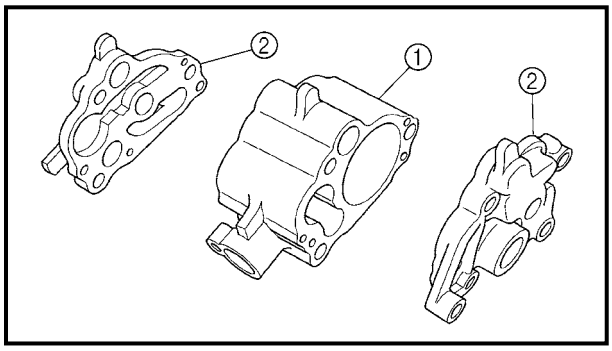

EAS00363
CHECKING THE OIL PUMP

1. Check:
   - oil pump housing ①
   - oil pump housing covers ②
     Cracks/damage/wear → Replace the defective part(s).

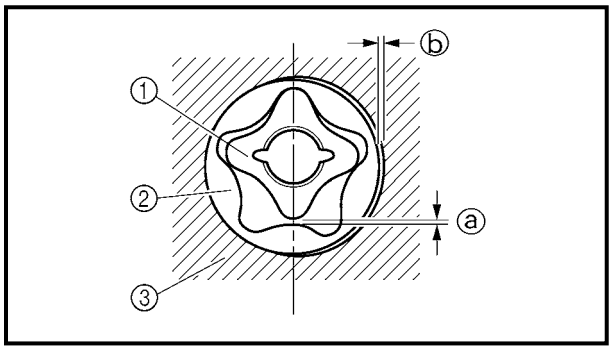

2. Measure:
   - inner rotor-to-outer rotor tip clearance ⓐ
   - outer rotor-to-oil pump housing clearance ⓑ
     Out of specification → Replace the oil pump.

① Inner rotor
② Outer rotor
③ Oil pump housing

Inner rotor-to-outer rotor tip clearance
0 ~ 0.12 mm (0 ~ 0.005 in)
Outer rotor-to-oil pump housing clearance (feed pump)
0.03 ~ 0.08 mm (0.001 ~ 0.003 in)
Outer rotor-to-oil pump housing clearance (scavenging pump)
0.06 ~ 0.11 mm (0.001 ~ 0.004 in)

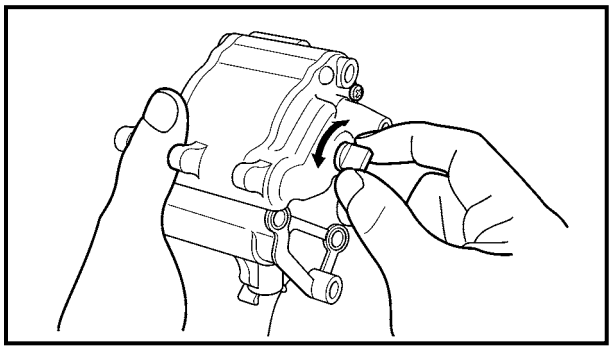

3. Check:
   - oil pump operation
     Rough movement → Repeat steps (1) and (2) or replace the defective part(s).

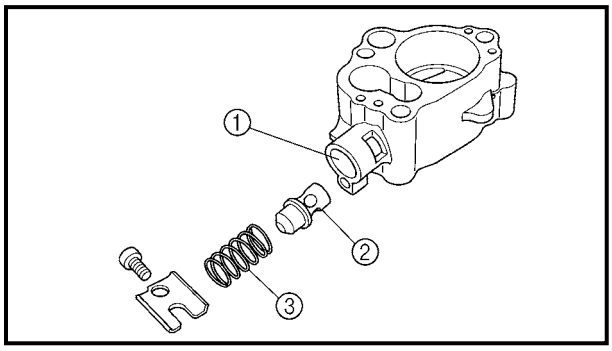

EAS00365
CHECKING THE RELIEF VALVE

1. Check:
   - relief valve body ①
   - relief valve ②
   - spring ③
     Damage/wear → Replace the defective part(s).

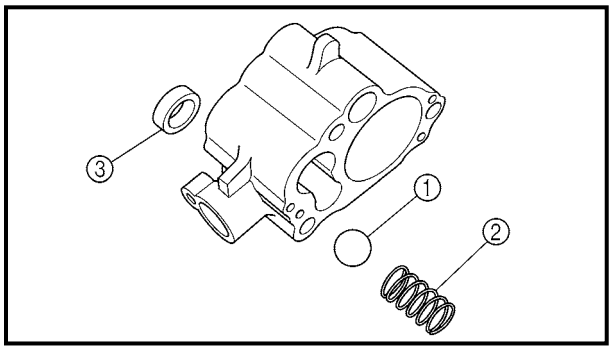

2. Check:
   - ball ①
   - spring ②
   - oil seal ③
     Damage/wear → Replace the defective part(s).

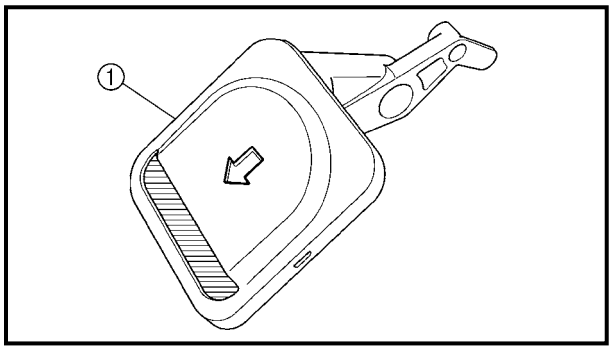

EAS00368
CHECKING THE OIL STRAINER

1. Check:
   - oil strainer ①
     Damage → Replace.
     Contaminants → Clean with engine oil.

EAS00374
ASSEMBLING THE OIL PUMP

1. Lubricate:
   - inner rotor
   - outer rotor
   - oil pump shaft
     (with the recommended lubricant)

	Recommended lubricant **Engine oil**

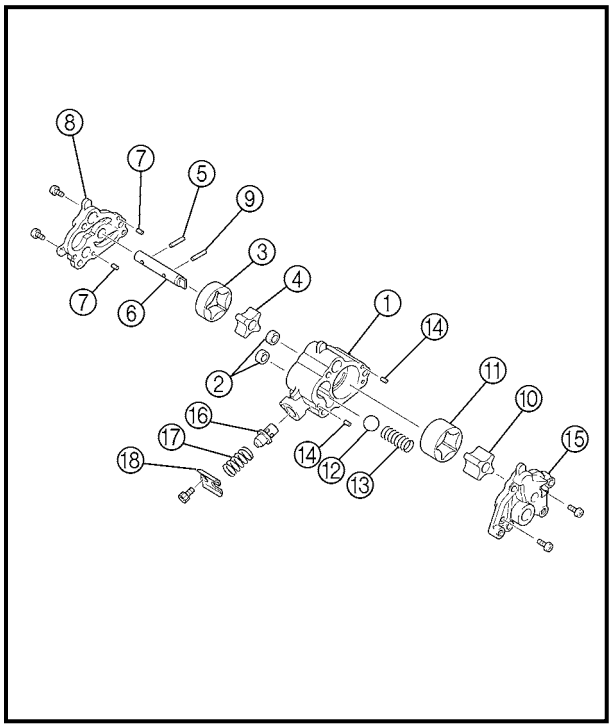

2. Install:
   - oil pump housing ①
   - oil seals ②
   - oil pump outer rotor 2 ③
   - oil pump inner rotor 2 ④
   - pin ⑤
   - oil pump shaft ⑥
   - pins ⑦
   - oil pump housing cover 2 ⑧

     2 Nm (0.2 m · kg, 1.4 ft · lb)
   - pin ⑨
   - oil pump inner rotor 1 ⑩
   - oil pump outer rotor 1 ⑪
   - ball ⑫
   - spring ⑬
   - pins ⑭
   - oil pump housing cover 1 ⑮

     2 Nm (0.2 m · kg, 1.4 ft · lb)
   - relief valve ⑯

- spring ⑰
- spring retainer ⑱

10 Nm (1.0 m · kg, 7.2 ft · lb)

NOTE:

When installing the inner rotor, align the pin in the oil pump shaft with the groove in the inner rotor.

3. Check:
   - oil pump operation
     Refer to “CHECKING THE OIL PUMP”.

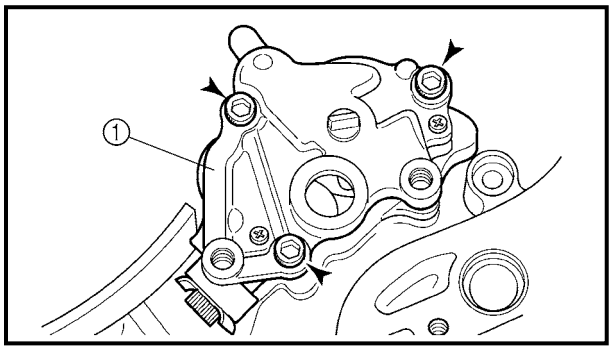

EAS00376

INSTALLING THE OIL PUMP

1. Install:
   - oil pump ① 10 Nm (1.0 m · kg, 7.2 ft · lb)

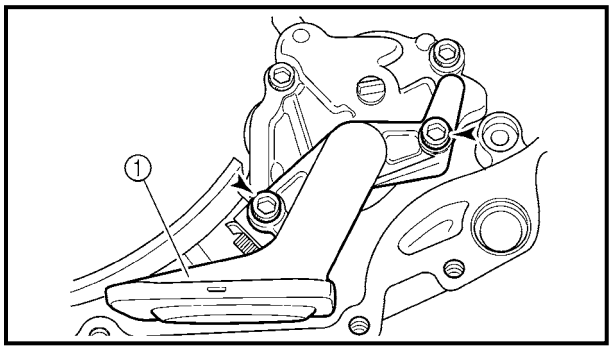

EAS00378

INSTALLING THE OIL STRAINER

1. Install:
   - oil strainer ①

10 Nm (1.0 m · kg, 7.2 ft · lb)

NOTE:

The arrow ⓐ on the oil strainer cover must point towards the rear of the engine.

CRANKSHAFT AND CONNECTING RODS

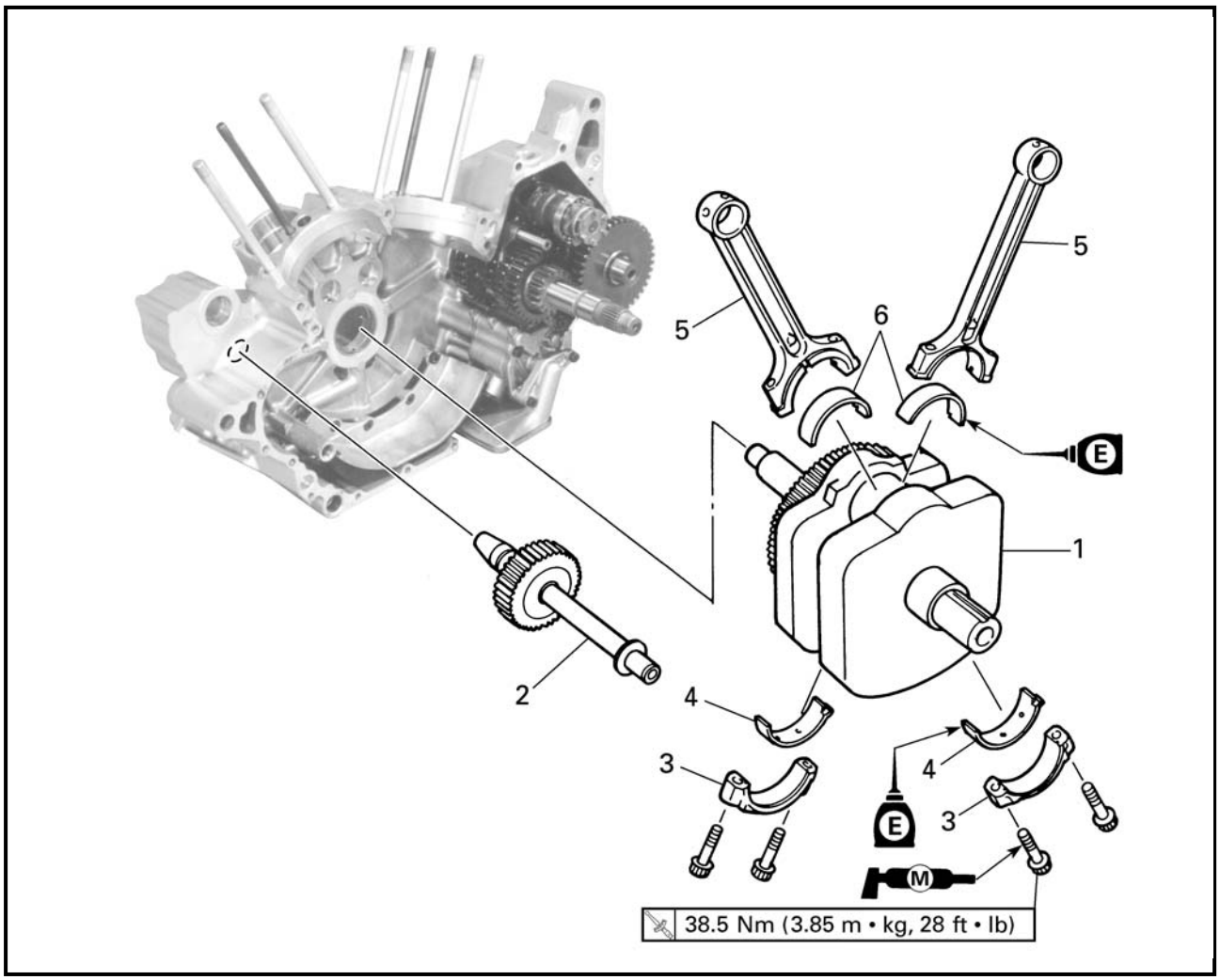

Order	Job/Part	Q'ty	Remarks
	Removing the crankshaft and connecting rods		Remove the parts in the order listed.
	Crankcase		Separate. Refer to "CRANKCASE".
1	Crankshaft	1	
2	Generator shaft	1	
3	Connecting rod cap	2	
4	Big end lower bearing	2	
5	Connecting rod	2	
6	Big end upper bearing	2	
			For installation, reverse the removal procedure.

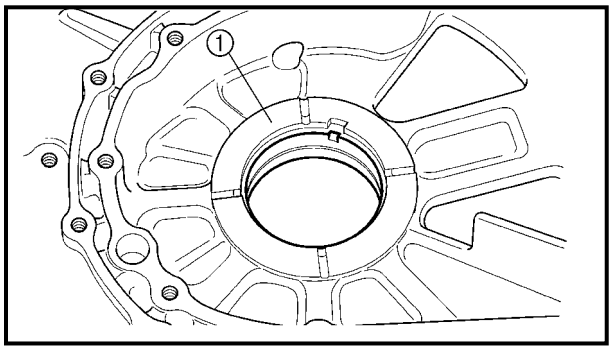

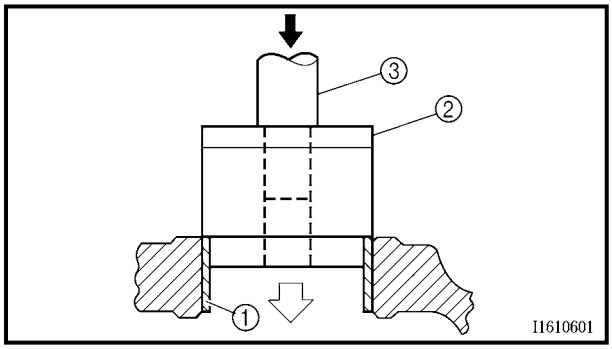

REMOVING THE CRANKSHAFT

1. Remove:
   - crankshaft journal bearing ①

NOTE:

Remove the crankshaft journal bearing with the bearing remover and installer ② and bearing driver ③.

Bearing remover and installer
YM-28898
Bearing driver
YM-04058

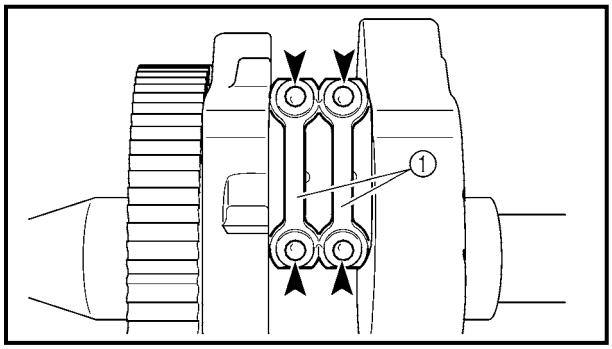

EAS00391

REMOVING THE CONNECTING RODS

1. Remove:
   - connecting rod caps ①
   - connecting rods
   - big end bearings

NOTE:

Identify the position of each big end bearing so that it can be reinstalled in its original place.

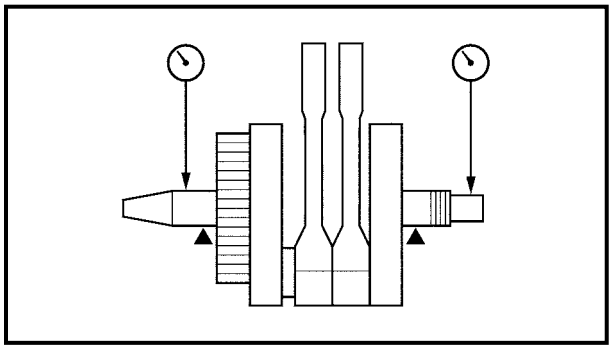

EAS00398

CHECKING THE CRANKSHAFT AND CONNECTING RODS

1. Measure:
   - crankshaft runout
     Out of specification → Replace the crankshaft.

Maximum crankshaft runout
0.04 mm (0.0016 in)

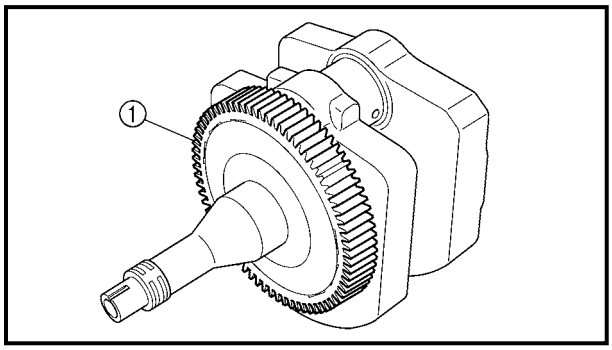

2. Check:
   - crankshaft journal surfaces
   - crankshaft pin surfaces
   - bearing surfaces
     Scratches/wear → Replace the crankshaft and bearings.
   - generator shaft drive gear ①
     Damage/wear → Replace the crankshaft.

3. Measure:
   - crankshaft pin-to-big end bearing clearance
     Out of specification → Replace the big end bearings.

Crankshaft pin-to-big end bearing clearance
0.037 ~ 0.074 mm
(0.0015 ~ 0.0029 in)
<Limit>: 0.09 mm (0.0035 in)

▼▼▼▼▼▼▼▼▼▼▼▼▼▼▼▼▼▼▼▼▼▼▼▼▼▼▼▼▼▼▼▼

The following procedure applies to all of the connecting rods.

CAUTION:

Do not interchange the big end bearings and connecting rods. To obtain the correct crankshaft pin-to-big end bearing clearance and prevent engine damage, the big end bearings must be installed in their original positions.

a. Clean the big end bearings, crankshaft pins, and the inside of the connecting rod halves.

b. Install the big end upper bearing into the connecting rod and the big end lower bearing into the connecting rod cap.

NOTE:

Align the projections ⓐ on the big end bearings with the notches ⓑ in the connecting rod and connecting rod cap.

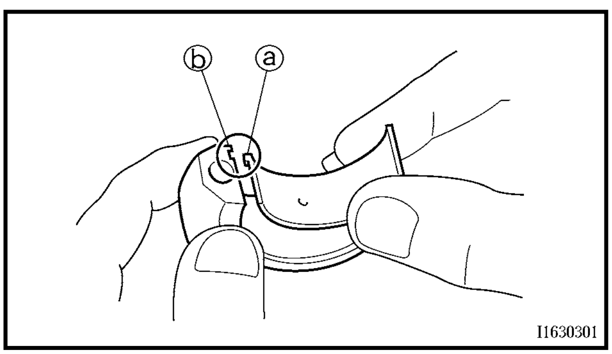

c. Put a piece of Plastigauge® ① on the crankshaft pin.

d. Assemble the connecting rod halves.

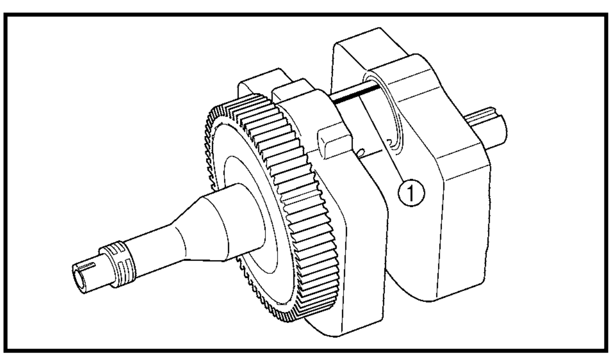

NOTE:

- Do not move the connecting rod or crankshaft until the clearance measurement has been completed.
- Lubricate the bolt threads and seats with molybdenum disulfide grease.
- Make sure the projection ⓒ on the connecting rod faces towards the left side of the crankshaft.
- Make sure the characters ⓓ on both the connecting rod and connecting rod cap are aligned.

5

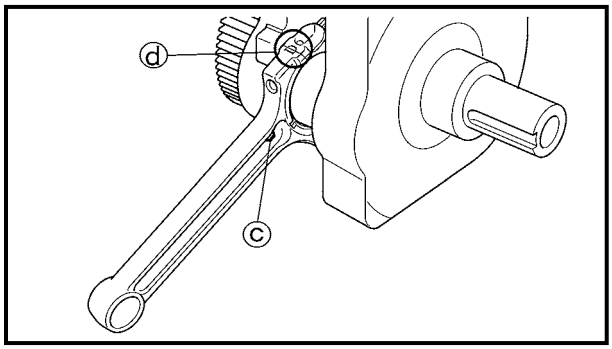

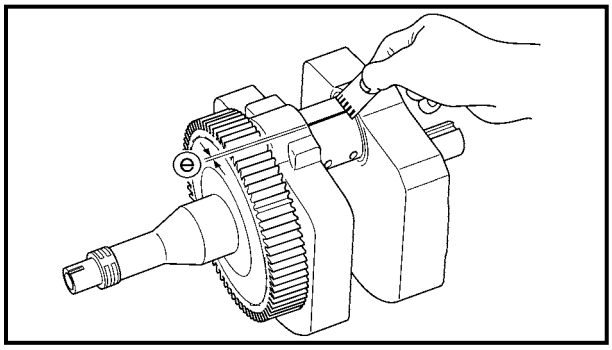

e. Tighten the connecting rod bolts.

CAUTION:

- **When tightening the connecting rod bolts, be sure to use an F-type torque wrench.**
- **Without pausing, tighten the connecting rod bolts to the specified torque. Apply continuous torque between 3.3 and 4.0 m • kg (24 and 29 ft • lb). Once you reach 3.3 m • kg (24 ft • lb), DO NOT STOP TIGHTENING until the specified torque is reached. If the tightening is interrupted between 3.3 and 4.0 m • kg (24 and 29 ft • lb), loosen the connecting rod bolts to less than 3.3 m • kg (24 ft • lb) and start again.**

Refer to "INSTALLING THE CONNECTING RODS".

	Connecting rod bolt **38.5 Nm (3.85 m • kg, 28 ft • lb)**

f. Remove the connecting rod and big end bearings.
Refer to "REMOVING THE CONNECTING RODS".

g. Measure the compressed Plastigauge® width ⓔ on each crankshaft pin.
If the crankshaft pin-to-big end bearing clearance is out of specification, select replacement big end bearings.

▲▲▲▲▲▲▲▲▲▲▲▲▲▲▲▲▲▲▲▲▲▲▲▲▲▲▲▲▲▲

5

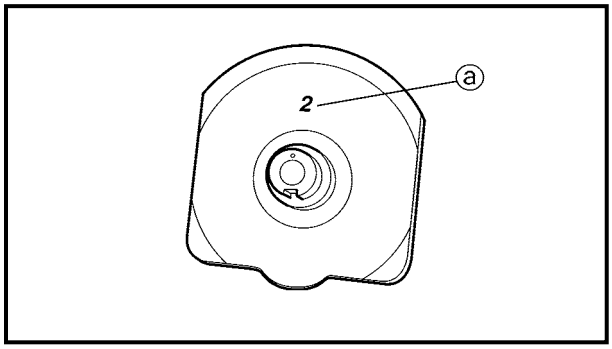

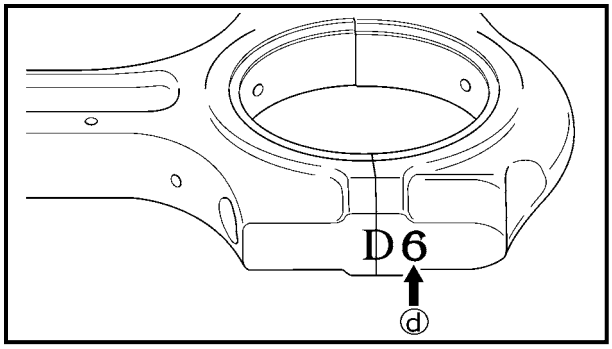

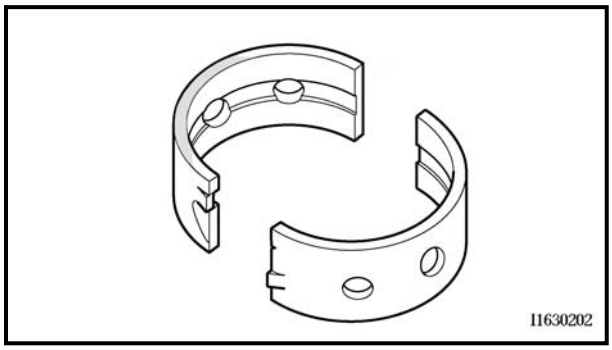

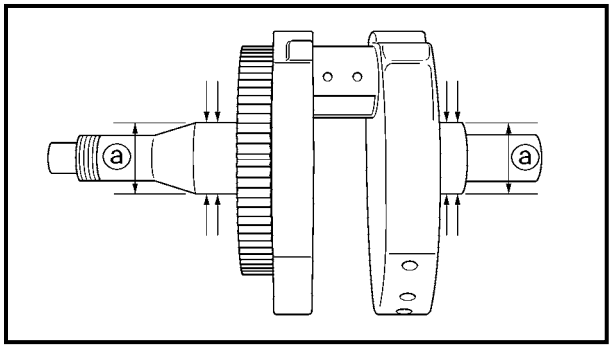

4. Select:
   - big end bearings (P_1 ~ P_2)

NOTE:
- The numbers ⓐ stamped into the crankshaft web and the numbers ⓑ on the connecting rods are used to determine the replacement big end bearing sizes.
- "P_1" ~ "P_2" refer to the bearings shown in the crankshaft illustration.

For example, if the connecting rod "P_1" and the crankshaft web "P_1" numbers are "6" and "2" respectively, then the bearing size for "P_1" is:

"P_1" (connecting rod) – "P_1" (crankshaft web) =
6 – 2 = 4 (green)

BIG END BEARING COLOR CODE	
1	blue
2	black
3	brown
4	green
5	yellow

5. Measure:
   - crankshaft journal diameter ⓐ
     Out of specification → Replace the crankshaft.

Crankshaft journal diameter
49.968 ~ 49.980 mm
(1.967 ~ 1.968 in)

NOTE:
Measure the diameter of each crankshaft journal at two places.

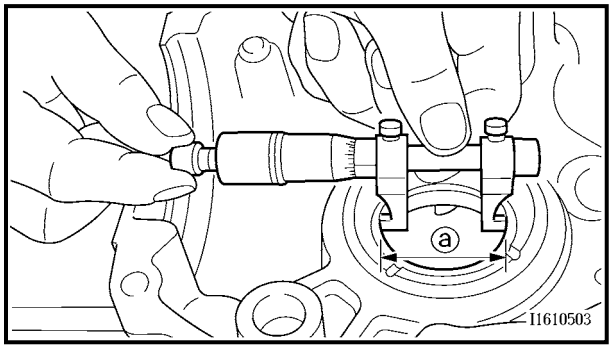

6. Measure:
   - crankshaft journal bearing inside diameter ⓐ
     Out of specification → Replace the crankcase assembly.

Crankshaft journal bearing inside diameter
50.01 ~ 50.03 mm
(1.969 ~ 1.970 in)

NOTE:
Measure the inside diameter of each crankshaft journal bearing at two places.

7. Calculate:
   - crankshaft journal-to-crankshaft journal bearing clearance
     Out of specification → Replace the crankshaft and crankshaft journal bearings as a set.

NOTE:
Calculate the clearance by subtracting the crankshaft journal diameter from the crankshaft journal bearing inside diameter.

Crankshaft journal-to-crankshaft journal bearing clearance
0.030 ~ 0.062 mm
(0.0012 ~ 0.0024 in)

INSTALLING THE CONNECTING RODS

1. Lubricate:
   - bolt threads and seats
     (with the recommended lubricant)

Recommended lubricant
Molybdenum disulfide grease

2. Lubricate:
   - crankshaft pins
   - big end bearings
   - connecting rod inner surface
     (with the recommended lubricant)

	Recommended lubricant **Engine oil**

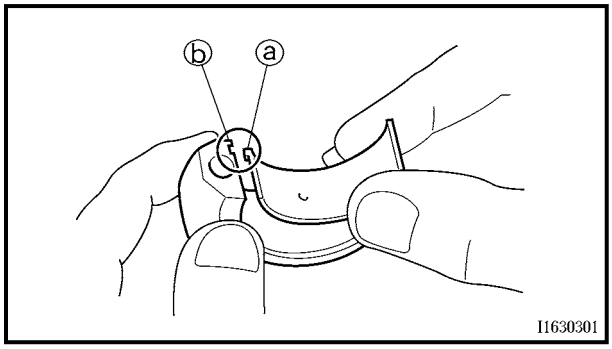

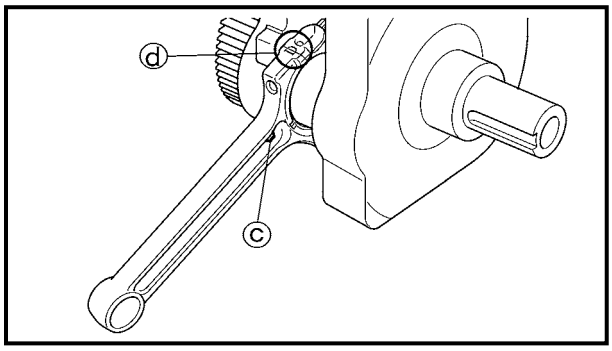

3. Install:
   - big end bearings
   - connecting rods
   - connecting rod caps
     (onto the crankshaft pins)

NOTE:
- Align the projections ⓐ on the big end bearings with the notches ⓑ in the connecting rods and connecting rod caps.
- Be sure to reinstall each big end bearing in its original place.
- Make sure the projection ⓒ on the connecting rods face towards the left side of the crankshaft.
- Make sure the characters ⓓ on both the connecting rod and connecting rod cap are aligned.

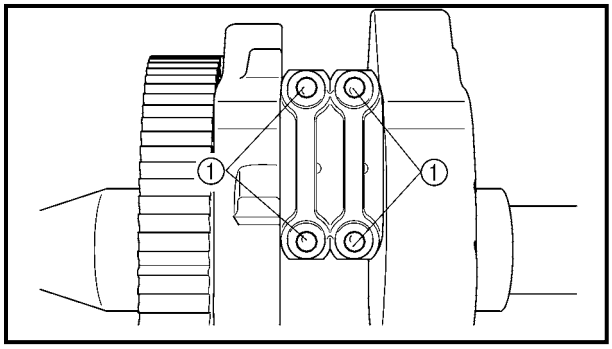

4. Tighten:
   - connecting rod bolt ①

	40 Nm (4.0 m · kg, 29 ft · lb)

CAUTION:
- **When tightening the connecting rod bolts, be sure to use an F-type torque wrench.**
- **Without pausing, tighten the connecting rod bolts to the specified torque. Apply continuous torque between 3.3 and 4.0 m • kg (24 and 29 ft • lb). Once you reach 3.3 m • kg (24 ft • lb), DO NOT STOP TIGHTENING until the specified torque is reached. If the tightening is interrupted between 3.3 and 4.0 m • kg (24 and 29 ft • lb), loosen the connecting rod bolts to less than 3.3 m • kg (24 ft • lb) and start again.**

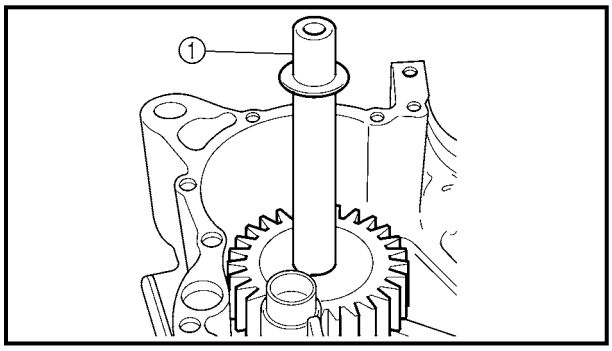

INSTALLING THE CRANKSHAFT

1. Install:
   - generator shaft ①

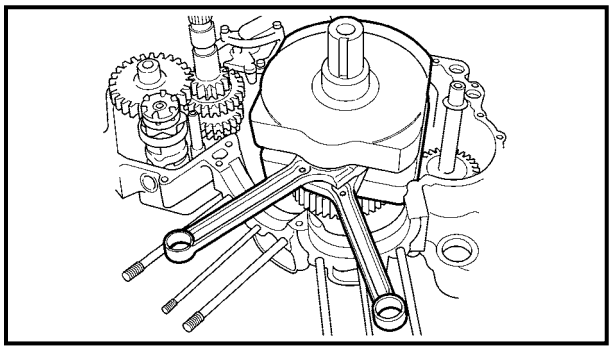

2. Install:
   - crankshaft

NOTE:

- Make sure that the generator shaft drive gear teeth and generator shaft driven gear teeth mesh correctly.
- Align the right connecting rod with the front cylinder sleeve hole.

TRANSMISSION

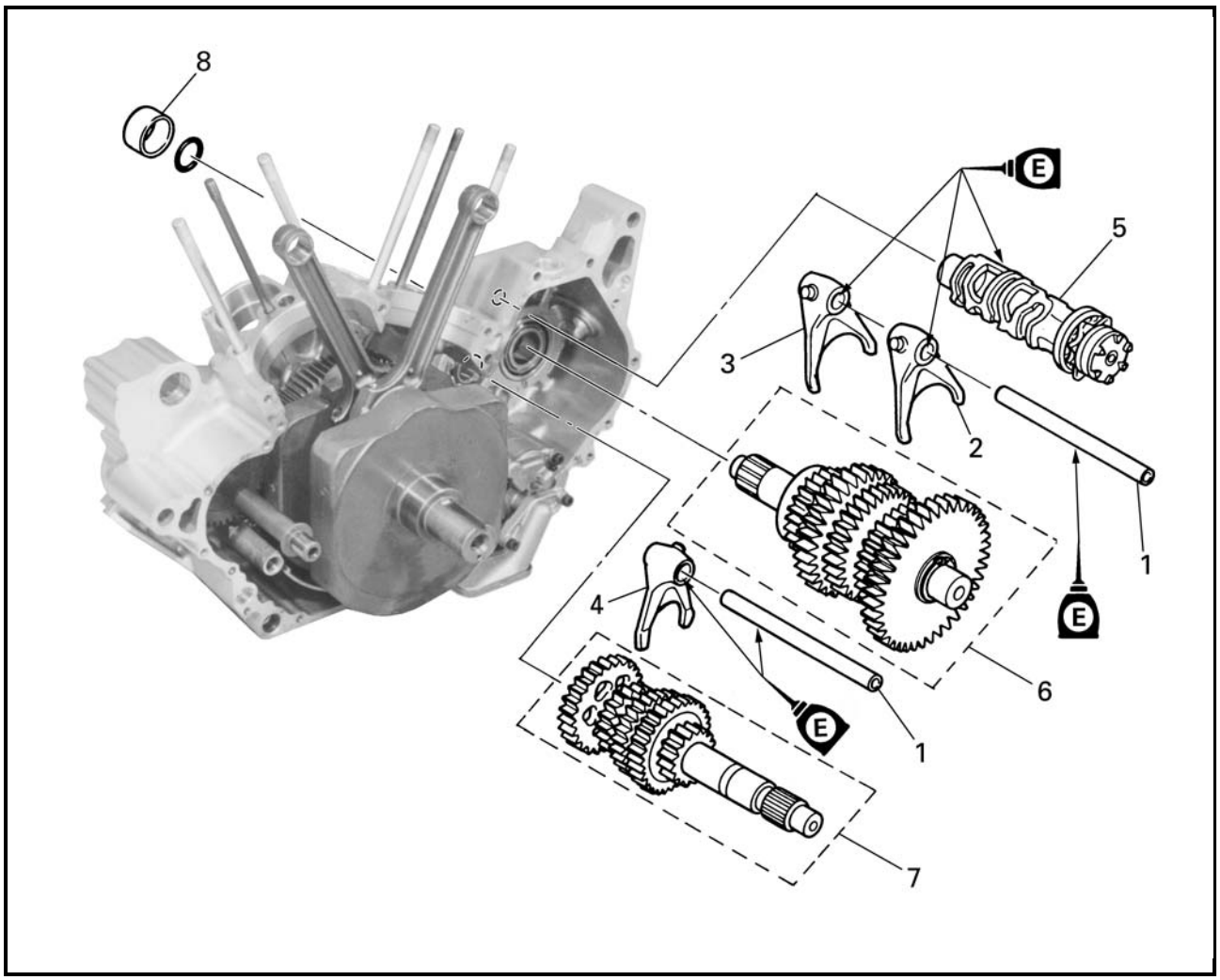

Order	Job/Part	Q'ty	Remarks
	Removing the shift forks, shift drum assembly and transmission		Remove the parts in the order listed.
	Crankcase		Separate. Refer to "CRANKCASE".
1	Shift fork guide bar	2	
2	Shift fork "L"	1	
3	Shift fork "R"	1	
4	Shift fork "C"	1	
5	Shift drum assembly	1	
6	Drive axle assembly	1	
7	Main axle assembly	1	
8	Spacer	1	
			For installation, reverse the removal procedure.

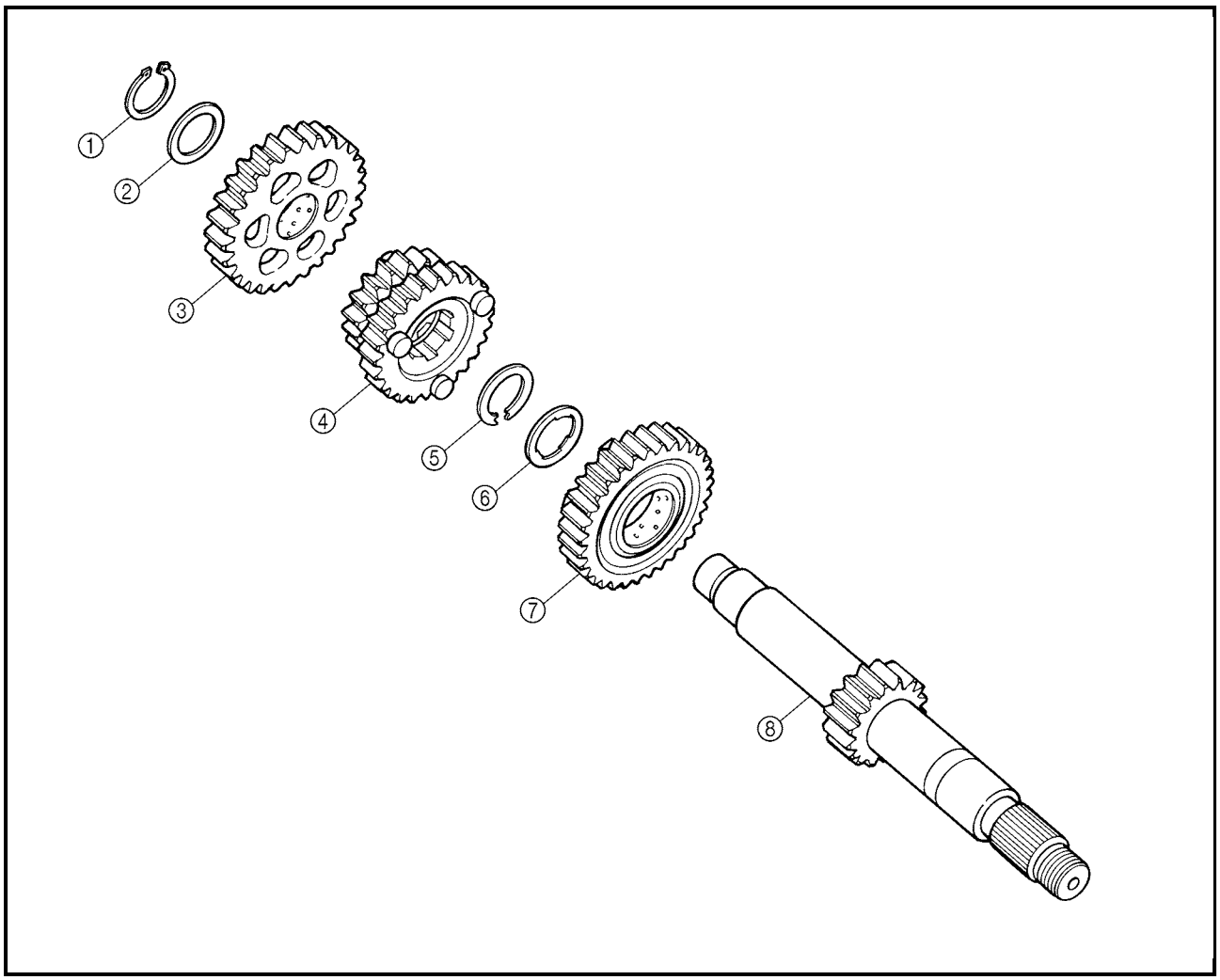

Order	Job/Part	Q'ty	Remarks
	Disassembling the main axle assembly		Remove the parts in the order listed.
①	Circrip	1	
②	Washer	1	
③	5th pinion gear	1	
④	2nd/3rd pinion gear	1	
⑤	Circlip	1	
⑥	Washer	1	
⑦	4th pinion gear	1	
⑧	Main axle/1st pinion gear	1	
			For assembly, reverse the disassembly procedure.

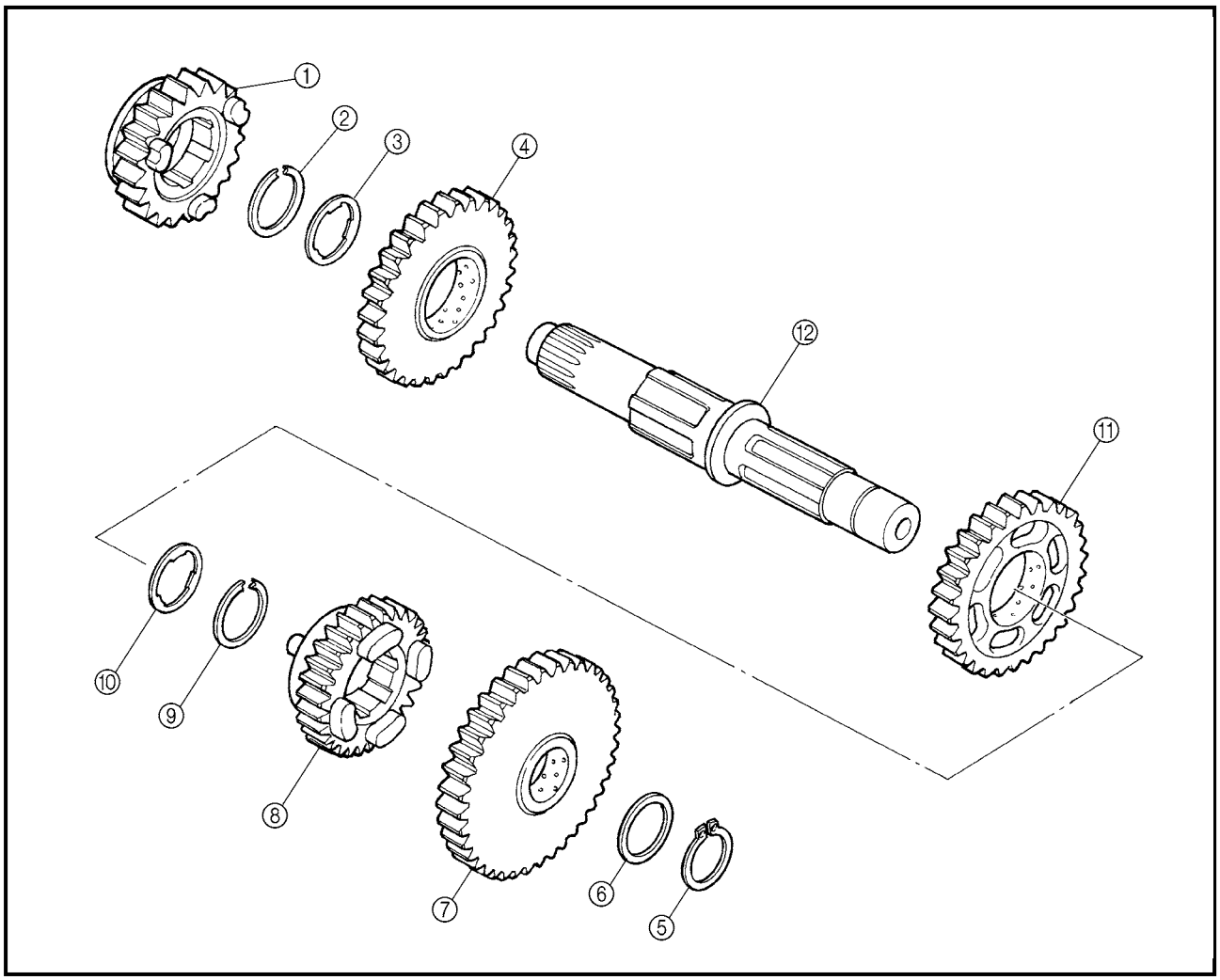

Order	Job/Part	Q'ty	Remarks
	Disassembling the drive axle assembly		Remove the parts in the order listed.
①	5th wheel gear	1	
②	Circlip	1	
③	Washer	1	
④	2nd wheel gear	1	
⑤	Circlip	1	
⑥	Washer	1	
⑦	1st wheel gear	1	
⑧	4th wheel gear	1	
⑨	Circlip	1	
⑩	Washer	1	
⑪	3rd wheel gear	1	
⑫	Drive axle	1	
			For assembly, reverse the disassembly procedure.

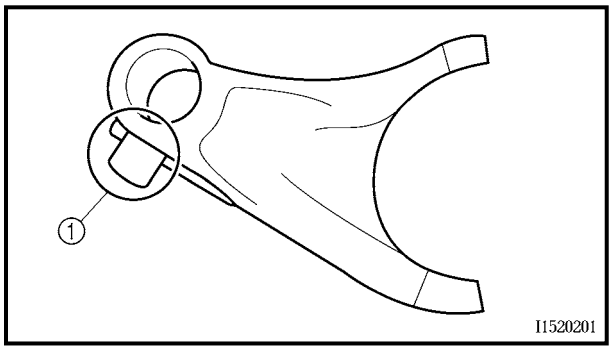

EAS00421
CHECKING THE SHIFT FORKS

The following procedure applies to all of the shift forks.

1. Check:
   - shift fork cam follower ①
   - shift fork pawl ②
     Bends/damage/scoring/wear → Replace the shift fork.

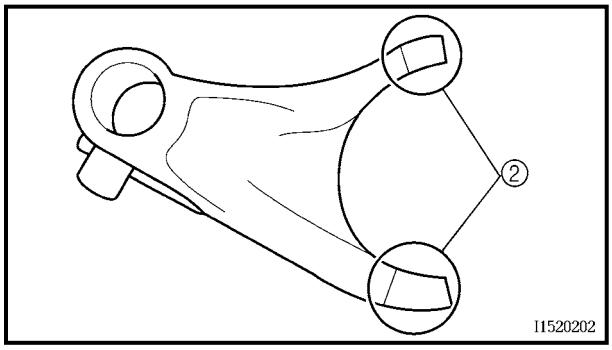

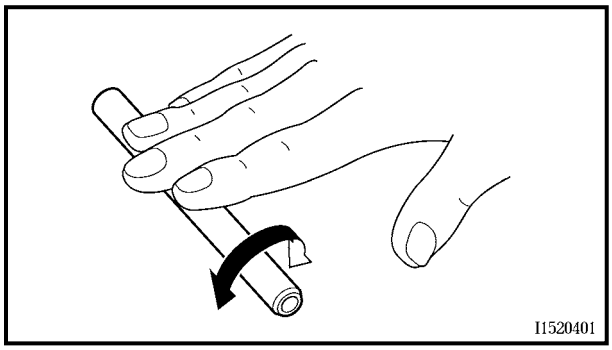

2. Check:
   - shift fork guide bar
     Roll the shift fork guide bar on a flat surface.
     Bends → Replace.

⚠ WARNING

Do not attempt to straighten a bent shift fork guide bar.

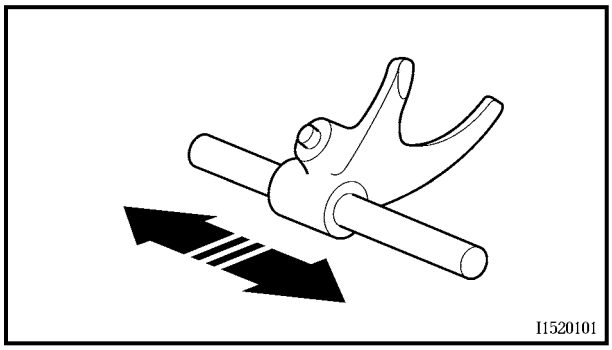

3. Check:
   - shift fork movement
     (along the shift fork guide bar)
     Rough movement → Replace the shift fork(s) and shift fork guide bar(s) as a set.

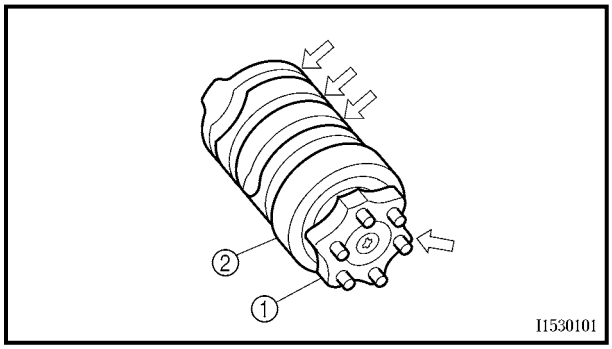

EAS00422
CHECKING THE SHIFT DRUM ASSEMBLY

1. Check:
   - shift drum grooves
     Damage/scratches/wear → Replace the shift drum assembly.
   - shift drum segment ①
     Damage/wear → Replace the shift drum assembly.
   - shift drum bearing ②
     Damage/pitting → Replace the shift drum assembly.

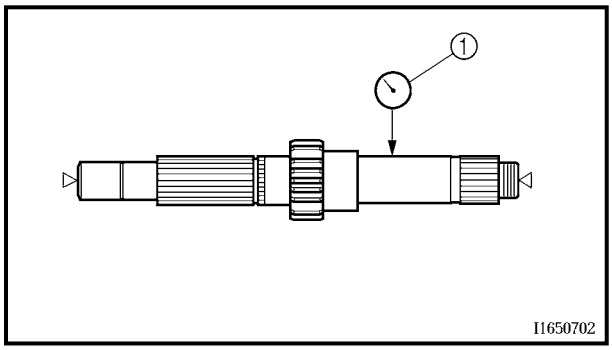

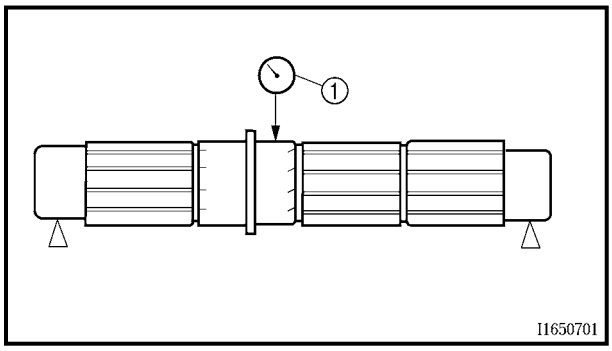

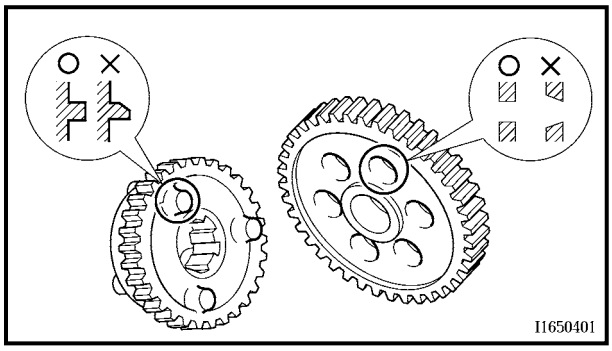

EAS00425

CHECKING THE TRANSMISSION

1. Measure:
   - main axle runout
     (with a centering device and dial gauge ①)
     Out of specification → Replace the main axle.

	Maximum main axle runout 0.08 mm (0.003 in)

2. Measure:
   - drive axle runout
     (with a centering device and dial gauge ①)
     Out of specification → Replace the drive axle.

	Maximum drive axle runout 0.08 mm (0.003 in)

3. Check:
   - transmission gears
     Blue discoloration/pitting/wear → Replace the defective gear(s).
   - transmission gear dogs
     Cracks/damage/rounded edges → Replace the defective gear(s).
4. Check:
   - transmission gear engagement
     (each pinion gear to its respective wheel gear)
     Incorrect → Reassemble the transmission axle assemblies.
5. Check:
   - transmission gear movement
     Rough movement → Replace the defective part(s).
6. Check:
   - circlips
     Bends/damage/looseness → Replace.

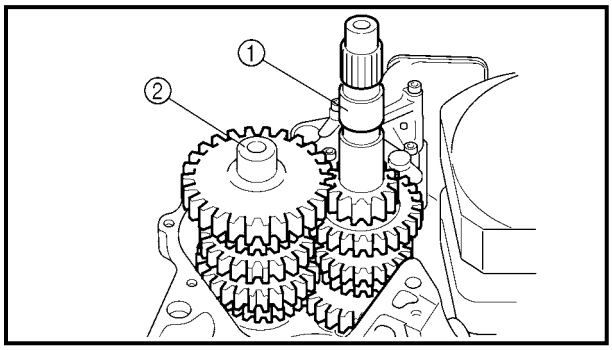

INSTALLING THE TRANSMISSION, SHIFT DRUM ASSEMBLY AND SHIFT FORKS

1. Install:
   - main axle assembly ①
   - drive axle assembly ②
   - O-ring
   - spacer

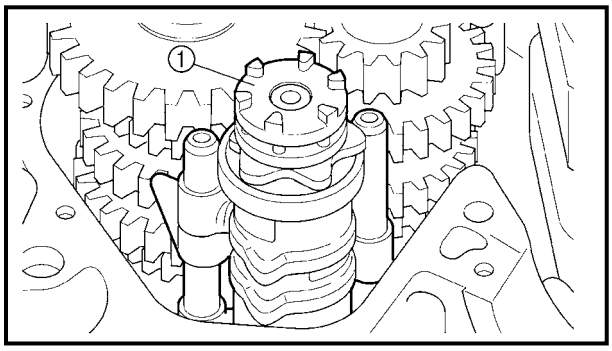

2. Install:
   - shift drum assembly ①
   - shift fork “R”
   - shift fork “C”
   - shift fork “L”
   - shift fork guide bars

NOTE:
The embossed marks on the shift forks should face towards the right side of the engine and be in the following sequence: “R”, “C”, “L”.

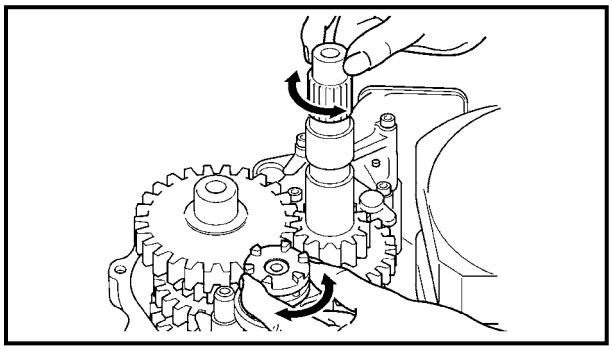

3. Check:
   - transmission
     Rough movement → Repair.

NOTE:
Oil each gear, shaft, and bearing thoroughly.

CONTENTS
CARBURETOR

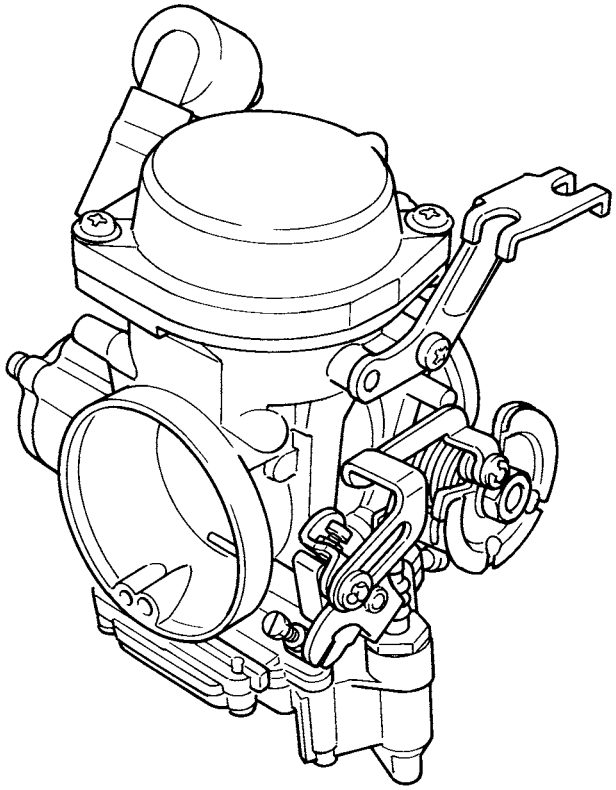

CARBURETOR 6-1
CHECKING THE CARBURETOR 6-6
CHECKING THE CARBURETOR JOINT 6-8
ASSEMBLING THE CARBURETOR 6-8
INSTALLING THE CARBURETOR JOINT 6-12
INSTALLING THE CARBURETOR 6-12
MEASURING AND ADJUSTING THE FUEL LEVEL 6-14
CHECKING AND ADJUSTING THE THROTTLE POSITION SENSOR 6-15
CHECKING THE FUEL PUMP 6-19
CHECKING THE FUEL COCK 6-19
CHECKING THE FUEL COCK OPERATION 6-20

AIR INDUCTION SYSTEM 6-21
AIR INJECTION 6-21
AIR CUTOFF VALVE 6-21

CHECKING THE AIR INDUCTION SYSTEM 6-26
INSTALLING THE AIR INDUCTION SYSTEM 6-26

EAS00480

CARBURETOR

CARBURETOR

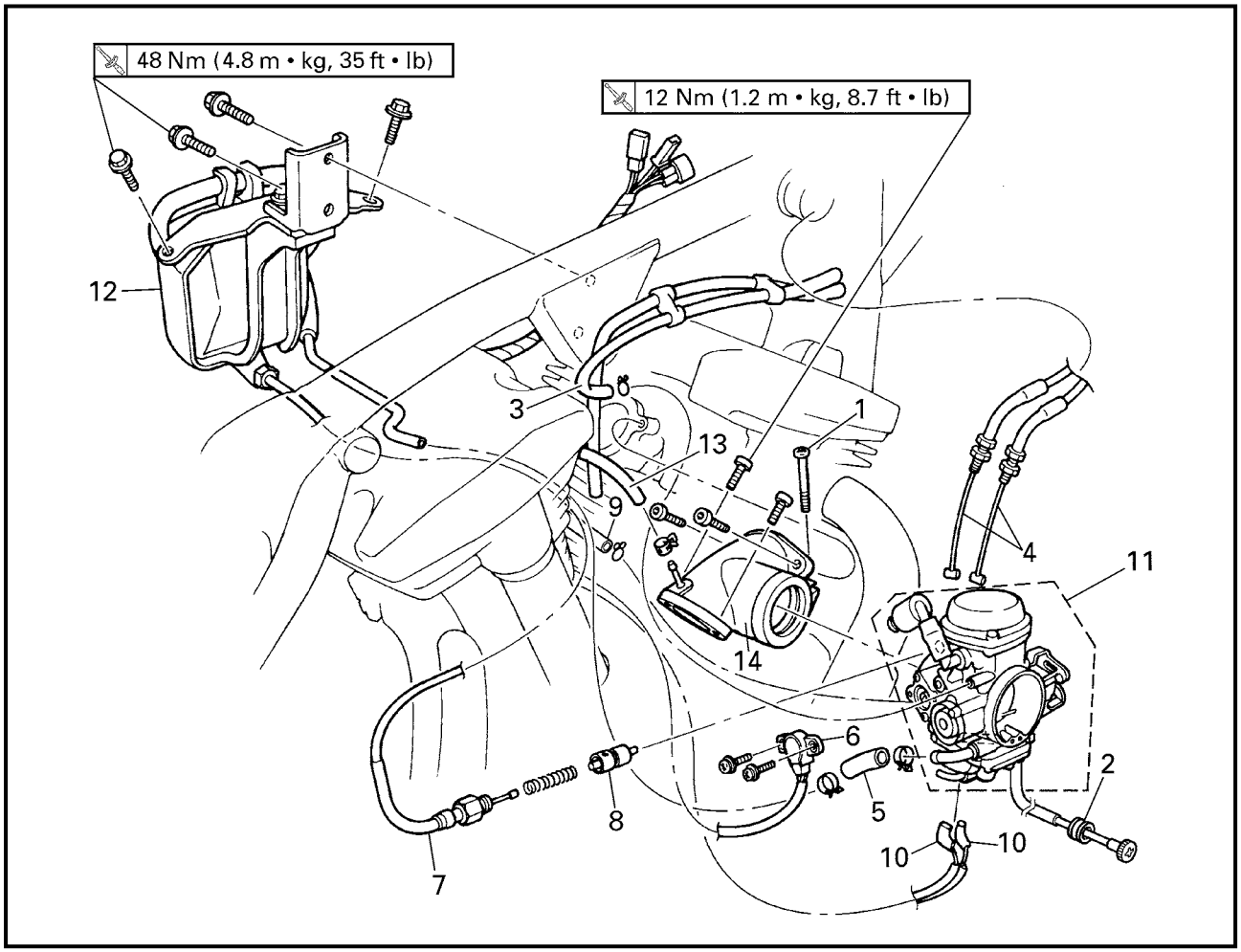

Order	Job/Part	Q'ty	Remarks
	Removing the carburetor		Remove the parts in the order listed.
	Rider seat		Refer to "SEATS AND SIDE COVERS" in chapter 3.
	Fuel tank		Refer to "FUEL TANK" in chapter 3.
	Air filter case		Refer to "AIR FILTER CASE" in chapter 3.
	Fuel (from the carburetor)		Drain.
1	Carburetor joint clamp screw	1	Loosen.
2	Throttle stop screw	1	Unhook.
3	Vacuum chamber breather hose (carburetor to solenoid valve hose)	1	Disconnect.
4	Throttle cable	2	Disconnect.
5	Fuel hose	1	
6	Throttle position sensor	1	
7	Starter cable	1	Disconnect.
8	Starter plunger	1	

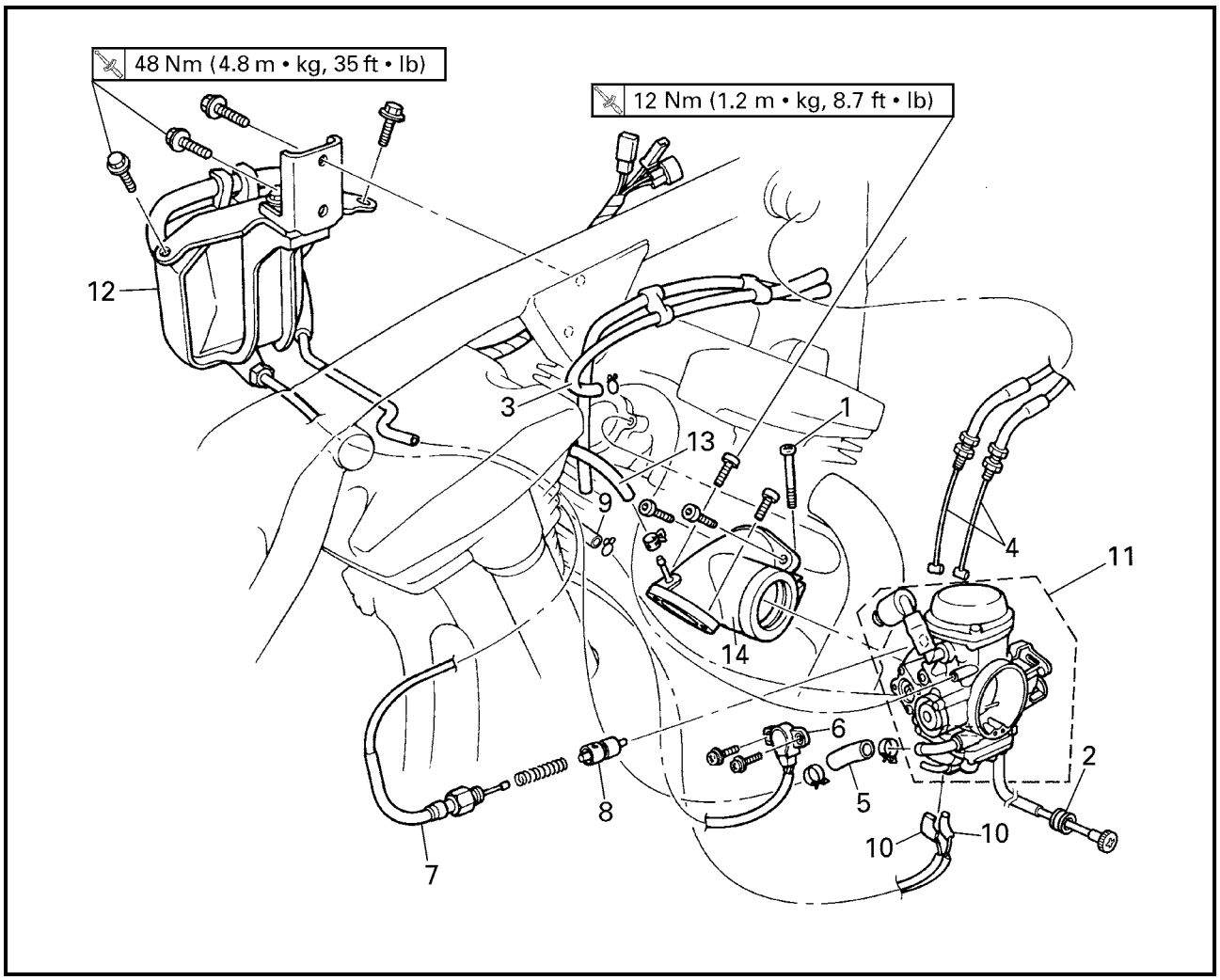

Order	Job/Part	Q'ty	Remarks
9	Charcoal canister hose (carburetor to charcoal canister)	1	Disconnect.
10	Carburetor heater connector	2	Disconnect.
11	Carburetor	1	
12	Fuel pump bracket assembly (with fuel pump)	1	
13	Vacuum hose	1	Disconnect.
14	Carburetor joint	1	
			For installation, reverse the removal procedure.

EAS00483

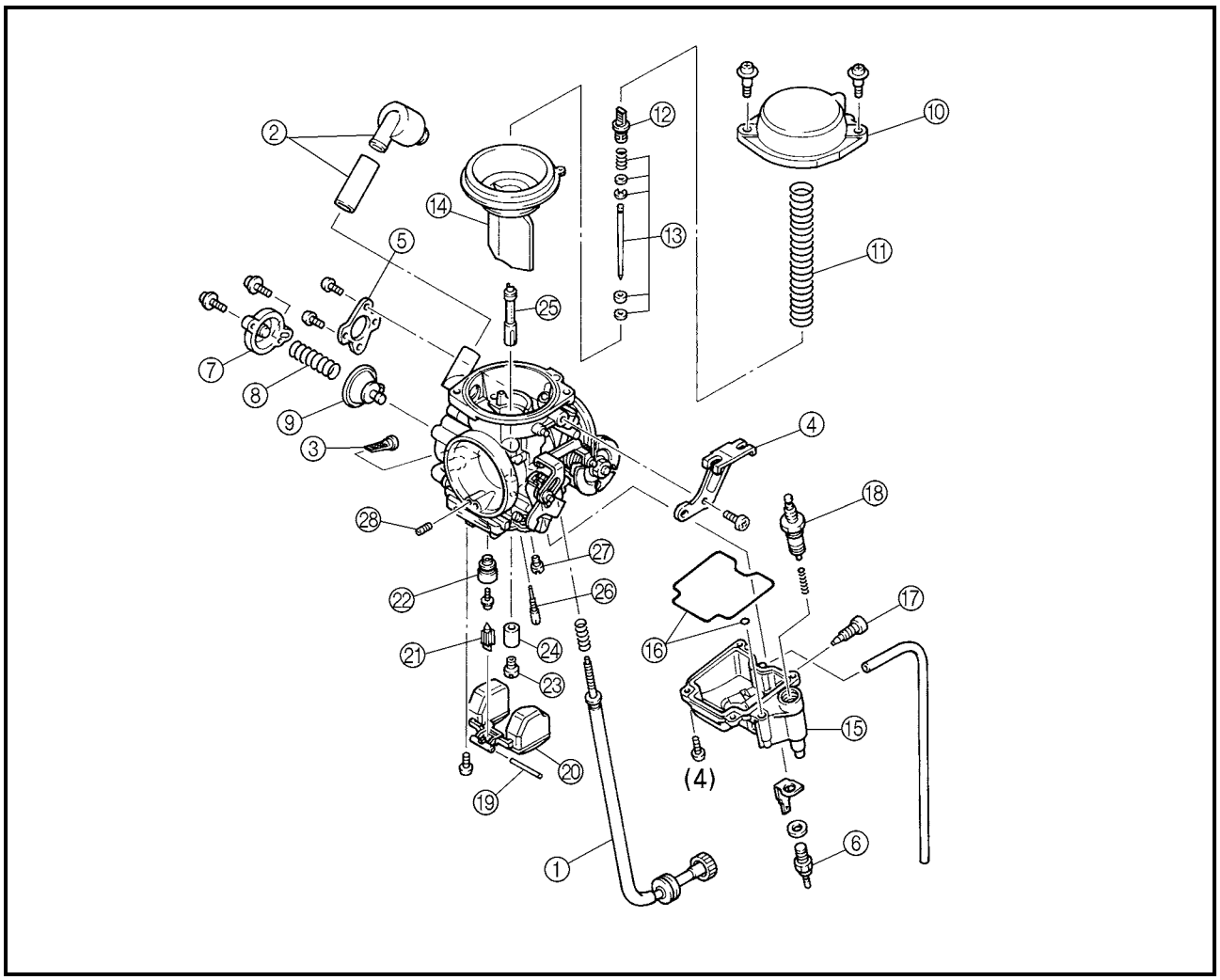

Order	Job/Part	Q'ty	Remarks
	Disassembling the carburetor		Remove the parts in the order listed.
①	Throttle stop screw	1	
②	Vacuum chamber air vent hose	1	
③	Fuel strainer	1	
④	Throttle cable holder	1	
⑤	Throttle position sensor bracket	1	
⑥	Carburetor heater	1	
⑦	Coasting enricher cover	1	
⑧	Coasting enricher spring	1	
⑨	Coasting enricher	1	

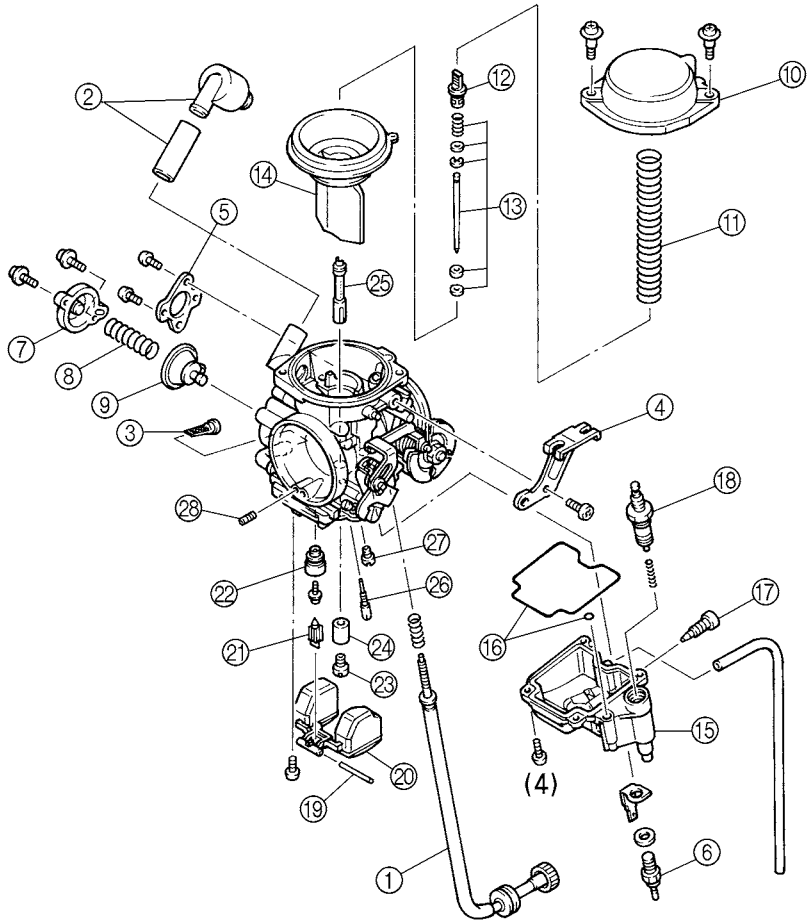

Order	Job/Part	Q'ty	Remarks
⑩	Vacuum chamber cover	1	
⑪	Piston valve spring	1	
⑫	Jet needle holder	1	
⑬	Jet needle kit	1	
⑭	Piston valve	1	
⑮	Float chamber	1	
⑯	Float chamber rubber gasket	1	
⑰	Drain bolt	1	
⑱	Accelerator plunger	1	
⑲	Float pivot pin	1	

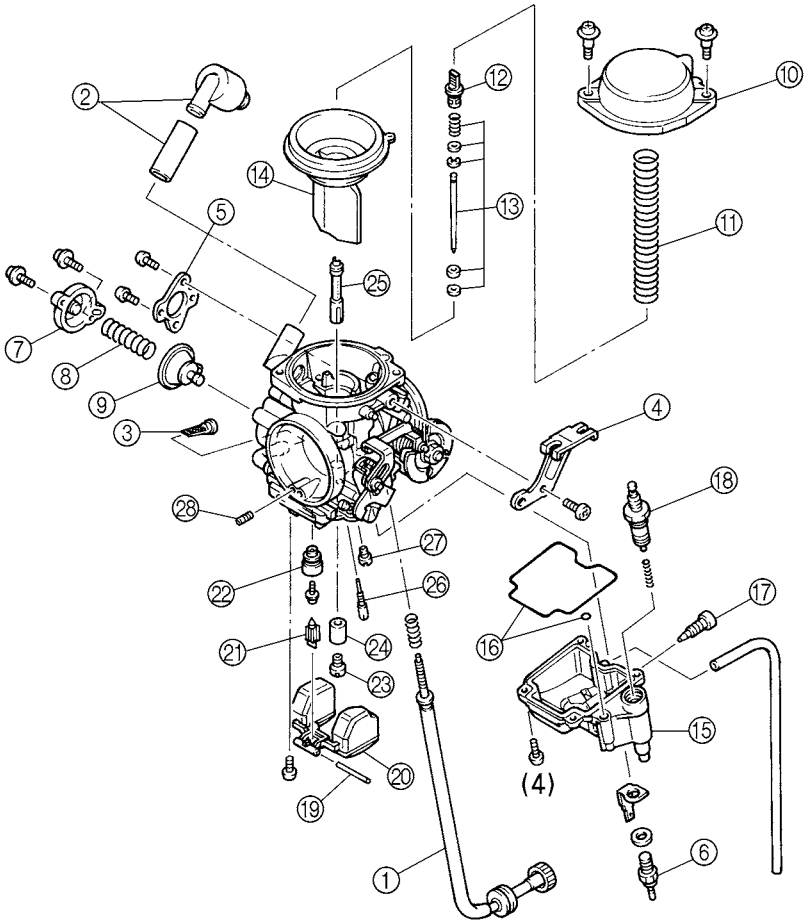

Order	Job/Part	Q'ty	Remarks
⑳	Float	1	
㉑	Needle valve	1	
㉒	Needle valve seat	1	
㉓	Main jet	1	
㉔	Spacer	1	
㉕	Needle jet	1	
㉖	Pilot jet	1	
㉗	Starter jet	1	
㉘	Pilot air jet	1	
			For assembly, reverse the disassembly procedure.

EAS00485
CHECKING THE CARBURETOR

1. Check:
   - carburetor body
   - float chamber
   - jet housing
     Cracks/damage → Replace.

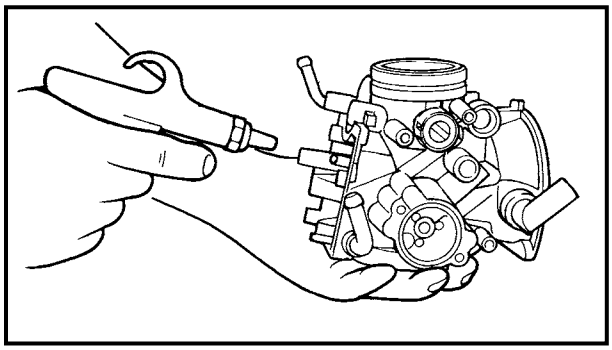

2. Check:
   - fuel passages
     Obstruction → Clean.

▼▼▼▼▼▼▼▼▼▼▼▼▼▼▼▼▼▼▼▼▼▼▼▼▼▼▼▼▼▼

a. Wash the carburetor in a petroleum-based solvent. Do not use any caustic carburetor cleaning solution.

b. Blow out all of the passages and jets with compressed air.

▲▲▲▲▲▲▲▲▲▲▲▲▲▲▲▲▲▲▲▲▲▲▲▲▲▲▲▲▲▲

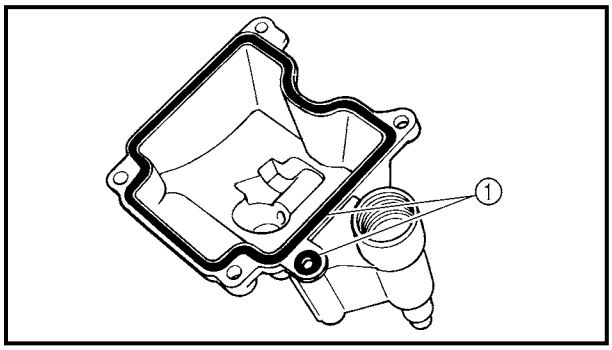

3. Check:
   - float chamber body
     Dirt → Clean.
4. Check:
   - float chamber rubber gasket ①
     Cracks/damage/wear → Replace.

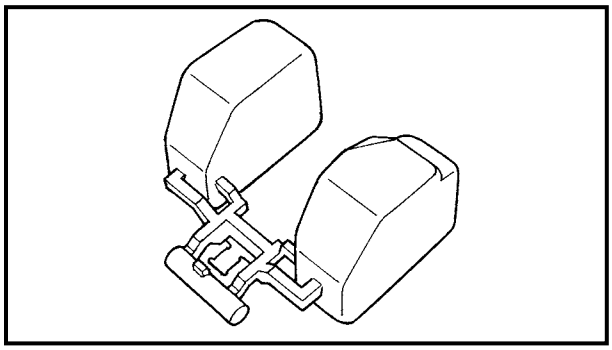

5. Check:
   - float
     Damage → Replace.

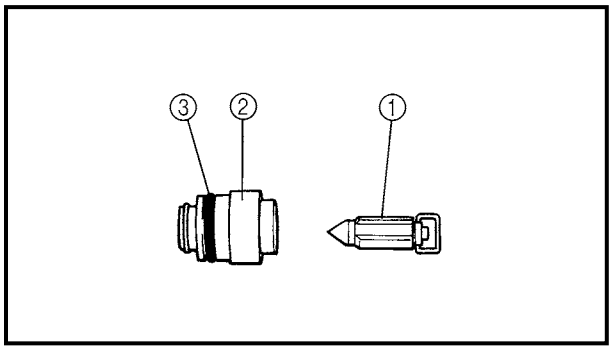

6. Check:
   - needle valve ①
   - needle valve seat ②
     Damage/obstruction/wear → Replace the needle valve, needle valve seat and O-ring as a set.
7. Check:
   - O-ring ③
     Damage/wear → Replace the needle valve, needle valve seat and O-ring as a set.

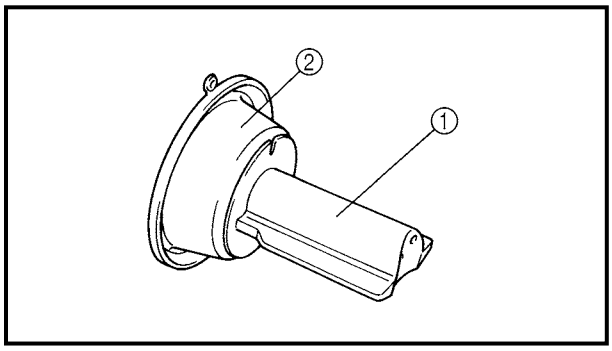

8. Check:
   - piston valve ①
     Damage/scratches/wear → Replace.
   - piston valve diaphragm ②
     Cracks/tears → Replace.

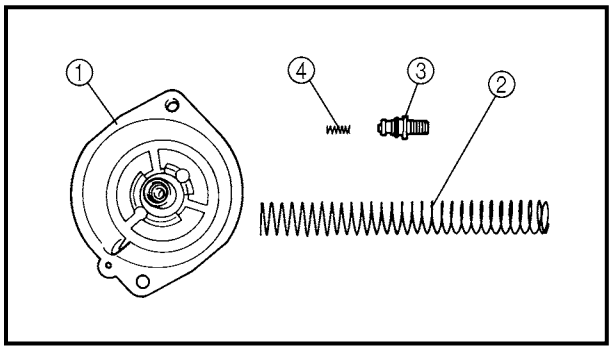

9. Check:
   - vacuum chamber cover ①
   - piston valve spring ②
   - jet needle holder ③
   - jet needle spring ④
     Cracks/damage → Replace.

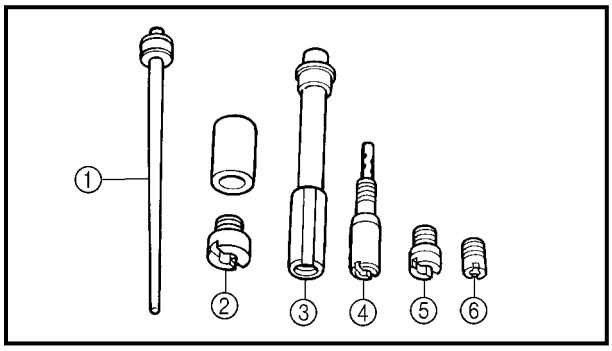

10. Check:
   - jet needle kit ①
   - main jet ②
   - needle jet ③
   - pilot jet ④
   - starter jet ⑤
   - pilot air jet ⑥
     Bends/damage/wear → Replace.
     Obstruction → Clean.
     Blow out the jets with compressed air.

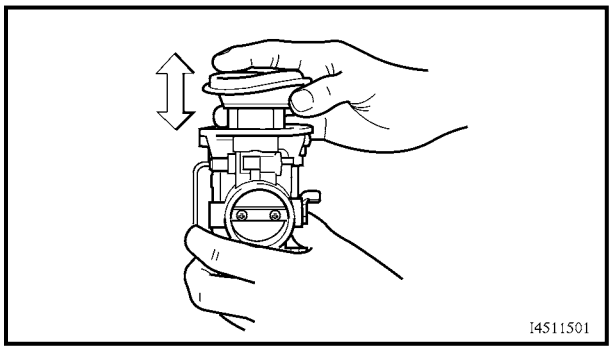

11. Check:
   - piston valve movement
     Insert the piston valve into the carburetor body and move it up and down.
     Tightness → Replace the piston valve.

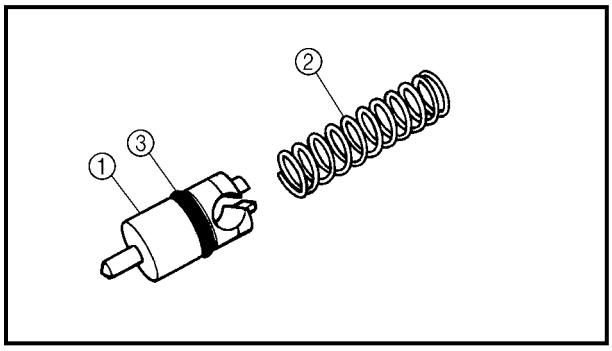

12. Check:
   - starter plunger ①
   - starter plunger spring ②
     Bends/cracks/damage → Replace.
   - O-ring ③
     Damage/wear → Replace.

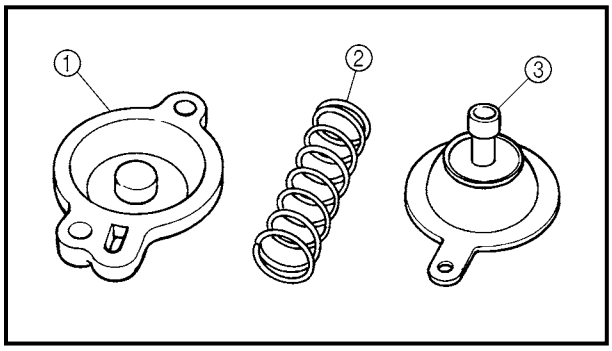

13.Check:
- coasting enricher cover ①
- coasting enricher spring ②
  Cracks/damage → Replace.
- coasting enricher ③
  Cracks/tears/damage → Replace.

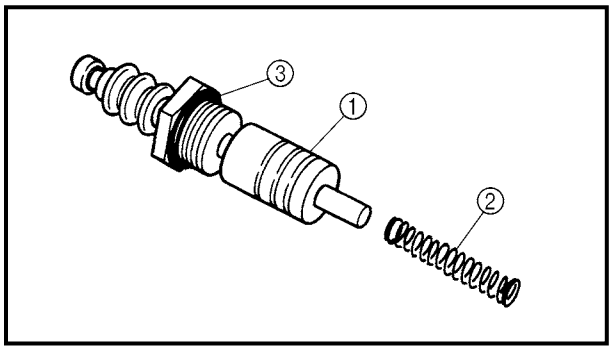

14.Check:
- accelerator plunger ①
- accelerator plunger spring ②
  Bends/cracks/damage → Replace.
- O-ring ③
  Damage/wear → Replace.

15.Check:
- fuel hose
  Cracks/damage/wear → Replace.
  Obstruction → Clean.
  Blow out the hoses with compressed air.

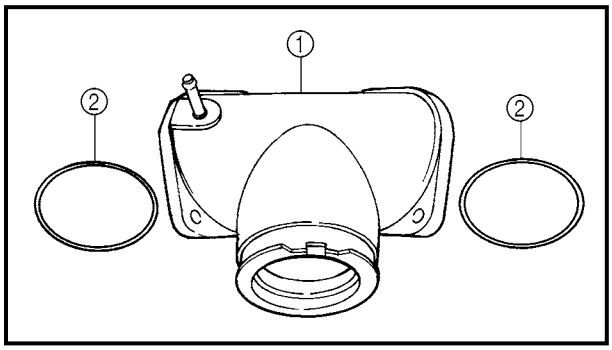

CHECKING THE CARBURETOR JOINT

1. Check:
   - carburetor joint ①
     Cracks/damage → Replace.
   - O-rings ②
     Damage/wear → Replace the O-ring.

EAS00487

ASSEMBLING THE CARBURETOR

CAUTION:

- **Before assembling the carburetor, wash all the parts in a petroleum-based solvent.**
- **Always use a new gasket.**

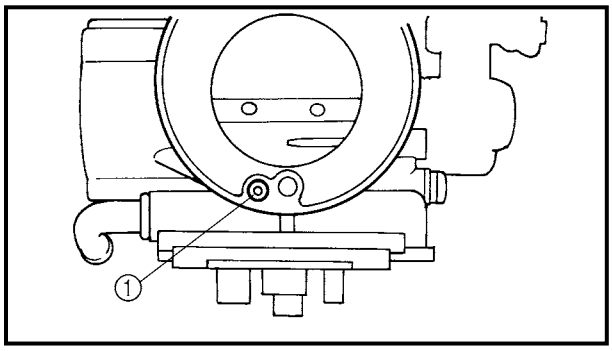

1. Install:
   - pilot air jet ①

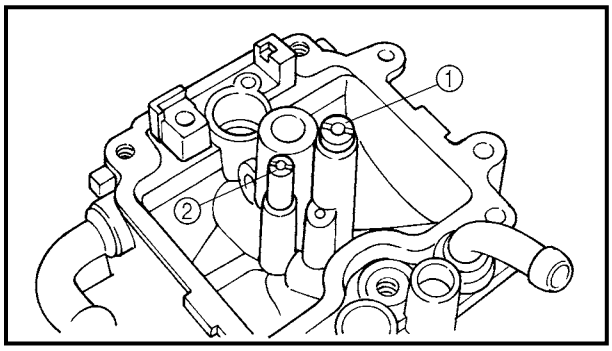

2. Install:
   - starter jet ①
   - pilot jet ②

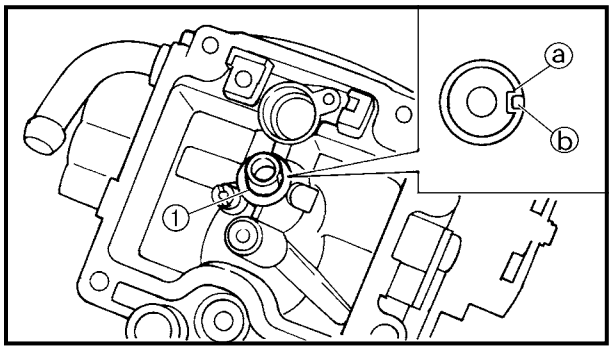

3. Install:
   - needle jet ①

NOTE:
Align the slot ⓐ on the needle jet with the projection ⓑ on the carburetor body.

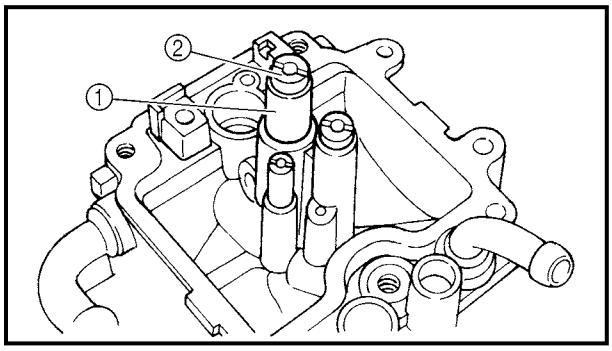

4. Install:
   - spacer ①
   - main jet ②

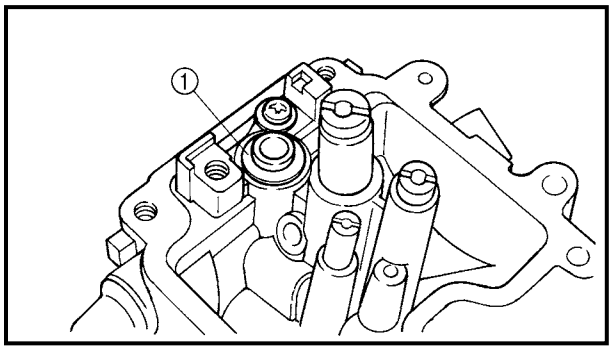

5. Install:
   - needle valve seat ①

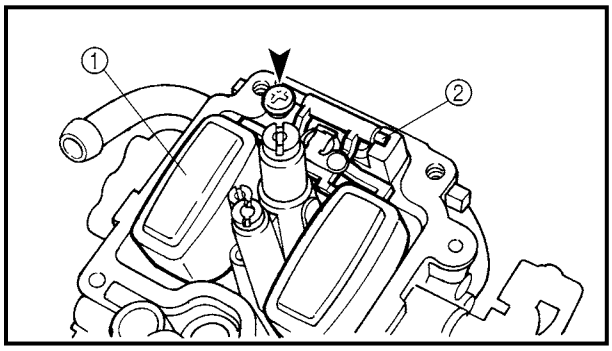

6. Install:
   - needle valve
   - float ①
   - float pin ②

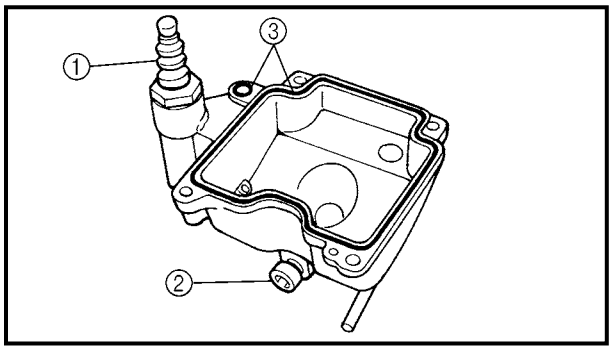

7. Install:
   - accelerator plunger ①
   - drain bolt ②
   - float chamber rubber gasket ③

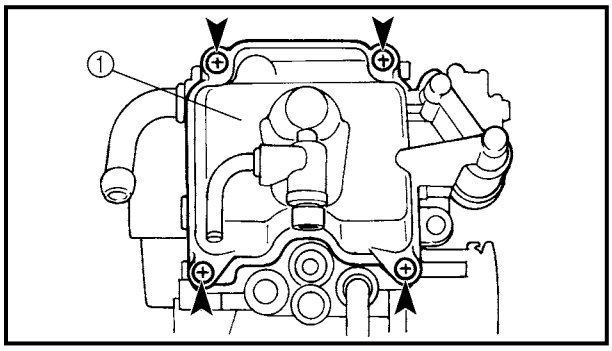

8. Install:
   - float chamber ①

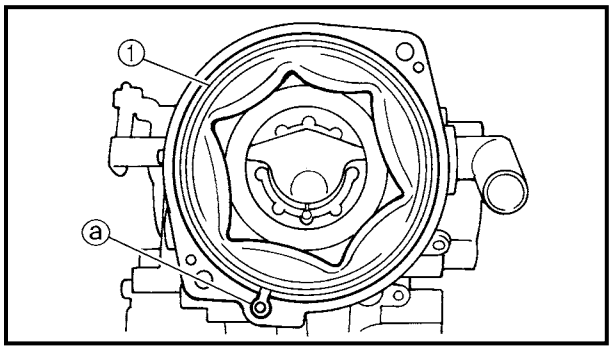

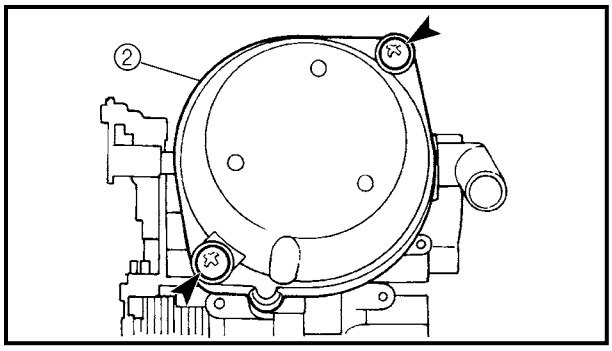

9. Install:
   - piston valve ①
   - jet needle kit
   - jet needle holder
   - piston valve spring
   - vacuum chamber cover ②

NOTE:
- Install the end of the piston valve spring onto the spring guide on the vacuum chamber cover.
- Align the tab ⓐ on the piston valve diaphragm with the recess in the carburetor body.

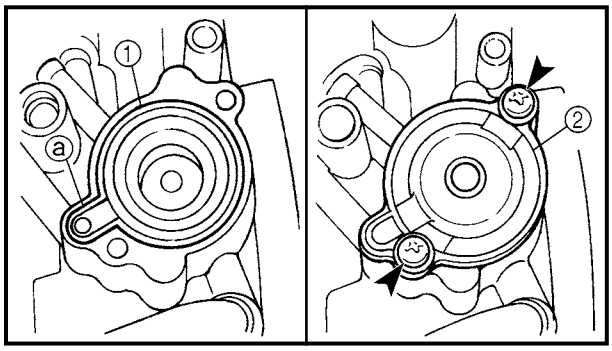

10.Install:
- coasting enricher ①
- coasting enricher spring
- coasting enricher cover ②

NOTE:
Align the tab ⓐ on the coasting enricher with the recess ⓑ in the carburetor body.

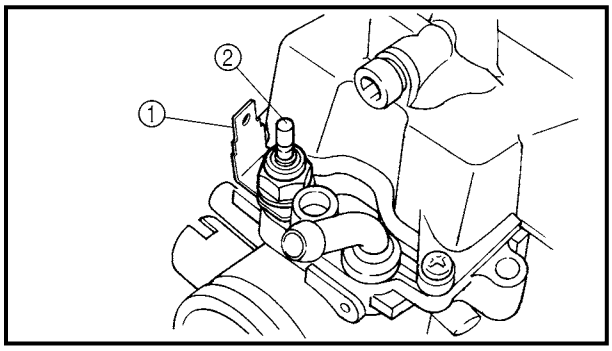

11.Install:
- terminal ①
- washer
- carburetor heater ②

2.5 Nm (0.25 m · kg, 2.0 ft · lb)

NOTE:
Use "Heat Sinker" when installing the carburetor heater.

Heat Sinker

6

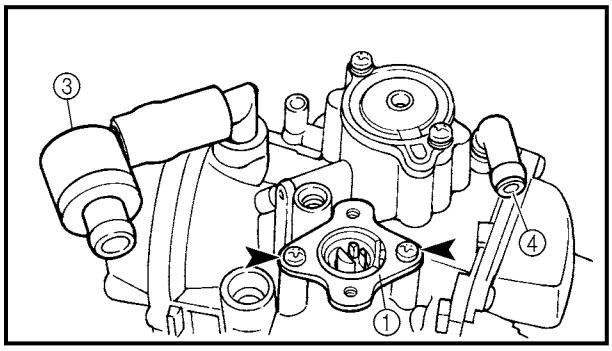

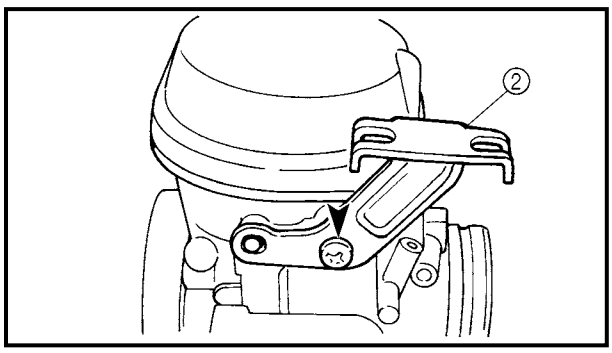

12.Install:
- throttle position sensor bracket ①
- throttle cable holder ②
- fuel strainer ③
- vacuum chamber air vent hose ④

13.Install:
- throttle stop screw
- drain hose

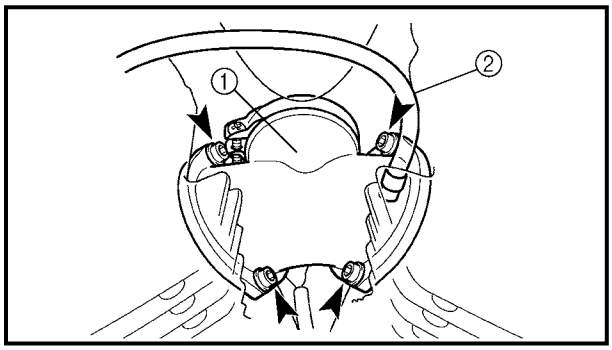

INSTALLING THE CARBURETOR JOINT

1. Install:
   - carburetor joint ①

	12 Nm (1.2 m · kg, 8.7 ft · lb)

2. Connect:
   - vacuum hose ②

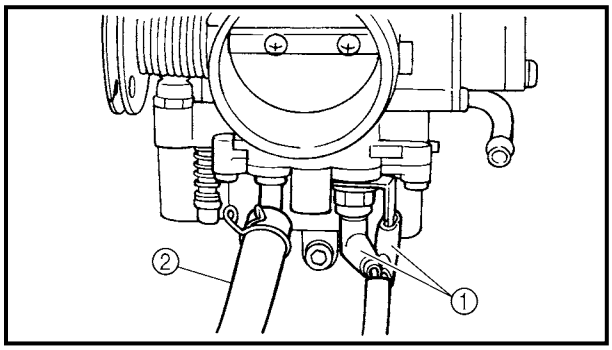

EAS00492
INSTALLING THE CARBURETOR

1. Connect:
   - carburetor heater connectors ①
   - charcoal canister hose (carburetor to charcoal canister) ②

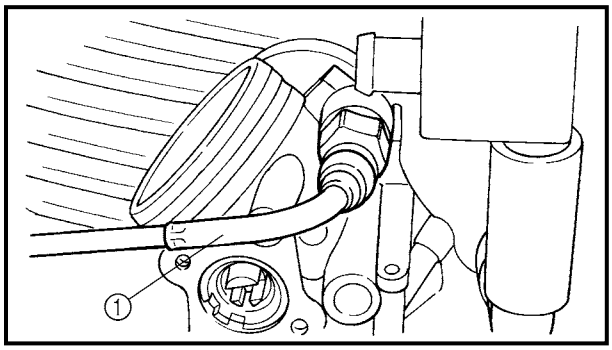

2. Install:
   - starter plunger
3. Connect:
   - starter cable ①

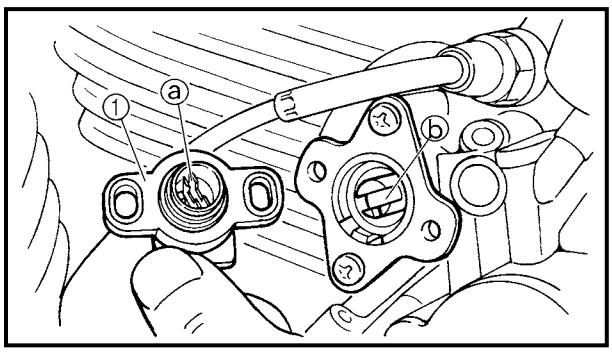

4. Install:
   - throttle position sensor

NOTE:
- Align the slot ⓐ of the throttle position sensor with the projection ⓑ of the throttle lever shaft.
- For the correct installation, refer to "CHECKING AND ADJUSTING THE THROTTLE POSITION SENSOR".

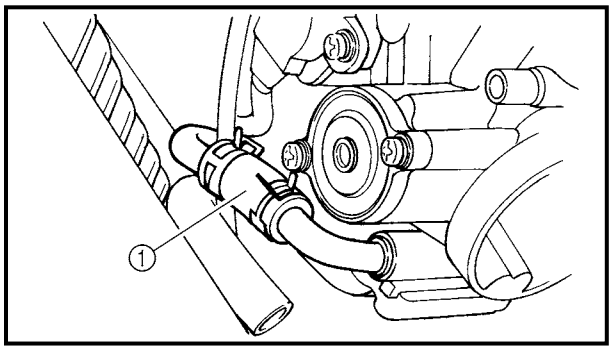

5. Connect:
   - fuel hose ①

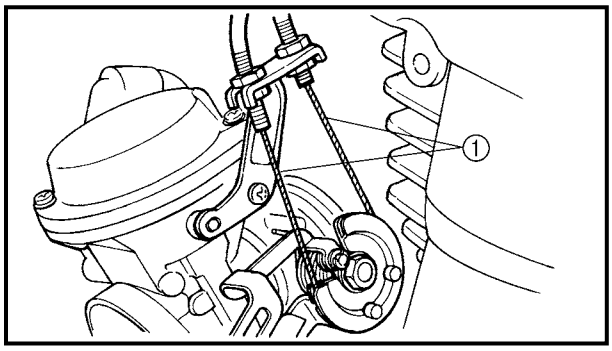

6. Connect:
   - throttle cables ①

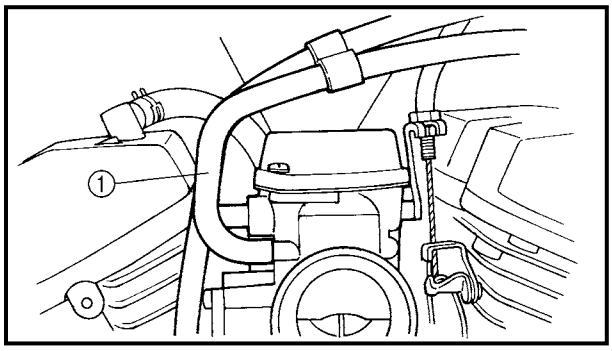

7. Connect:
   - float chamber breather hose (carburetor to solenoid valve) ①

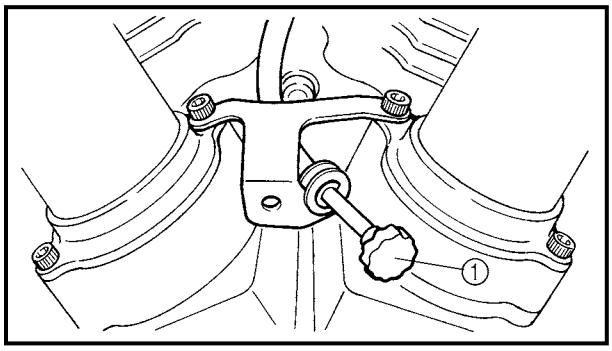

8. Hook:
   - throttle stop screw ①

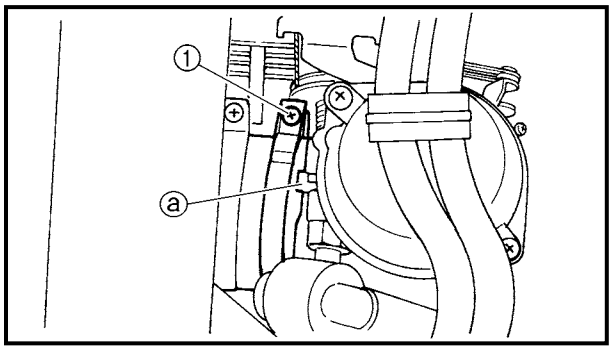

9. Install:
   - carburetor

NOTE:

Align the projection ⓐ of the carburetor with slot of the carburetor joint.

10. Tighten:
   - carburetor joint clamp screw ①

11.Adjust:
- engine idling speed

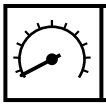	**Engine idling speed** **850 ~ 950 r/min**

Refer to "ADJUSTING THE ENGINE IDLING SPEED" in chapter 3.

12.Adjust:
- throttle cable free play

	Throttle cable free play (at the flange of the throttle grip) **4 ~ 8 mm (0.16 ~ 0.31 in)**

Refer to "ADJUSTING THE THROTTLE CABLE FREE PLAY" in chapter 3.

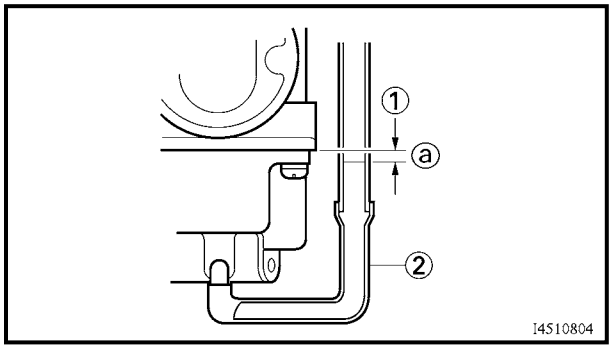

EAS00498
MEASURING AND ADJUSTING THE FUEL LEVEL

1. Measure:
- fuel level ⓐ
  Out of specification → Adjust.

	Fuel level (below the float chamber mating surface) **2.0 ~ 3.0 mm (0.079 ~ 0.12 in)**

▼▼▼▼▼▼▼▼▼▼▼▼▼▼▼▼▼▼▼▼▼▼▼▼▼▼▼▼▼▼▼▼

a. Stand the motorcycle on a level surface.

b. Place the motorcycle on a suitable stand to ensure that the motorcycle is standing straight up.

c. Install the fuel level gauge ① onto the fuel drain pipe ②.

	Fuel level gauge **YM-01312-A**

d. Loosen the fuel drain bolt ③.

e. Measure the fuel level ⓐ.

▲▲▲▲▲▲▲▲▲▲▲▲▲▲▲▲▲▲▲▲▲▲▲▲▲▲▲▲▲▲▲▲

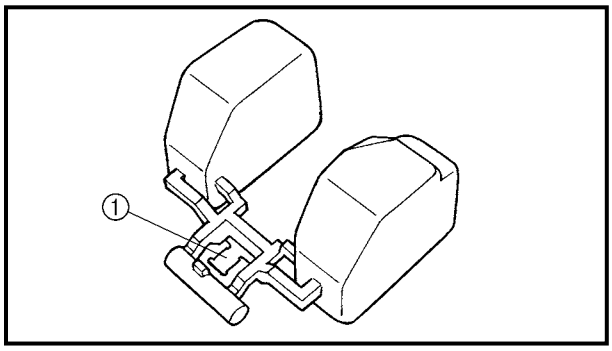

2. Adjust:
   - fuel level

▼▼▼▼▼▼▼▼▼▼▼▼▼▼▼▼▼▼▼▼▼▼▼▼▼▼▼▼▼▼

a. Remove the carburetor.
b. Check the needle valve seat and needle valve.
c. If either is worn, replace them as a set.
d. If both are fine, adjust the float level by slightly bending the float tang ①.
e. Install the carburetor.
f. Measure the fuel level again.
g. Repeat steps (a) to (f) until the fuel level is within specification.

▲▲▲▲▲▲▲▲▲▲▲▲▲▲▲▲▲▲▲▲▲▲▲▲▲▲▲▲▲▲

EAS00502

CHECKING AND ADJUSTING THE THROTTLE POSITION SENSOR

NOTE:

Before adjusting the throttle position sensor, the engine idling speed should be properly adjusted.

1. Check:
   - throttle position sensor (installed on the carburetor)

▼▼▼▼▼▼▼▼▼▼▼▼▼▼▼▼▼▼▼▼▼▼▼▼▼▼▼▼▼▼

a. Disconnect the throttle position sensor coupler from the wire harness.
b. Connect the pocket tester (Ω × 1k) to the throttle position sensor coupler.

Positive tester probe → blue terminal ①
Negative tester probe → black terminal ②

c. Measure the maximum throttle position sensor resistance.
   Out of specification → Replace the throttle position sensor.

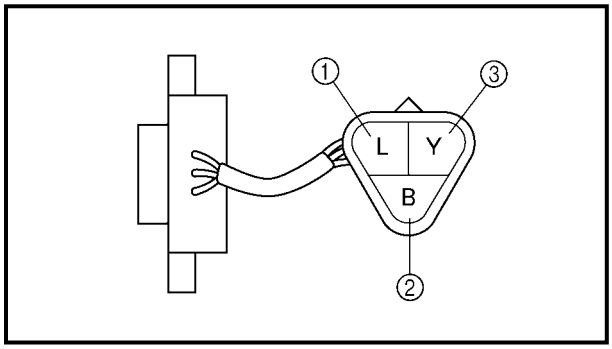

Maximum throttle position sensor resistance
4.0 ~ 6.0 kΩ at 20 °C (68 °F)
(blue — black)

d. Connect the pocket tester (Ω × 1k) to the throttle position sensor.

Positive tester probe → yellow terminal ③
Negative tester probe → black terminal ②

e. While slowly opening the throttle, check that the throttle position sensor resistance is within the specified range.

NOTE:

Check mainly that the resistance changes gradually when turning the throttle, since the readings (from closed to wide-open throttle) may differ slightly from those specified.

Out of specification or the resistance changes abruptly → Go to step 2 below.

Throttle position sensor resistance
(520 ~ 900 Ω) ~ (4.0 ~ 6.0 kΩ) at 20 °C (68 °F)
(yellow — black/blue)

▲▲▲▲▲▲▲▲▲▲▲▲▲▲▲▲▲▲▲▲▲▲▲▲▲▲▲▲▲▲

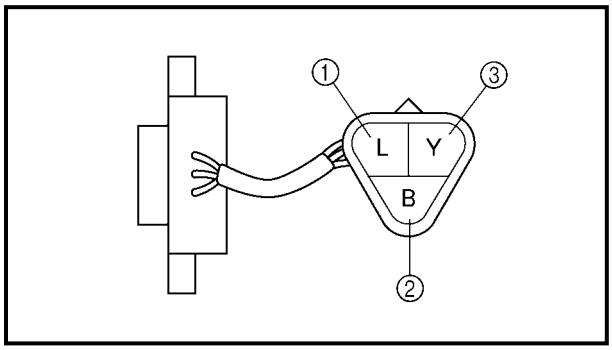

2. Check:
- throttle position sensor
  (removed from the carburetor)

▼▼▼▼▼▼▼▼▼▼▼▼▼▼▼▼▼▼▼▼▼▼▼▼▼▼▼▼▼▼

a. Disconnect the throttle position sensor coupler from the wire harness.

b. Remove the throttle position sensor from the carburetor.

c. Connect the pocket tester (Ω × 1k) to the throttle position sensor.

Positive tester probe → blue terminal ①
Negative tester probe → black terminal ②

d. Measure the maximum throttle position sensor resistance.

Out of specification → Replace the throttle position sensor.

Maximum throttle position sensor resistance
4.0 ~ 6.0 kΩ at 20 ˚C (68 ˚F)
(blue — black/blue)

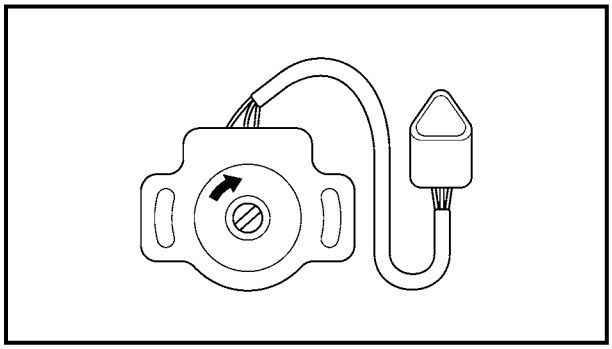

e. Connect the pocket tester (Ω × 1k) to the throttle position sensor coupler.

Positive tester probe → yellow terminal ③
Negative tester probe → black terminal ②

f. While slowly opening the throttle, check that the throttle position sensor resistance is within the specified range.
The resistance does not change or it changes abruptly → Replace the throttle position sensor.
The slot is worn or broken → Replace the throttle position sensor.

NOTE:
Check mainly that the resistance changes gradually when turning the throttle, since the readings (from closed to wide-open throttle) may differ slightly from those specified.

Throttle position sensor resistance
0 ~ 5 ± 1.0 kΩ at 20 ˚C (68 ˚F)
(yellow — black/blue)

▲▲▲▲▲▲▲▲▲▲▲▲▲▲▲▲▲▲▲▲▲▲▲▲▲▲▲▲▲▲

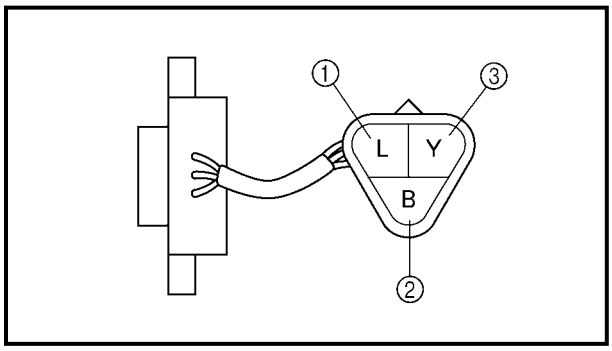

3. Adjust:
   - throttle position sensor angle

▼▼▼▼▼▼▼▼▼▼▼▼▼▼▼▼▼▼▼▼▼▼▼▼▼▼▼▼▼▼

a. Disconnect the throttle position sensor coupler from the wire harness.

b. Connect the pocket tester (Ω × 1k) to the throttle position sensor coupler.

Positive tester probe → blue terminal ①
Negative tester probe → black terminal ②

c. Measure the throttle position sensor maximum resistance.

d. Calculate the throttle position sensor maximum resistance when the throttle is fully closed.

Throttle position sensor maximum resistance (throttle is fully closed) = Maximum resistance × (0.13 ~ 0.15)

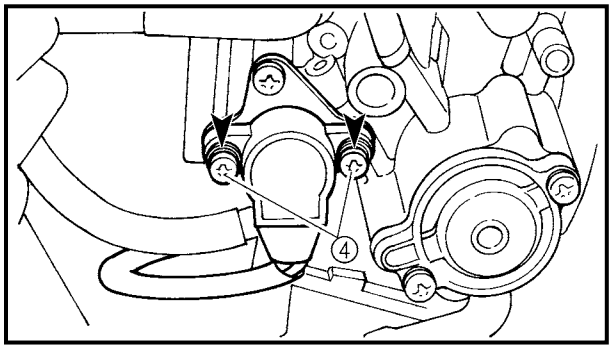

Example:
If the maximum resistance = 5 kΩ, then the throttle position sensor's maximum resistance when the throttle is fully closed should be:
5 kΩ × (0.13 ~ 0.15) = 650 ~ 750 Ω
Lift the carburetor assembly slightly out of the intake manifolds.
Loosen the throttle position sensor screws ④.
Connect the pocket tester (Ω × 100) to the throttle position sensor.

Positive tester probe → yellow terminal ③
Negative tester probe → black terminal ①

e. Adjust the throttle position sensor angle so that the measured resistance is within the specified range.

Throttle position sensor resistance
650 ~ 750 Ω
(yellow — black terminal)

After adjusting the throttle position sensor angle, tighten the throttle position sensor screws.

▲▲▲▲▲▲▲▲▲▲▲▲▲▲▲▲▲▲▲▲▲▲▲▲▲▲▲▲▲▲

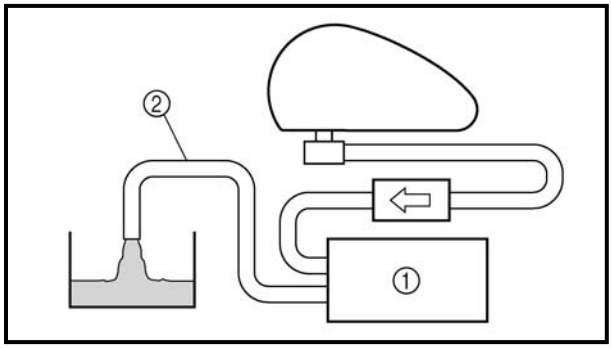

EAS00504
CHECKING THE FUEL PUMP

1. Check:
   - fuel pump ①

▼▼▼▼▼▼▼▼▼▼▼▼▼▼▼▼▼▼▼▼▼▼▼▼▼▼▼▼▼▼▼▼

a. Disconnect the fuel hose (fuel pump to carburetor) ② from the carburetor.

b. Place a container under the end of the fuel hose.

c. Set the fuel cock to "ON" or "RES".

d. Start the engine and check if fuel flows from the fuel hose ②.

Fuel flows.	**Fuel pump is OK.**
Fuel does not flow.	**Replace the fuel pump.**

e. Stop the engine and check if the fuel stops flowing from the fuel hose ②.

Fuel stops flowing.	**Fuel pump is OK.**
Fuel flows.	**Replace the fuel pump.**

▲▲▲▲▲▲▲▲▲▲▲▲▲▲▲▲▲▲▲▲▲▲▲▲▲▲▲▲▲▲▲▲

6

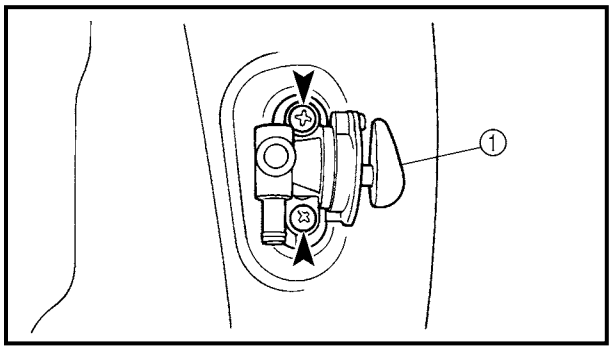

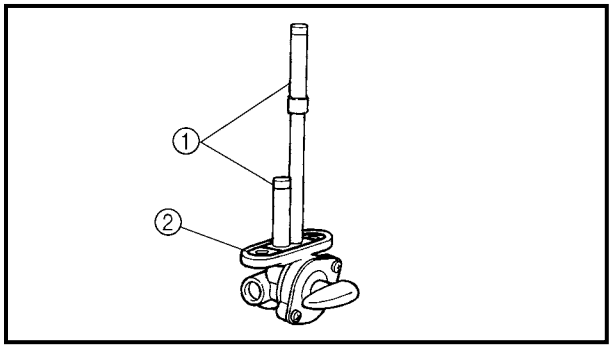

EAS00505
CHECKING THE FUEL COCK

1. Drain:
   - fuel
     (from the fuel tank)
2. Disconnect:
   - fuel hose
     (from the fuel cock)
3. Remove:
   - fuel cock ①
4. Check:
   - fuel cock
     Cracks/damage/wear → Replace.
5. Check:
   - fuel cock strainer ①
     (with compressed air)
     Dirt/obstruction → Clean.
     Damage → Replace the fuel cock as a set.
   - rubber gasket ②
     Cracks/damage/wear → Replace.

6. Install:
   • fuel cock
7. Connect:
   • fuel hose

EAS00506
CHECKING THE FUEL COCK OPERATION

NOTE:
After installing the fuel cock, check its operation.

1. Set the fuel cock to “OFF”.
2. Disconnect:
   • fuel hose
   (from the fuel cock)
3. Check:
   • fuel cock operation

▼▼▼▼▼▼▼▼▼▼▼▼▼▼▼▼▼▼▼▼▼▼▼▼▼▼▼▼▼▼▼

a. Place a container under the end of the fuel cock.
b. Check that the fuel cock lever is turned to “ON” or “RES”.

Fuel flows.	**Fuel cock is OK.**
Fuel does not flow.	**Replace the fuel cock.**

▲▲▲▲▲▲▲▲▲▲▲▲▲▲▲▲▲▲▲▲▲▲▲▲▲▲▲▲▲▲▲

4. Connect:
   • fuel hose

6

EAS00507
AIR INDUCTION SYSTEM

AIR INJECTION

The air induction system burns unburned exhaust gases by injecting fresh air (secondary air) into the exhaust port, reducing the emission of hydrocarbons.
When there is negative pressure at the exhaust port, the reed valve opens, allowing secondary air to flow into the exhaust port. The required temperature for burning the unburned exhaust gases is approximately 600 to 700 ˚C (1,112 to 1,292 ˚F).

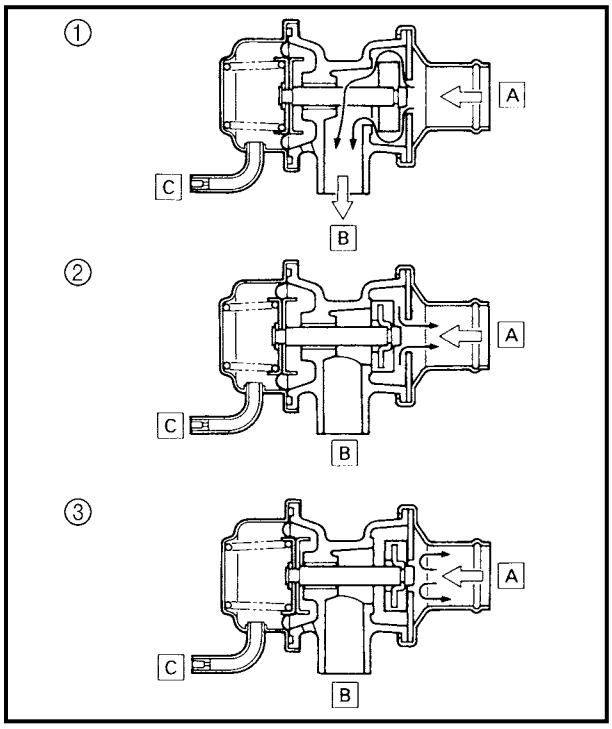

EAS00508
AIR CUTOFF VALVE

The air cutoff valve is operated by the intake gas pressure through the piston valve diaphragm. Normally, the air cutoff valve is open to allow fresh air to flow into the exhaust port. During sudden deceleration (the butterfly valve suddenly closes), negative pressure is generated and the air cutoff valve is closed in order to prevent after-burning.
Additionally, at high engine speeds and when the pressure decreases, the air cutoff valve automatically closes to guard against a loss of performance due to self-EGR (Exhaust Gas Recirculation).
① During normal operation, the air cutoff valve is open.
② During sudden deceleration (the butterfly valve suddenly closes), the air cutoff valve closes.
③ At high engine speeds and when the pressure decreases, the air cutoff valve is closed.
A From the air cleaner
B To the reed valve
C To the carburetor joint

EAS00509
AIR INDUCTION SYSTEM DIAGRAMS

① Reed valve
② Air cut valve
③ Air cleaner
④ Carburetor joint

A To the carburetor joint
B To the front cylinder head
C To the rear cylinder head
D To the air cut valve

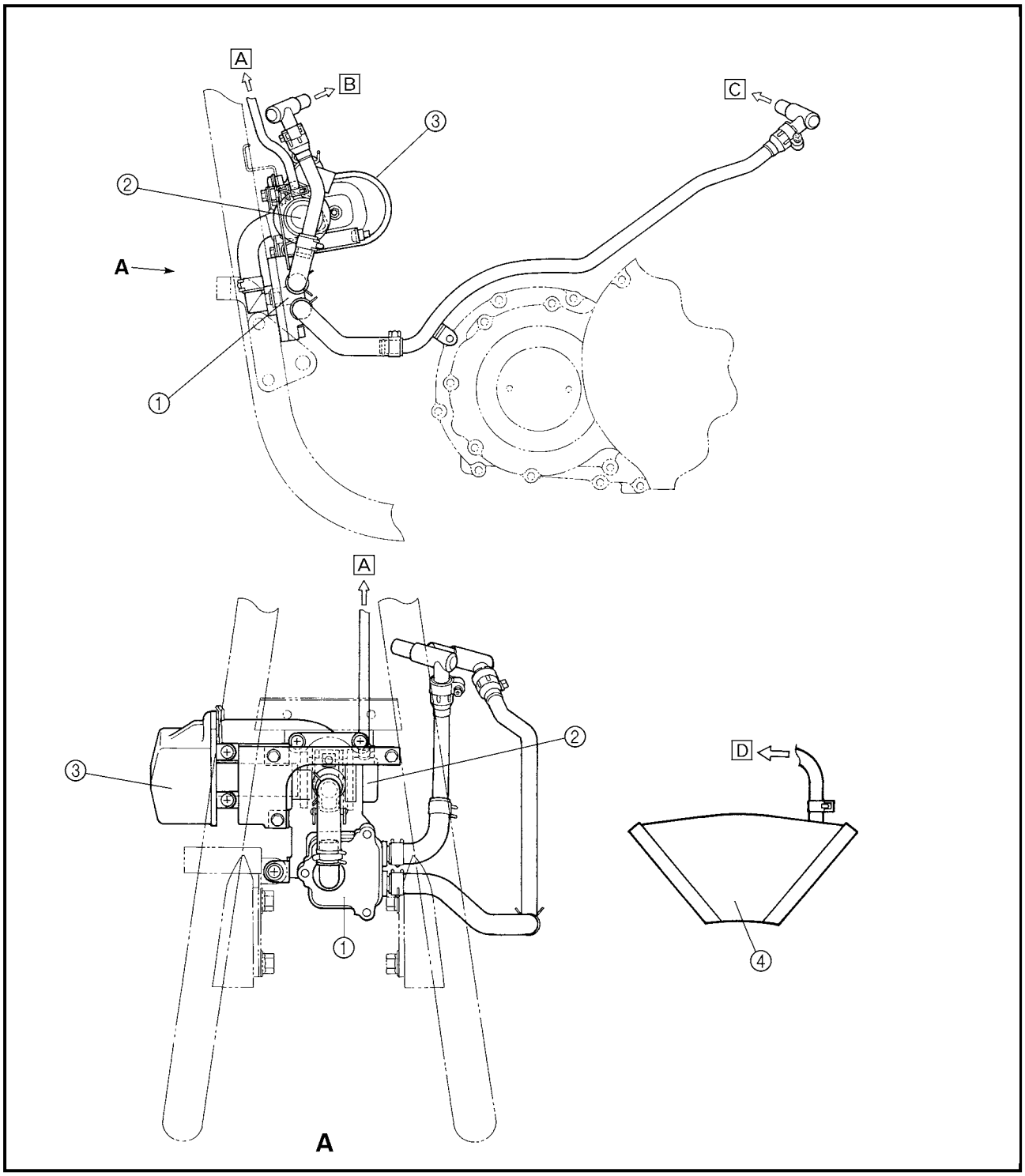

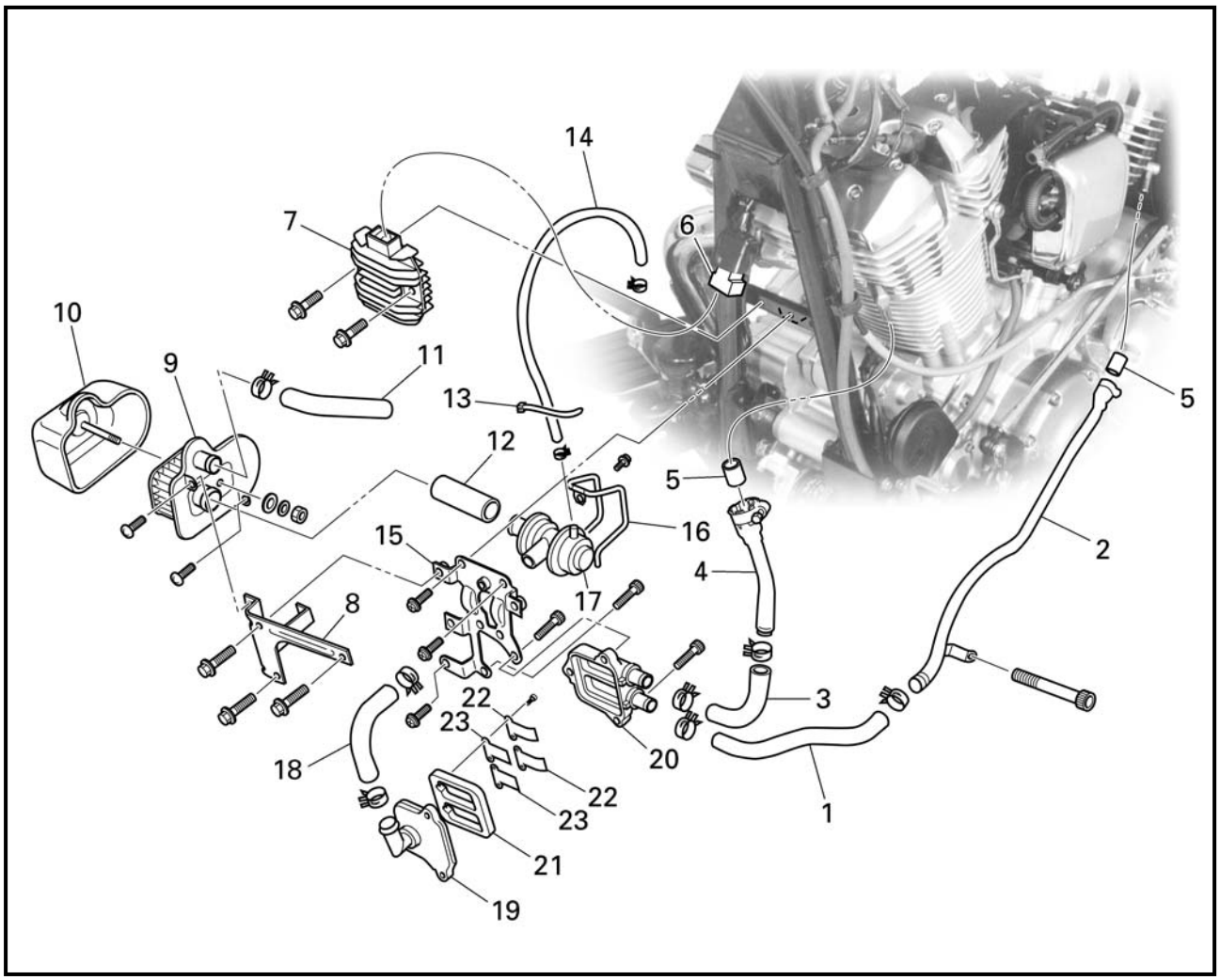

Order	Job/Part	Q'ty	Remarks
	Removing the air induction system		Remove the parts in the order listed.
	fuel tank		Refer to "FUEL TANK" in chapter 3.
1	Reed valve case to rear cylinder head hose	1	
2	Reed valve case to rear cylinder head pipe	1	
3	Reed valve case to front cylinder head hose	1	
4	Reed valve case to front cylinder head hose	1	
5	Gasket	2	
6	Rectifier/regulator coupler	1	Disconnect.
7	Rectifier/regulator	1	
8	Air filter bracket	1	

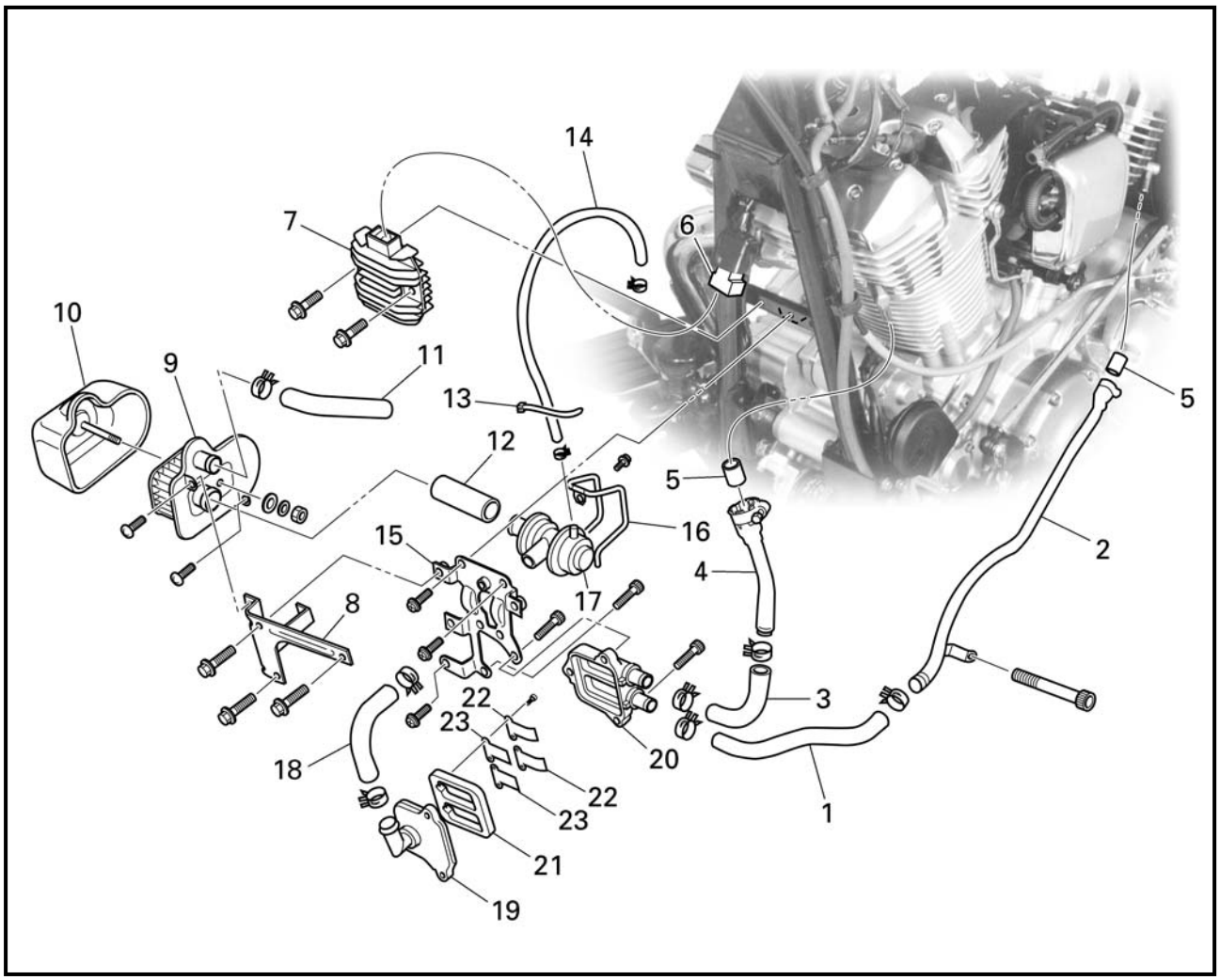

Order	Job/Part	Q'ty	Remarks
9	Air filter	1	
10	Air filter cover	1	
11	Air filter hose	1	
12	Air cut valve to air filter hose	1	
13	Plastic locking tie	1	
14	Vacuum hose	1	
15	Bracket	1	
16	Air cut valve holder	1	
17	Air cut valve	1	
18	Air cut valve to reed valve cover hose	1	
19	Reed valve cover	1	
20	Reed valve case	1	

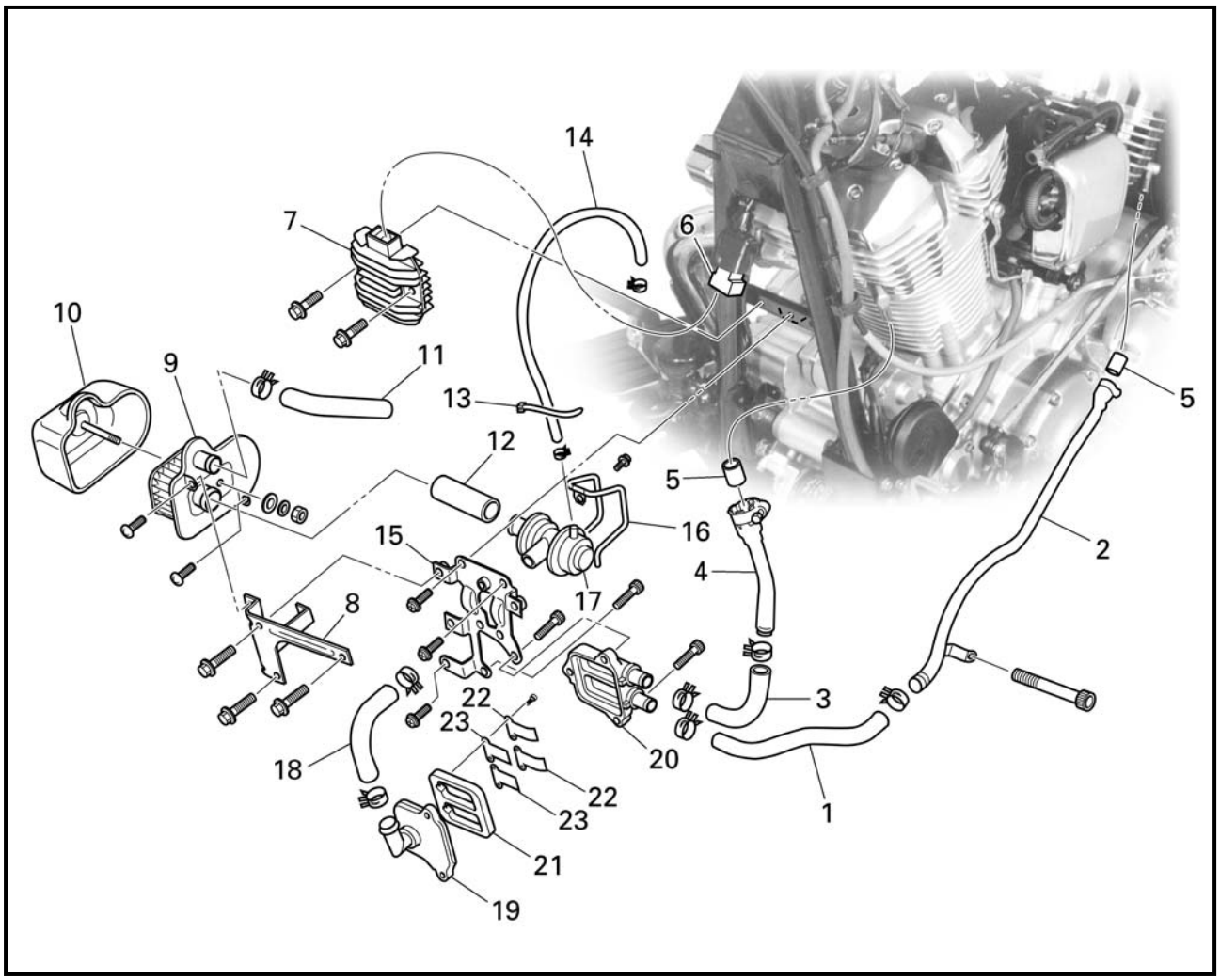

Order	Job/Part	Q'ty	Remarks
21	Reed valve base	1	
22	Reed valve stopper	2	
23	Reed valve	2	
			For installation, reverse the removal procedure.

EAS00510
CHECKING THE AIR INDUCTION SYSTEM

1. Check:
   - hoses
     Loose connection → Connect properly.
     Cracks/damage → Replace.
   - pipes
     Cracks/damage → Replace.

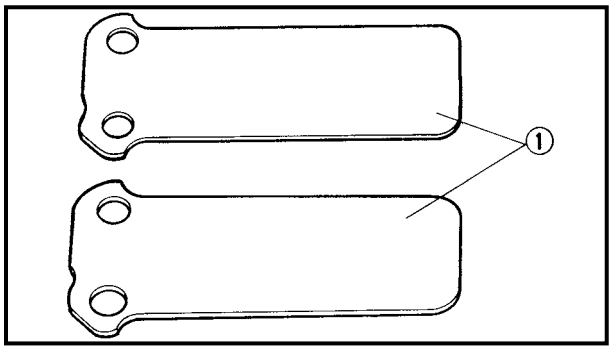

2. Check:
   - fibre reed ①
   - fibre reed stopper
   - reed valve seat
     Cracks/damage → Replace the reed valve.

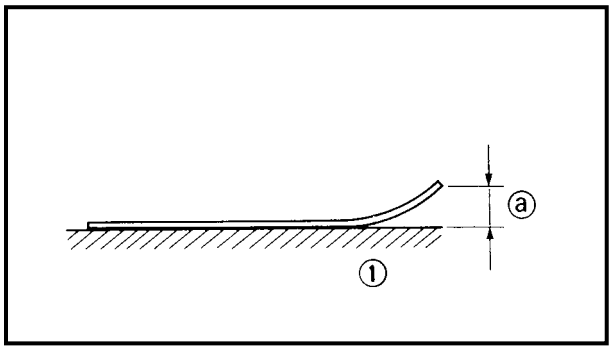

3. Measure:
   - fibre reed bending ⓐ
     Out of specification → Replace the reed valve.

	Maximum fibre reed bending 0.4 mm (0.016 in)

① Surface plate

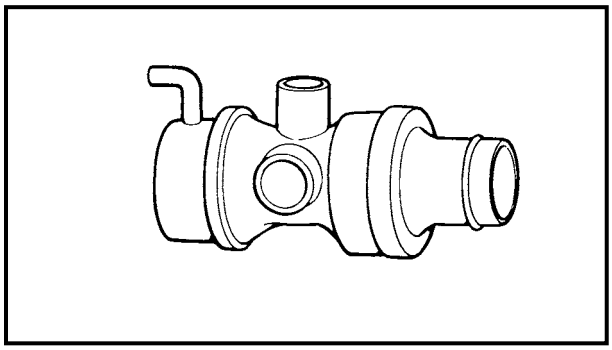

4. Check:
   - air cutoff valve
     Cracks/damage → Replace.

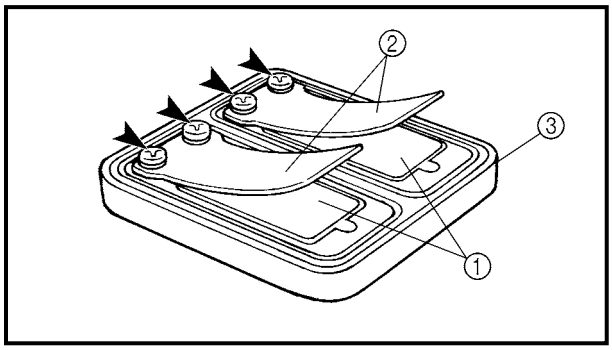

INSTALLING THE AIR INDUCTION SYSTEM

1. Install:
   - reed valves ①
   - reed valve stoppers ②
   - reed valve base ③

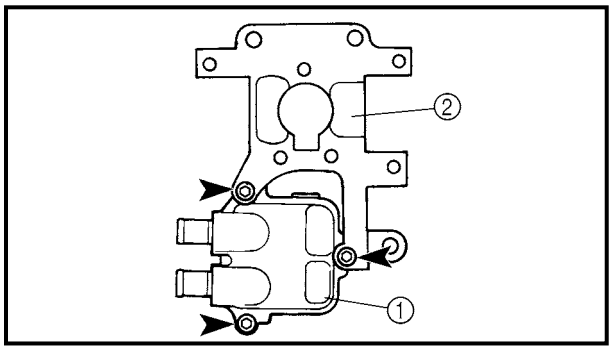

2. Install:
   - reed valve case ①
   - reed valve cover
   - bracket ②

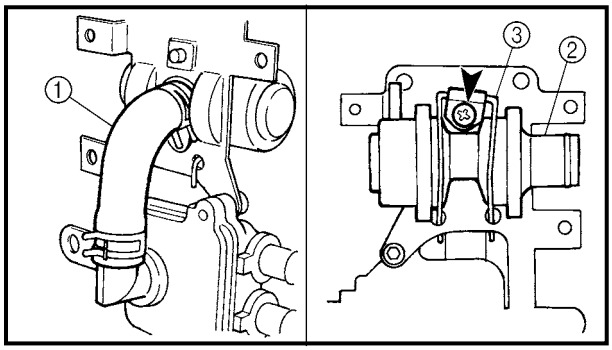

3. Install:
   - air cut valve to reed valve cover hose ①
   - air cut valve ②
   - air cut valve holder ③

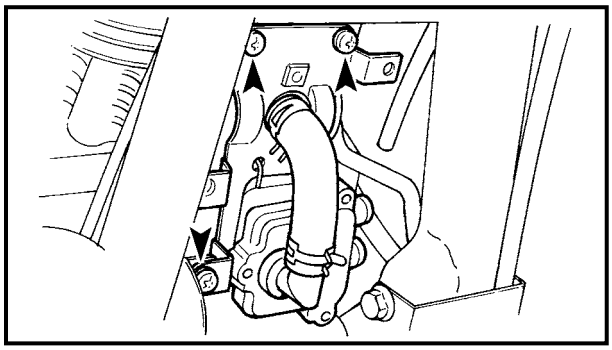

4. Install:
   - bracket
     (with the air cut valve and reed valve)

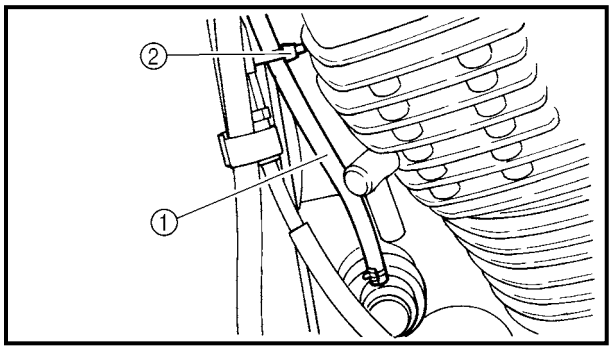

5. Install:
   - vacuum hose ①
   - plastic locking tie ②

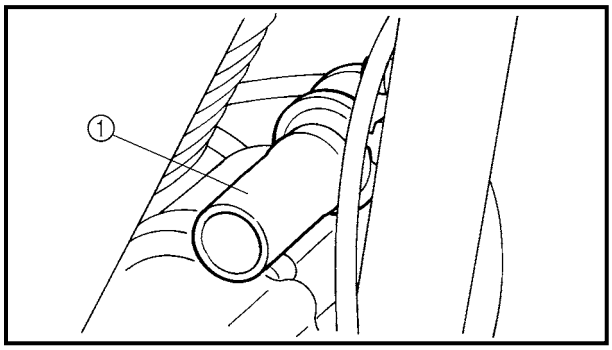

6. Install:
   - air cut valve to air filter hose ①

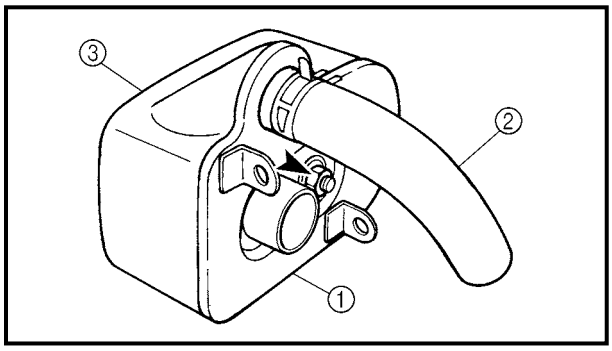

7. Install:
   - air filter ①
   - air filter hose ②
   - air filter cover ③

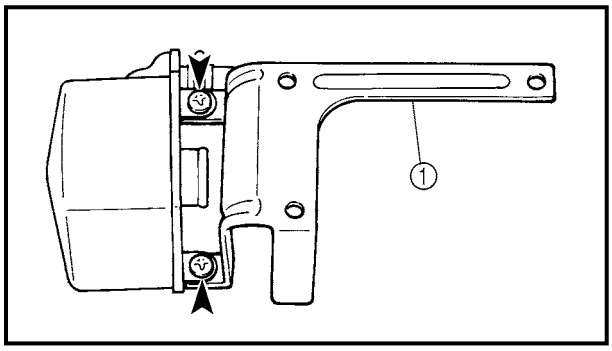

8. Install:
   - air filter bracket ①

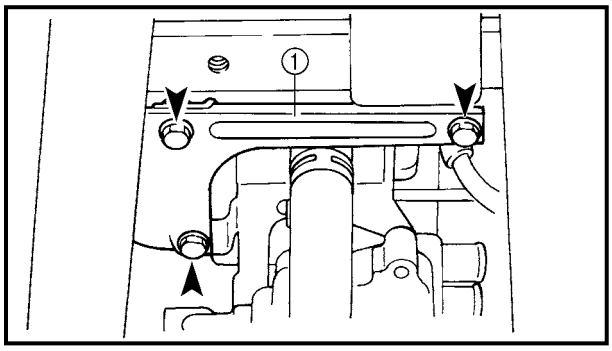

9. Install:
   - air filter case assembly ①

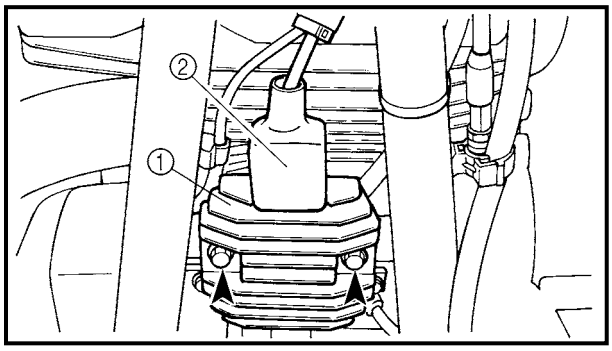

10. Install:
    - rectifier/regulator ①
11. Connect:
    - rectifier/regulator coupler ②

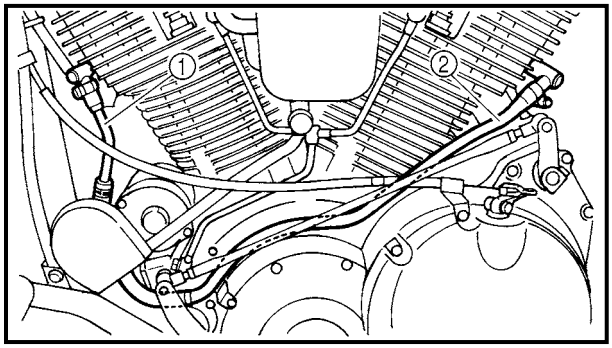

12. Install:
    - gaskets
    - reed valve case to front cylinder head pipe ①
    - reed valve case to front cylinder head hose
    - reed valve case to rear cylinder head pipe ②
    - reed valve case to rear cylinder head hose

13. Install:
- fuel tank
  Refer to “FUEL TANK” in chapter 3.

CONTENTS
ELECTRICAL SYSTEM

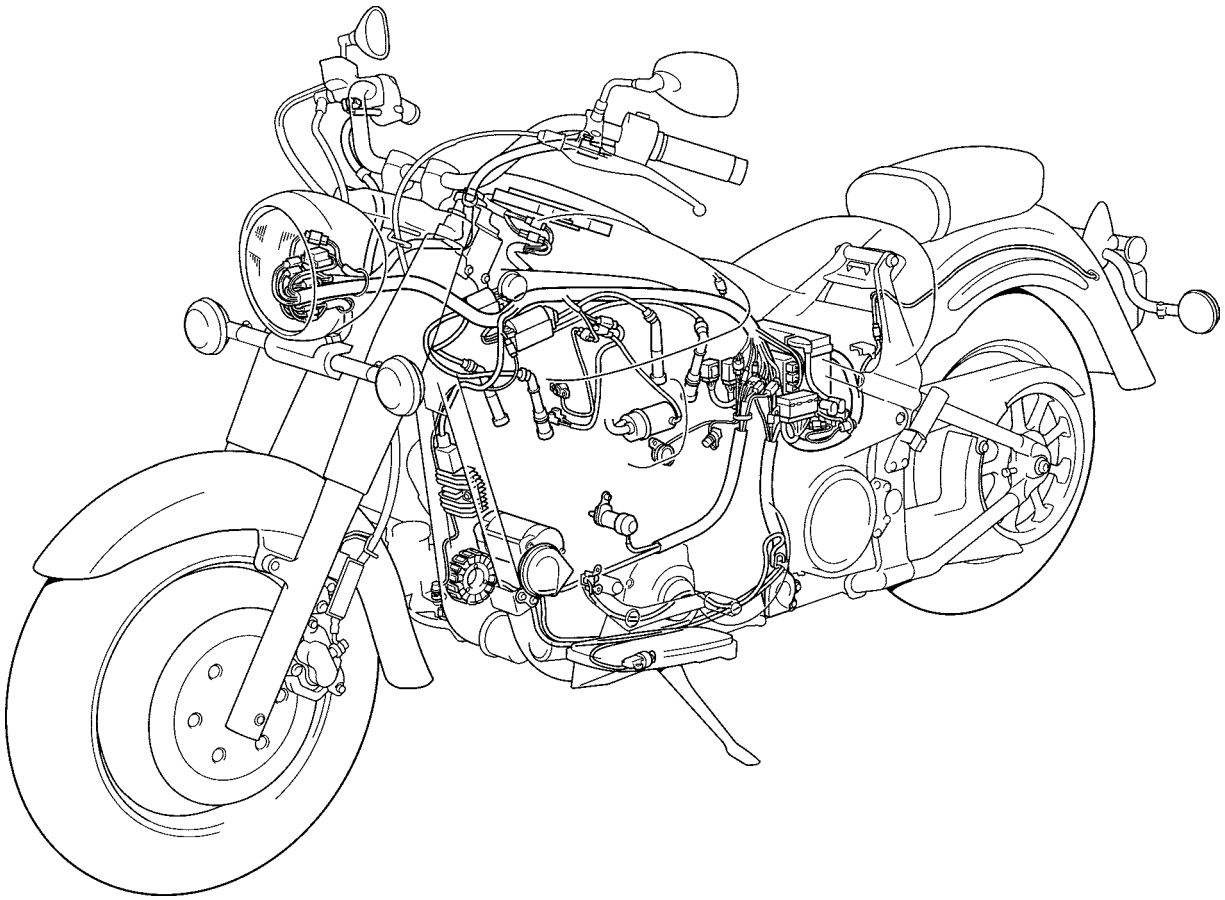

ELECTRICAL COMPONENTS 7-1

ARRANGEMENT OF THE ELECTRICAL COMPONENTS AND COUPLERS 7-2

SWITCHES 7-6
CHECKING SWITCH CONTINUITY 7-6

CHECKING THE SWITCHES 7-7

CHECKING THE BULBS AND BULB SOCKETS 7-9
TYPES OF BULBS 7-9
CHECKING THE CONDITION OF THE BULBS 7-9
CHECKING THE CONDITION OF THE BULB SOCKETS 7-11
CHECKING THE LEDs 7-11

IGNITION SYSTEM 7-12
CIRCUIT DIAGRAM 7-12
TROUBLESHOOTING 7-13

ELECTRIC STARTING SYSTEM 7-17
CIRCUIT DIAGRAM 7-17
STARTING CIRCUIT CUTOFF SYSTEM OPERATION 7-18
TROUBLESHOOTING 7-19

STARTER MOTOR 7-23
CHECKING THE STARTER MOTOR 7-25
ASSEMBLING THE STARTER MOTOR 7-26
INSTALLING THE STARTER MOTOR 7-27

CHARGING SYSTEM 7-28
CIRCUIT DIAGRAM 7-28
TROUBLESHOOTING 7-29

LIGHTING SYSTEM 7-31
CIRCUIT DIAGRAM 7-31
TROUBLESHOOTING 7-32
CHECKING THE LIGHTING SYSTEM 7-33

SIGNALING SYSTEM 7-37
CIRCUIT DIAGRAM 7-37
TROUBLESHOOTING 7-39
CHECKING THE SIGNALING SYSTEM 7-40

FUEL PUMP SYSTEM 7-46
CIRCUIT DIAGRAM 7-46
FUEL PUMP CIRCUIT OPERATION 7-47
TROUBLESHOOTING 7-48
CHECKING THE FUEL PUMP 7-50

CARBURETOR HEATING SYSTEM 7-51
CIRCUIT DIAGRAM 7-51
TROUBLESHOOTING 7-52

SELF-DIAGNOSIS 7-55
TROUBLESHOOTING 7-57

ESA00729

ELECTRICAL SYSTEM

ELECTRICAL COMPONENTS

① Wire harness
② Main switch
③ Front brake light switch
④ Ignition coils
⑤ Throttle position sensor
⑥ Clutch switch
⑦ Decompression solenoid
⑧ Relay unit
⑨ Turn signal relay
⑩ Ignitor unit
⑪ Battery
⑫ Starter relay
⑬ Main fuse
⑭ Thermo switch
⑮ Fuse box
⑯ Speed sensor
⑰ Horns
⑱ Neutral switch
⑲ Sidestand switch
⑳ Pickup coil
㉑ Stator coil assembly
㉒ Rear brake light switch
㉓ Rectifier/regulator

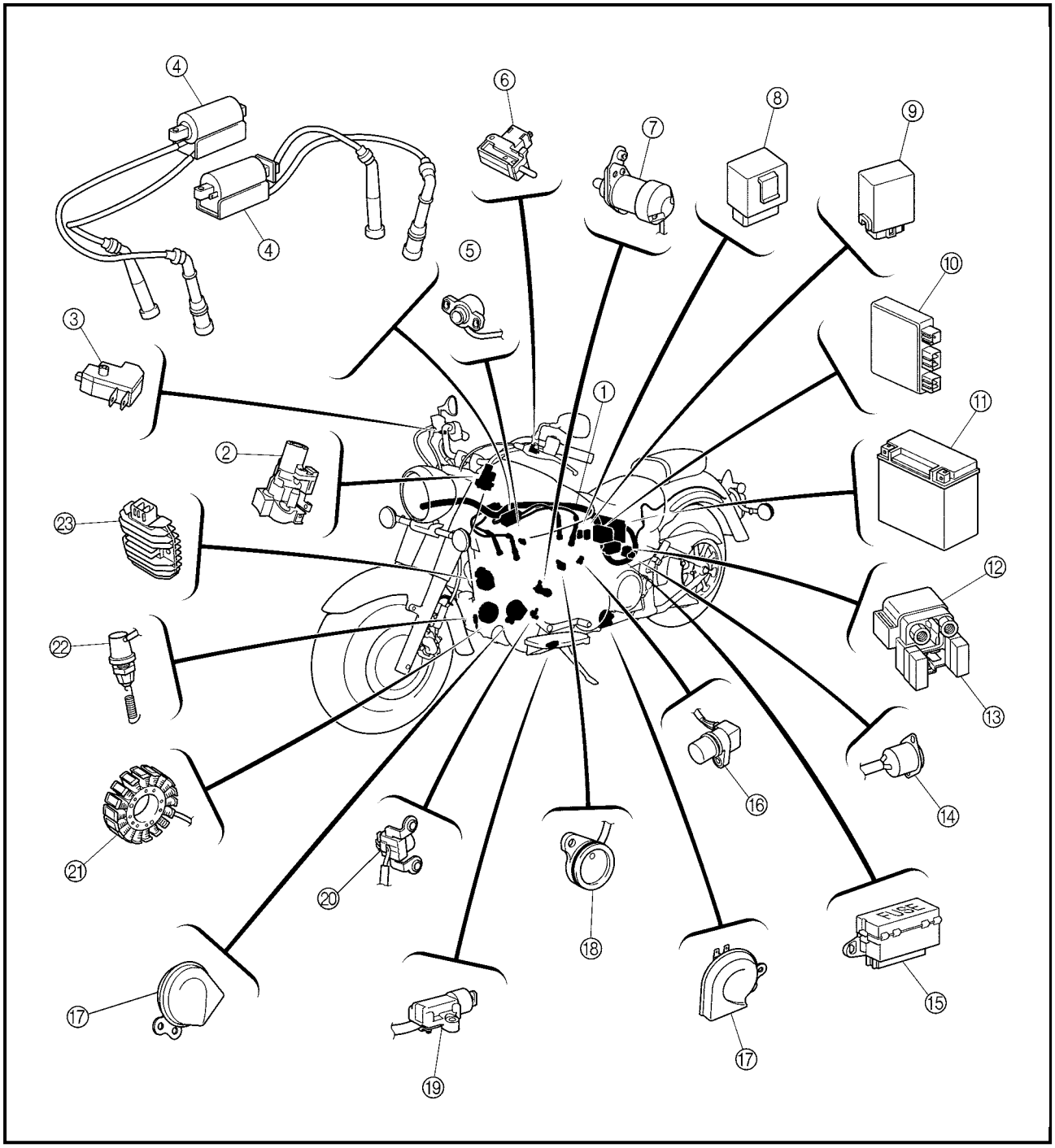

ARRANGEMENT OF THE ELECTRICAL COMPONENTS AND COUPLERS

① Right handlebar switch coupler, left handlebar switch couplers and front turn signal connectors
② Headlight coupler

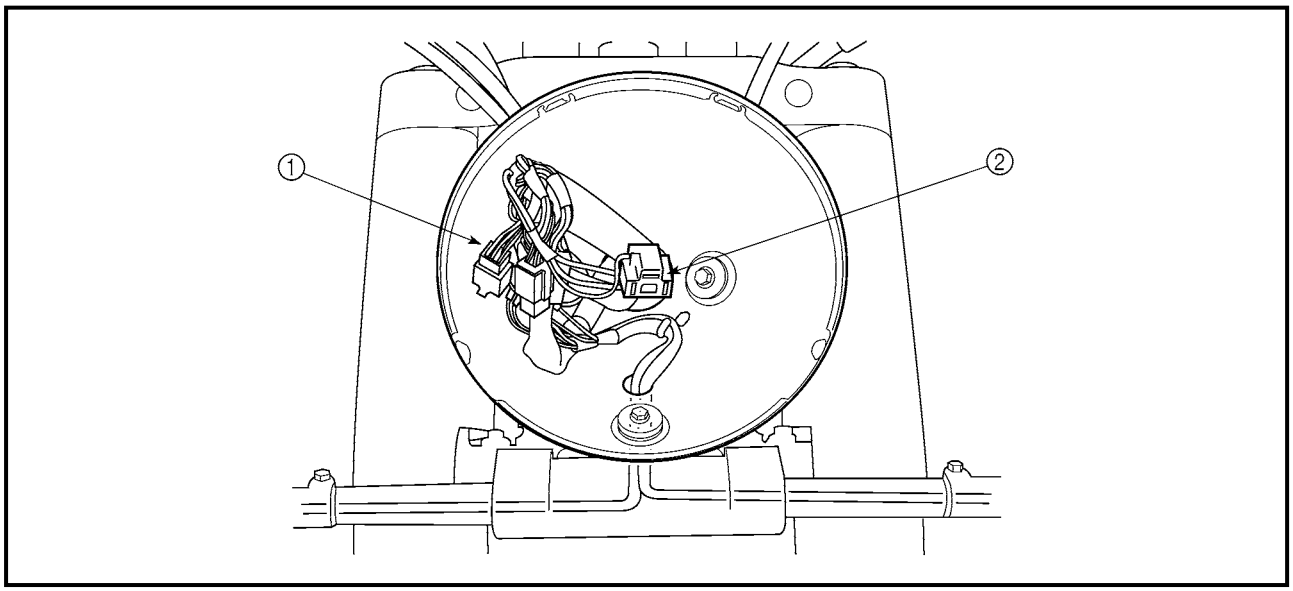

① Tail/brake light connectors and rear turn signal connectors

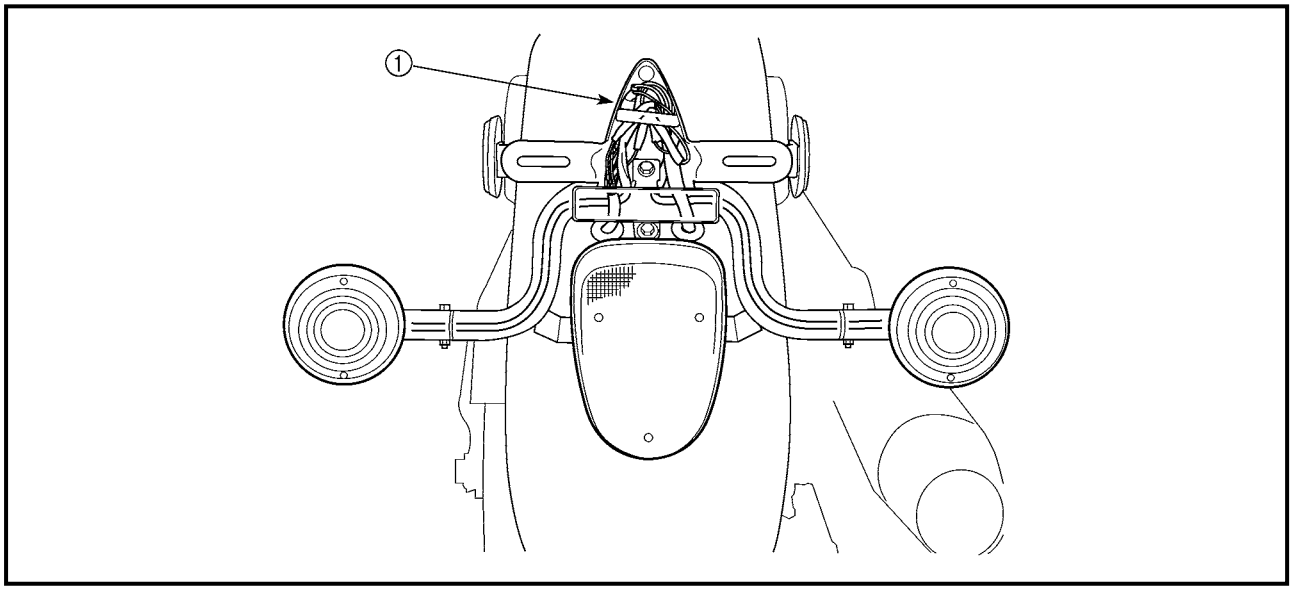

① Spark plug cap #3
② Rear brake light switch coupler
③ Ignition coil (front cylinder)
④ Meter assembly couplers
⑤ Carburetor heater sub-wire harness coupler
⑥ Throttle position sensor coupler
⑦ Fuel sender coupler
⑧ Spark plug cap #2
⑨ Spark plug cap #1
⑩ Fuel pump
⑪ Fuel pump coupler

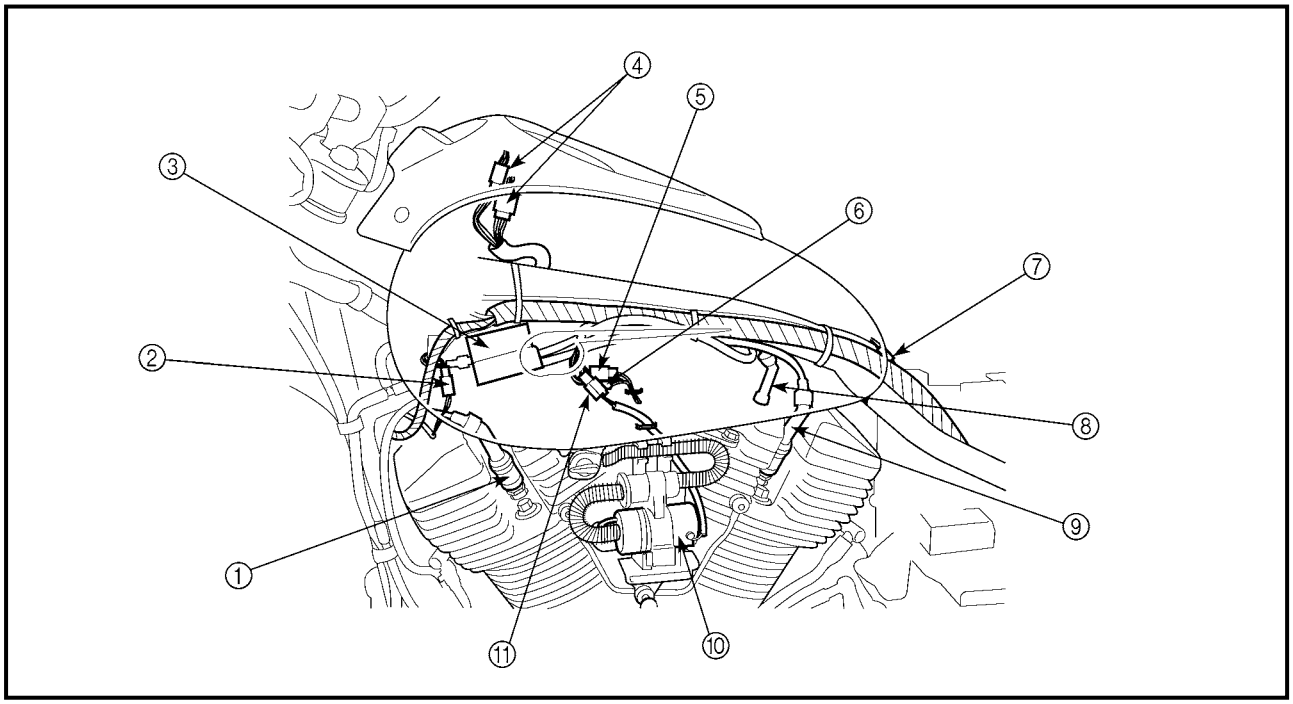

① Rear brake light switch lead
② Rectifier/regulator
③ Rectifier/regulator coupler
④ Starter motor
⑤ Starter motor lead
⑥ Horn coupler
⑦ Horn
⑧ Pickup coil
⑨ Sidestand switch

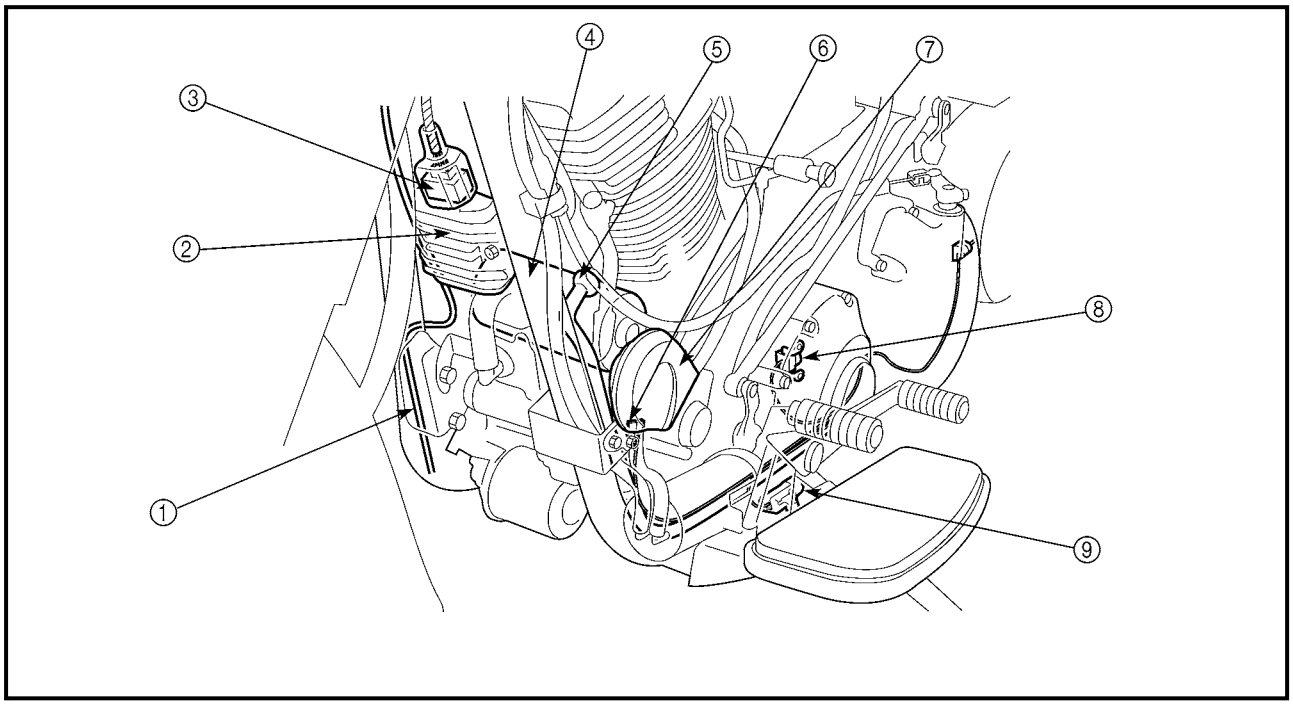

① Fuse box
② Stator coil coupler, decompression solenoid couplers, pickup coil coupler, speed sensor coupler, neutral switch connector and sidestand switch coupler
③ Battery negative lead
④ Battery positive lead
⑤ Battery
⑥ Ignitor unit
⑦ Tail/brake light and rear turn signal light sub-wire harness coupler
⑧ Starter relay
⑨ Main fuse
⑩ Starter relay coupler
⑪ Thermo switch
⑫ Thermo switch coupler
⑬ Horn
⑭ Horn coupler

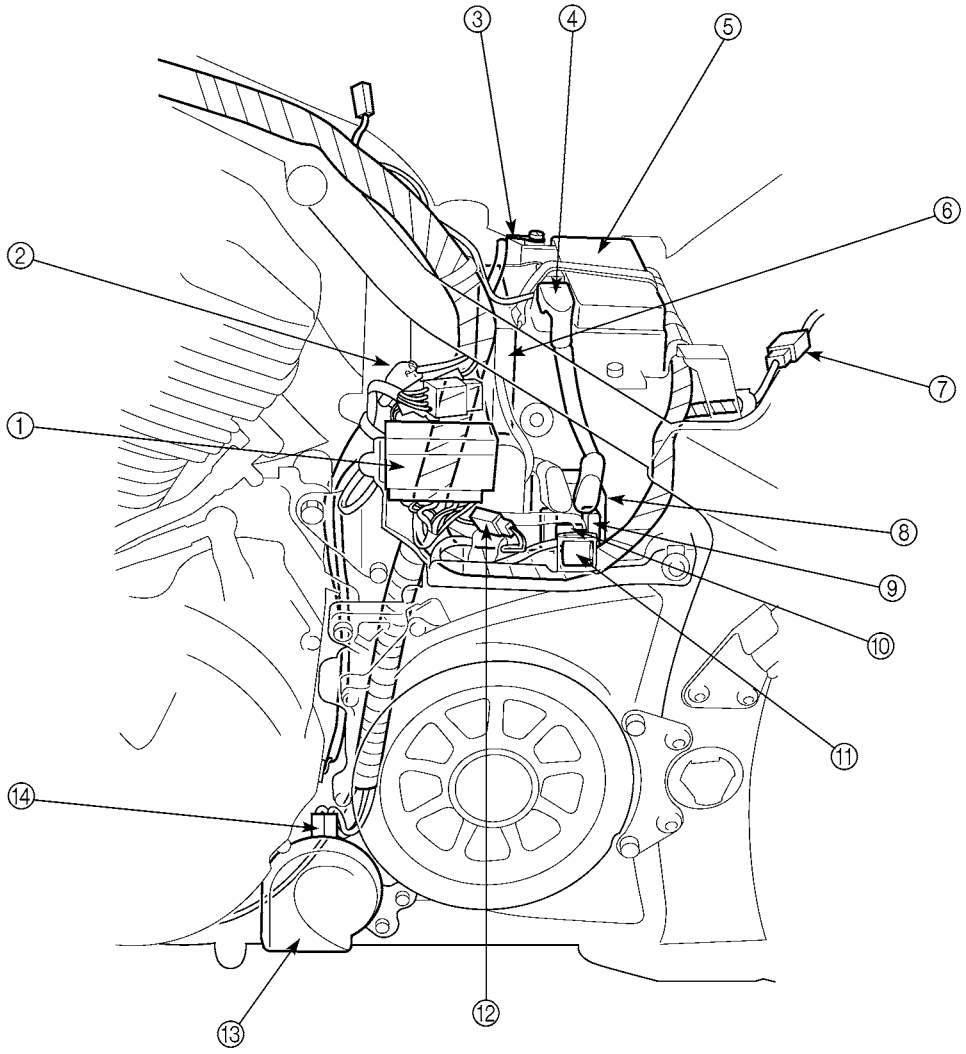

① Carburetor heater
② Throttle position sensor
③ Ignition coil (rear cylinder)
④ Main switch coupler
⑤ Main switch
⑥ Solenoid valve coupler
⑦ Solenoid valve
⑧ Spark plug cap #4
⑨ Rear brake light switch

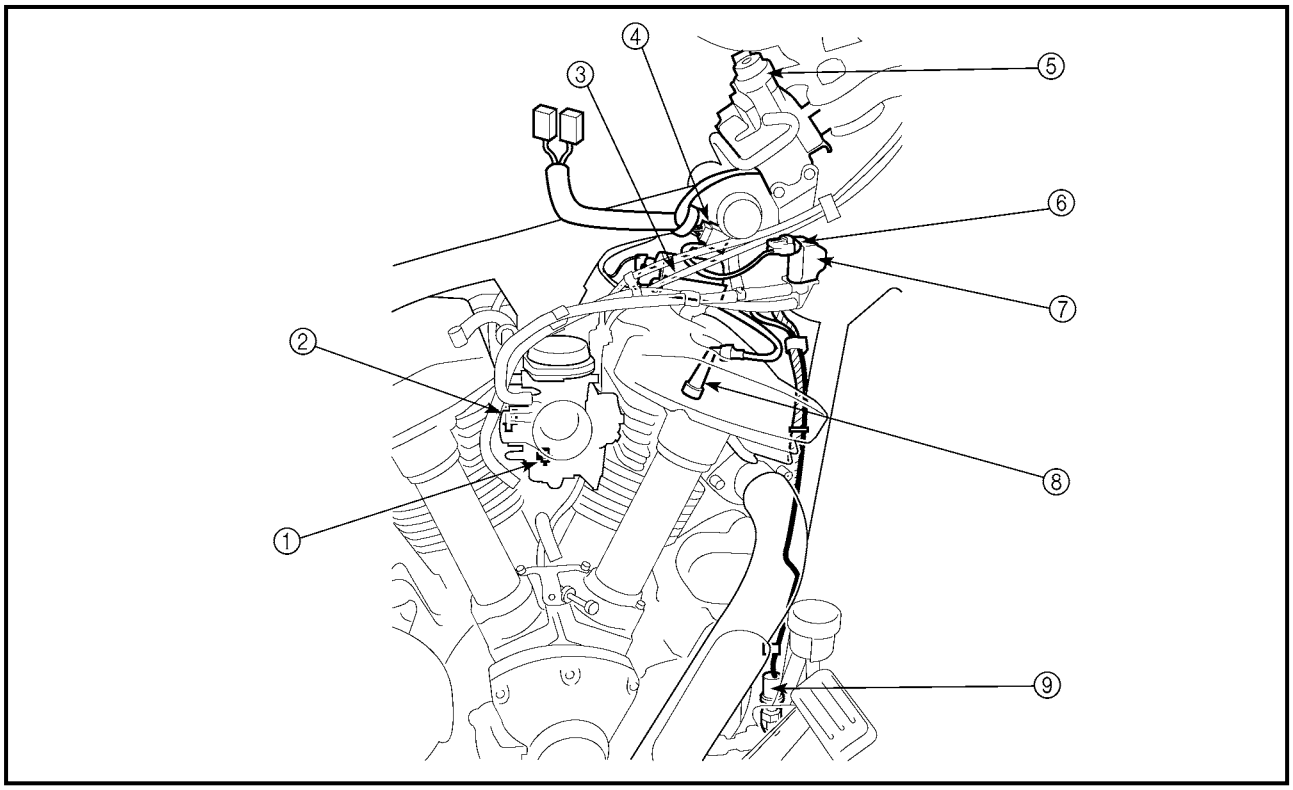

① Diode
② Turn signal relay
③ Relay unit
④ Stator coil
⑤ Decompression solenoid
⑥ Neutral switch
⑦ Speed sensor
⑧ Relay unit coupler
⑨ Turn signal relay coupler

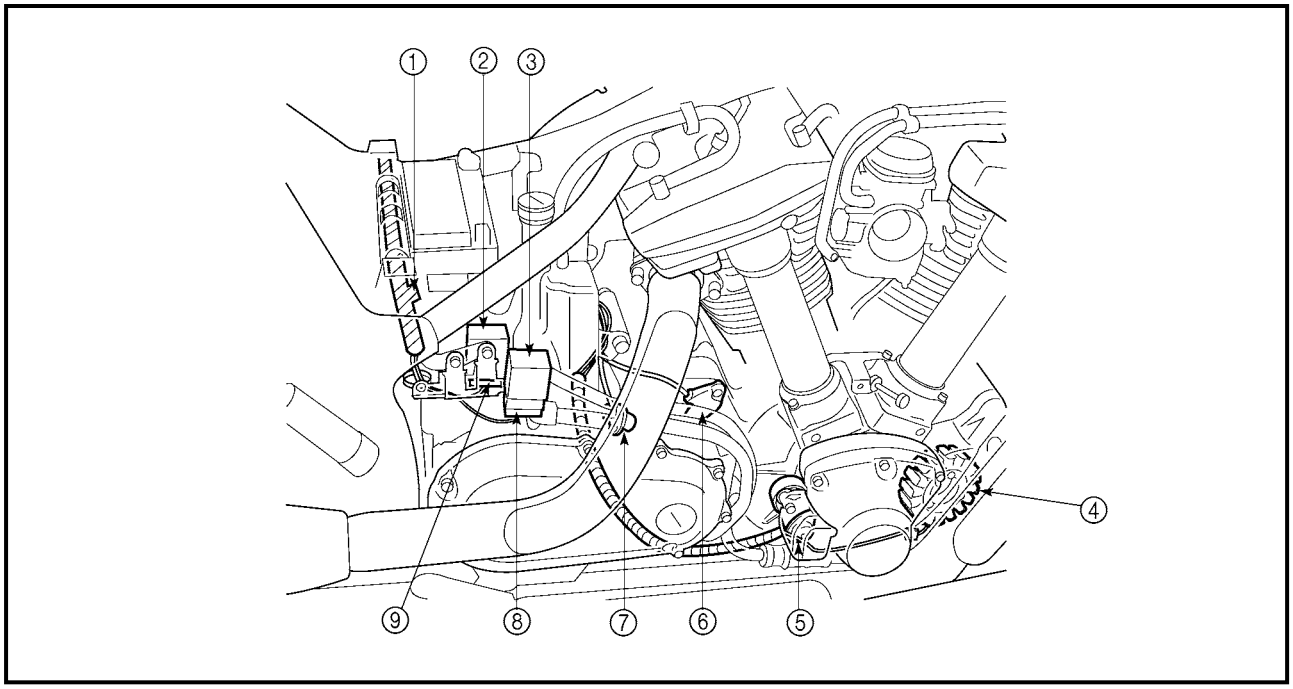

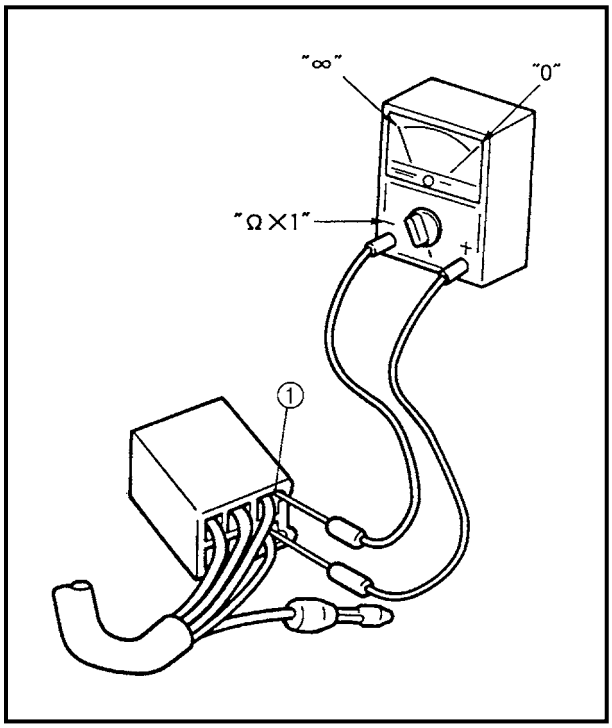

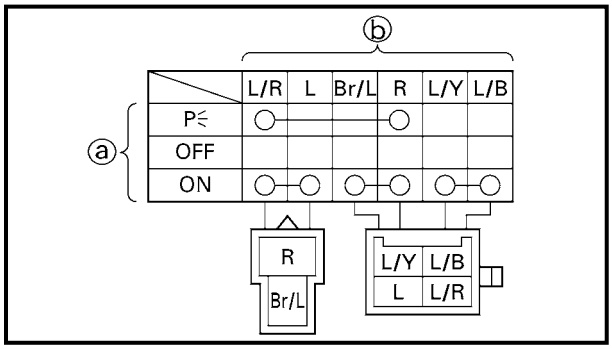

EAS00730
SWITCHES

CHECKING SWITCH CONTINUITY

Check each switch for continuity with the pocket tester. If the continuity reading is incorrect, check the wiring connections and if necessary, replace the switch.

CAUTION:

Never insert the tester probes into the coupler terminal slots ①. Always insert the probes from the opposite end of the coupler, taking care not to loosen or damage the leads.

Pocket tester
YU-03112

NOTE:
- Before checking for continuity, set the pocket tester to "0" and to the "Ω × 1" range.
- When checking for continuity, switch back and forth between the switch positions a few times.

The terminal connections for switches (e.g., main switch, engine stop switch) are shown in an illustration similar to the one on the left.
The switch positions ⓐ are shown in the far left column and the switch lead colors ⓑ are shown in the top row in the switch illustration.

NOTE:
"○——○" indicates a continuity of electricity between switch terminals (i.e., a closed circuit at the respective switch position).

The example illustration on the left shows that:
There is continuity between red and brown/blue, and between blue/yellow and blue/black when the switch is set to "ON".

EAS00731
CHECKING THE SWITCHES

Check each switch for damage or wear, proper connections, and also for continuity between the terminals. Refer to “CHECKING SWITCH CONTINUITY”.

Damage/wear → Repair or replace the switch.
Improperly connected → Properly connect.
Incorrect continuity reading → Replace the switch.

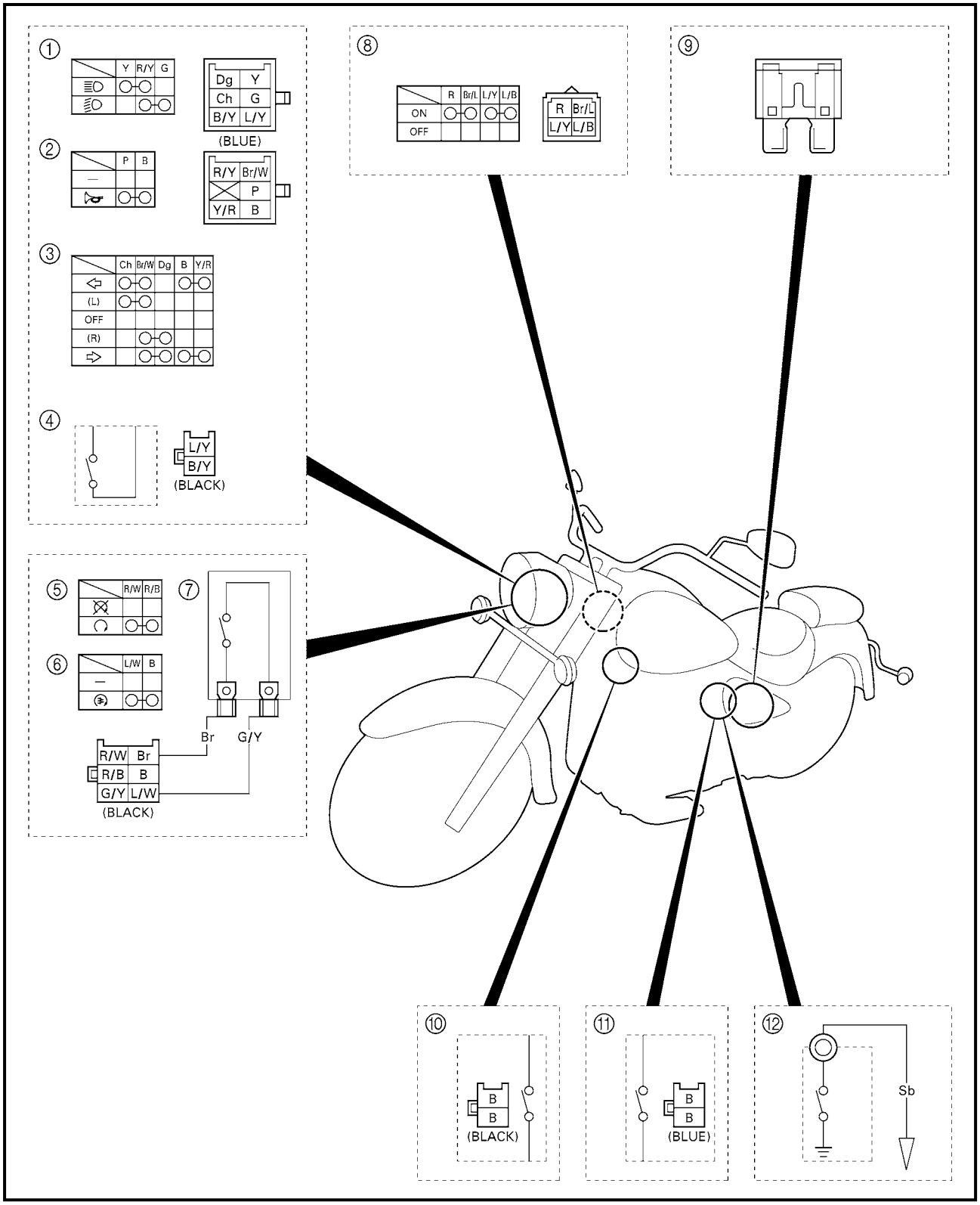

① Dimmer switch
② Horn switch
③ Turn signal switch
④ Clutch switch
⑤ Engine stop switch
⑥ Start switch
⑦ Front brake light switch
⑧ Main switch
⑨ Fuse
⑩ Rear brake light switch
⑪ Sidestand switch
⑫ Neutral switch

EAS00732

CHECKING THE BULBS AND BULB SOCKETS

Check each bulb and bulb socket for damage or wear, proper connections, and also for continuity between the terminals.

Damage/wear → Repair or replace the bulb, bulb socket or both.

Improperly connected → Properly connect.

Incorrect continuity reading → Repair or replace the bulb, bulb socket or both.

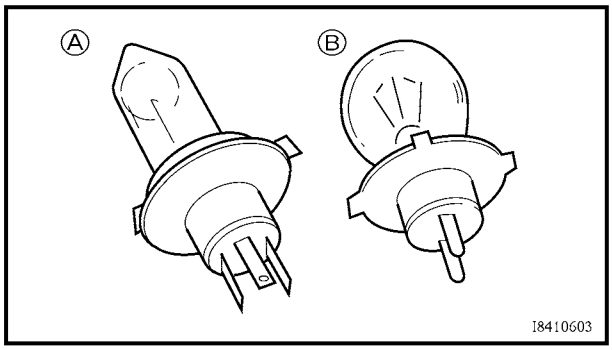

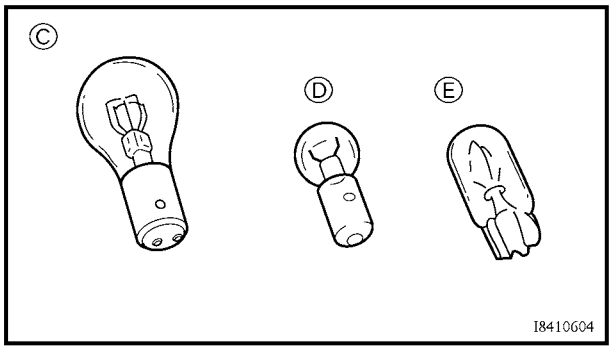

TYPES OF BULBS

The bulbs used on this motorcycle are shown in the illustration on the left.

- Bulbs Ⓐ and Ⓑ are used for the headlights and usually use a bulb holder which must be detached before removing the bulb. The majority of these bulbs can be removed from their respective socket by turning them counterclockwise.
- Bulb Ⓒ is used for turn signal and tail/brake lights and can be removed from the socket by pushing and turning the bulb counterclockwise.
- Bulbs Ⓓ and Ⓔ are used for meter and indicator lights and can be removed from their respective socket by carefully pulling them out.

CHECKING THE CONDITION OF THE BULBS

The following procedure applies to all of the bulbs.

1. Remove:
   - bulb

WARNING

Since the headlight bulb gets extremely hot, keep flammable products and your hands away from the bulb until it has cooled down.

CAUTION:

- **Be sure to hold the socket firmly when removing the bulb. Never pull the lead, otherwise it may be pulled out of the terminal in the coupler.**
- **Avoid touching the glass part of the headlight bulb to keep it free from oil, otherwise the transparency of the glass, the life of the bulb and the luminous flux will be adversely affected. If the headlight bulb gets soiled, thoroughly clean it with a cloth moistened with alcohol or lacquer thinner.**

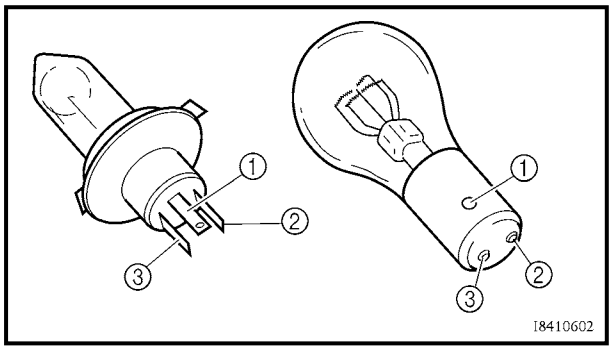

2. Check:
   - bulb (for continuity)
     (with the pocket tester)
     No continuity → Replace.

	Pocket tester **YU-03112**

NOTE:
Before checking for continuity, set the pocket tester to "0" and to the "Ω × 1" range.

▼▼▼▼▼▼▼▼▼▼▼▼▼▼▼▼▼▼▼▼▼▼▼▼▼▼▼▼▼▼

a. Connect the tester positive probe to terminal ① and the tester negative probe to terminal ②, and check the continuity.

b. Connect the tester positive probe to terminal ① and the tester negative probe to terminal ③, and check the continuity.

c. If either of the readings indicate no continuity, replace the bulb.

▲▲▲▲▲▲▲▲▲▲▲▲▲▲▲▲▲▲▲▲▲▲▲▲▲▲▲▲▲▲

CHECKING THE CONDITION OF THE BULB SOCKETS

The following procedure applies to all of the bulb sockets.

1. Check:
   - bulb socket (for continuity)
     (with the pocket tester)
     No continuity → Replace.

Pocket tester
YU-03112

NOTE:

Check each bulb socket for continuity in the same manner as described in the bulb section; however, note the following.

a. Install a good bulb into the bulb socket.

b. Connect the pocket tester probes to the respective leads of the bulb socket.

c. Check the bulb socket for continuity. If any of the readings indicate no continuity, replace the bulb socket.

CHECKING THE LEDs

The following procedure applies to all of the LEDs.

1. Check:
   LED (for proper operation)

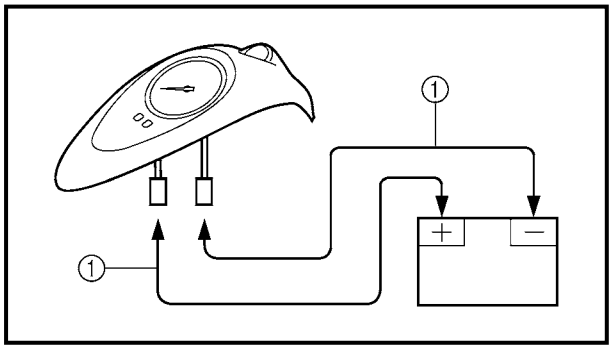

a. Disconnect the meter assembly coupler (meter assembly side).

b. Connect two jumper leads ① from the battery terminals to the respective coupler terminals as shown.

⚠ WARNING

- **A wire that is used as a jumper lead must have at least the same capacity of the battery lead, otherwise the jumper lead may burn.**
- **This check is likely to produce sparks, therefore make sure that no flammable gas or fluid is in the vicinity.**

c. When the jumper leads are connected to the terminals the respective LED should illuminate.
   Does not light → Replace the meter assembly.

EB802001

IGNITION SYSTEM

CIRCUIT DIAGRAM

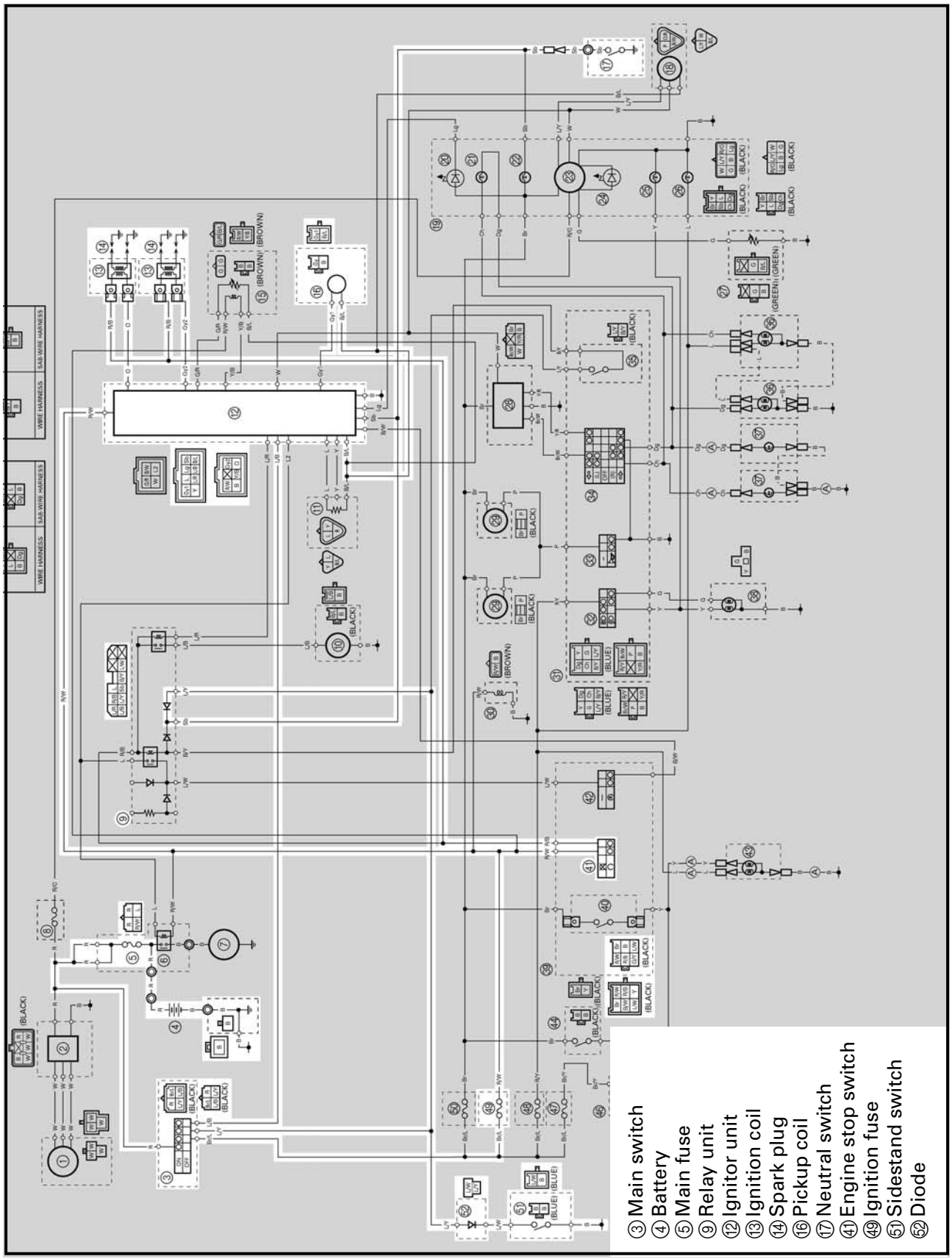

EB802011
TROUBLESHOOTING

The ignition system fails to operate (no spark or intermittent spark).

Check:
1. main and ignition fuses
2. battery
3. spark plugs
4. ignition spark gap
5. spark plug cap resistance
6. ignition coil resistance
7. pickup coil resistance
8. main switch
9. engine stop switch
10. neutral switch
11. sidestand switch
12. diode
13. relay unit (diode)
14. wiring
    (of the entire ignition system)

NOTE:
- Before troubleshooting, remove the following part(s):
1) rider seat
2) fuel tank
3) side covers
4) ignition coils
5) headlight lens unit
- Troubleshoot with the following special tool(s).

Dynamic spark tester
YM-34487
Pocket tester
YU-03112

EB802400

1.Main and ignition fuses

- Check the main and ignition fuses for continuity.
  Refer to "CHECKING THE FUSES" in chapter 3.
- Are the main and ignition fuses OK?

YES → NO → Replace the fuse(s).

EB802401

2.Battery

- Check the condition of the battery.
  Refer to "CHECKING AND CHARGING THE BATTERY" in chapter 3.

Minimum open-circuit voltage
12.8 V or more at 20 °C (68 °F)

- Is the battery OK?

YES → NO →
- Clean the battery terminals.
- Recharge or replace the battery.

EB802403

3.Spark plugs

The following procedure applies to all of the spark plugs.
- Check the condition of the spark plug.
- Check the spark plug type.
- Measure the spark plug gap.
  Refer to "CHECKING THE SPARK PLUGS" in chapter 3.

Standard spark plug
DPR7EA-9 (NGK)
X22EPR-U9 (DENSO)
Spark plug gap
0.8 ~ 0.9 mm (0.031 ~ 0.035 in)

- Is the spark plug in good condition, is it of the correct type, and its gap within specification?

YES → NO → Re-gap or replace the spark plug.

EB802405

4.Ignition spark gap

The following procedure applies to all of the spark plugs.
- Disconnect the spark plug cap from the spark plug.
- Connect the dynamic spark tester ① as shown.
  ② Spark plug cap
- Set the main switch to "ON".
- Measure the ignition spark gap ⓐ.
- Crank the engine by pushing the start switch and gradually increase the spark gap until a misfire occurs.

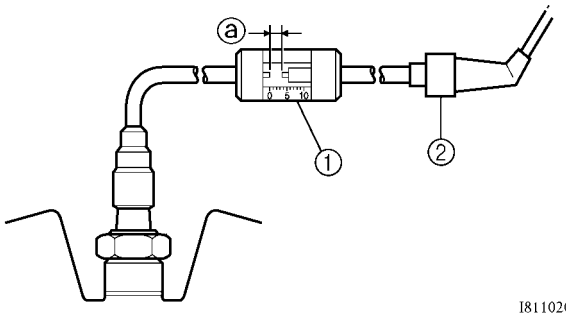

I8110201

Minimum ignition spark gap
6 mm (0.24 in)

- Is there a spark and is the spark gap within specification?

NO → The ignition system is OK.

YES ↓

EB802407

5.Spark plug cap resistance

The following procedure applies to all of the spark plug caps.
- Disconnect the spark plug cap from the spark plug.
- Connect the pocket tester (Ω × 1k) to the spark plug cap as shown.
- Measure the spark plug cap resistance.

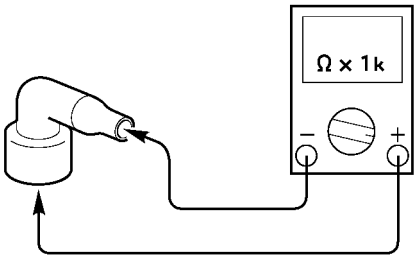

I8040101

Spark plug cap resistance
10 kΩ at 20 °C (68 °F)

- Is the spark plug cap OK?

YES ↓

NO → Replace the spark plug cap.

EB802409

6.Ignition coil resistance

The following procedure applies to all of the ignition coils.
- Disconnect the ignition coil connectors from the ignition coil terminals.
- Connect the pocket tester (Ω × 1) to the ignition coil as shown.

Tester positive probe → red/black
Tester negative probe → orange (gray)

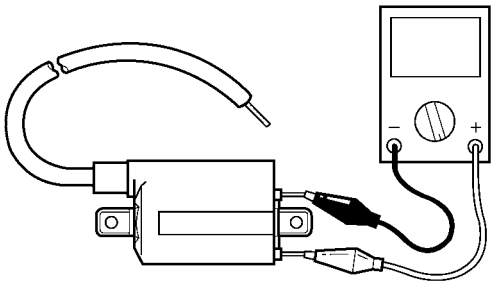

I8110104

- Measure the primary coil resistance.

Primary coil resistance
1.53 ~ 2.07 Ω at 20 °C (68 °F)

- Connect the pocket tester (Ω × 1k) to the ignition coil as shown.
- Measure the secondary coil resistance.

Tester positive probe →
spark plug lead ①
Tester negative probe →
spark plug lead ②

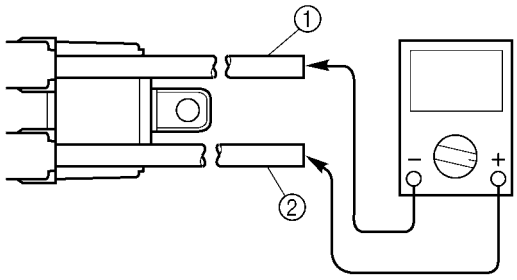

Secondary coil resistance
12 ~ 18 kΩ at 20 ˚C (68 ˚F)

- Is the ignition coil OK?

YES → NO → Replace the ignition coil.

EB802410

7.Pickup coil resistance

- Disconnect the pickup coil coupler from the wire harness.
- Connect the pocket tester (Ω × 100) to the pickup coil coupler.

Tester positive probe → gray ①
Tester negative probe → black ②

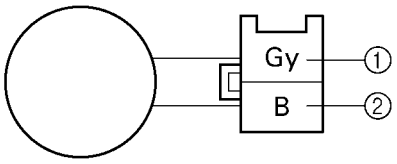

- Measure the pickup coil resistance.

Pickup coil resistance
248 ~ 372 Ω at 20 ˚C (68 ˚F)
(between gray and black)

- Is the pickup coil OK?

YES → NO → Replace the pickup coil.

EB802411

8.Main switch

- Check the main switch for continuity.
  Refer to "CHECKING THE SWITCHES".
- Is the main switch OK?

YES → NO → Replace the main switch.

EB802412

9.Engine stop switch

- Check the engine stop switch for continuity.
  Refer to "CHECKING THE SWITCHES".
- Is the engine stop switch OK?

YES → NO → Replace the right handlebar switch.

EB802413

10.Neutral switch

- Check the neutral switch for continuity.
  Refer to "CHECKING THE SWITCHES".
- Is the neutral switch OK?

YES → NO → Replace the neutral switch.

EB802414

11.Sidestand switch

- Check the sidestand switch for continuity.
  Refer to "CHECKING THE SWITCHES".
- Is the sidestand switch OK?

YES → NO → Replace the sidestand switch.

12.Diode

- Remove the diode from the coupler.
- Connect the pocket tester (Ω × 1) to the diode terminals as shown.
- Check the diode for continuity as follows.

Tester positive probe → blue/white ① **Tester negative probe → blue/yellow ②**	**Continuity**
Tester positive probe → blue/yellow ② **Tester negative probe → blue/white ①**	**No continuity**

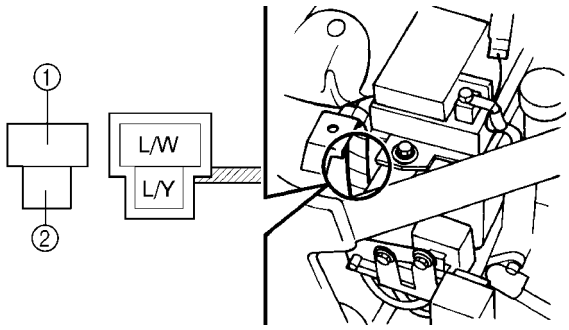

NOTE:
When you switch the tester's positive and negative probes, the readings in the above chart will be reversed.

- Are the tester readings correct?

YES → NO → Replace the diode.

EB802415

13.Relay unit (diode)

- Remove the relay unit from the coupler.
- Connect the pocket tester (Ω × 1) to the relay unit terminals as shown.
- Check the diode for continuity as follows.

Tester positive probe → sky blue ① **Tester negative probe → blue/yellow ②**	**Continuity**
Tester positive probe → blue/yellow ② **Tester negative probe → sky blue ①**	**No continuity**

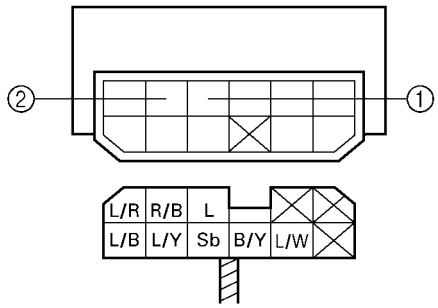

NOTE:
When you switch the tester's positive and negative probes, the readings in the above chart will be reversed.

- Are the tester readings correct?

YES → NO → Replace the relay unit.

EAS00754

14.Wiring

- Check the entire ignition system's wiring.
  Refer to "CIRCUIT DIAGRAM".
- Is the ignition system's wiring properly connected and without defects?

YES → Replace the ignitor unit.

NO → Properly connect or repair the ignition system's wiring.

EB803000

ELECTRIC STARTING SYSTEM

CIRCUIT DIAGRAM

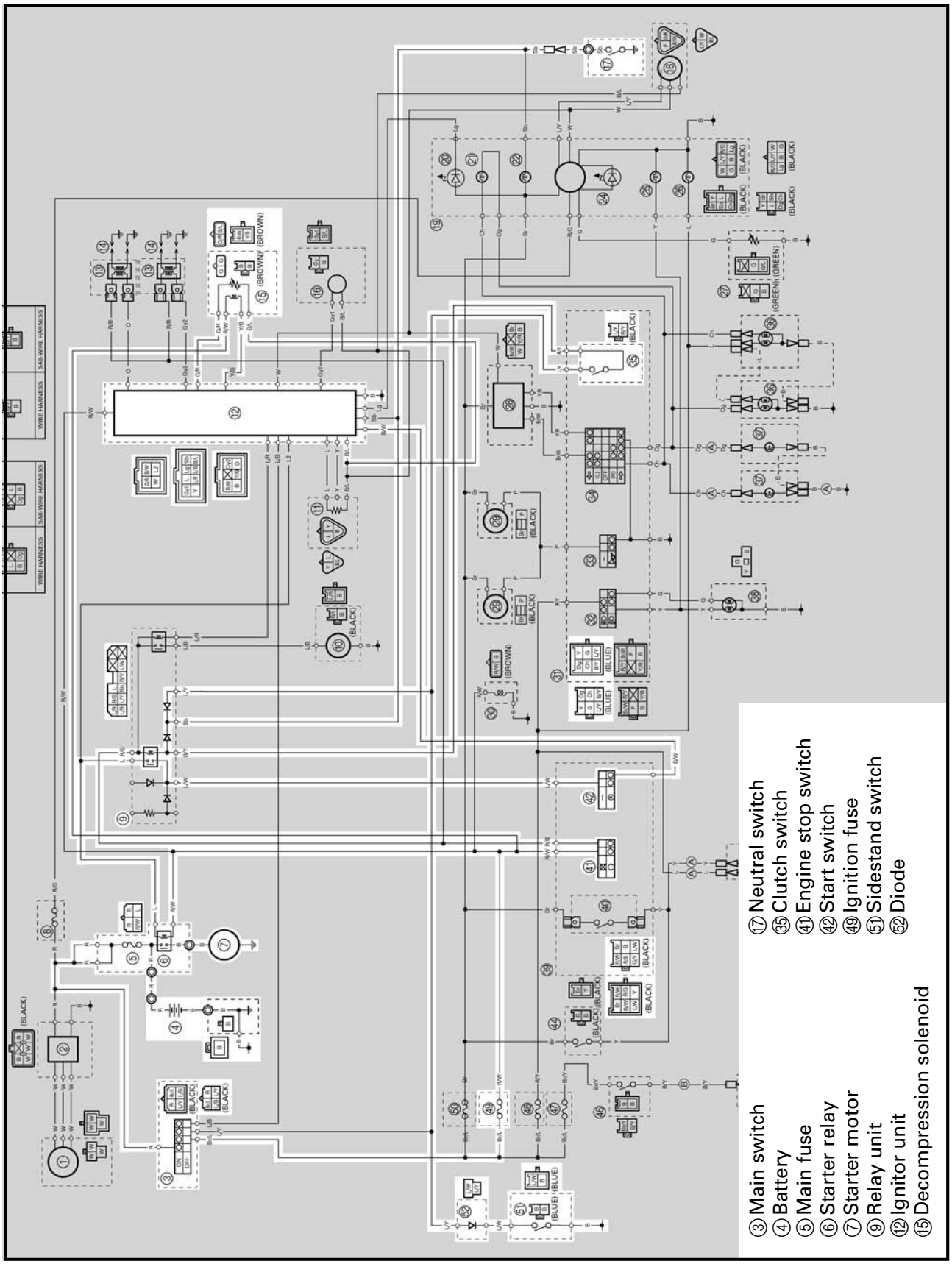

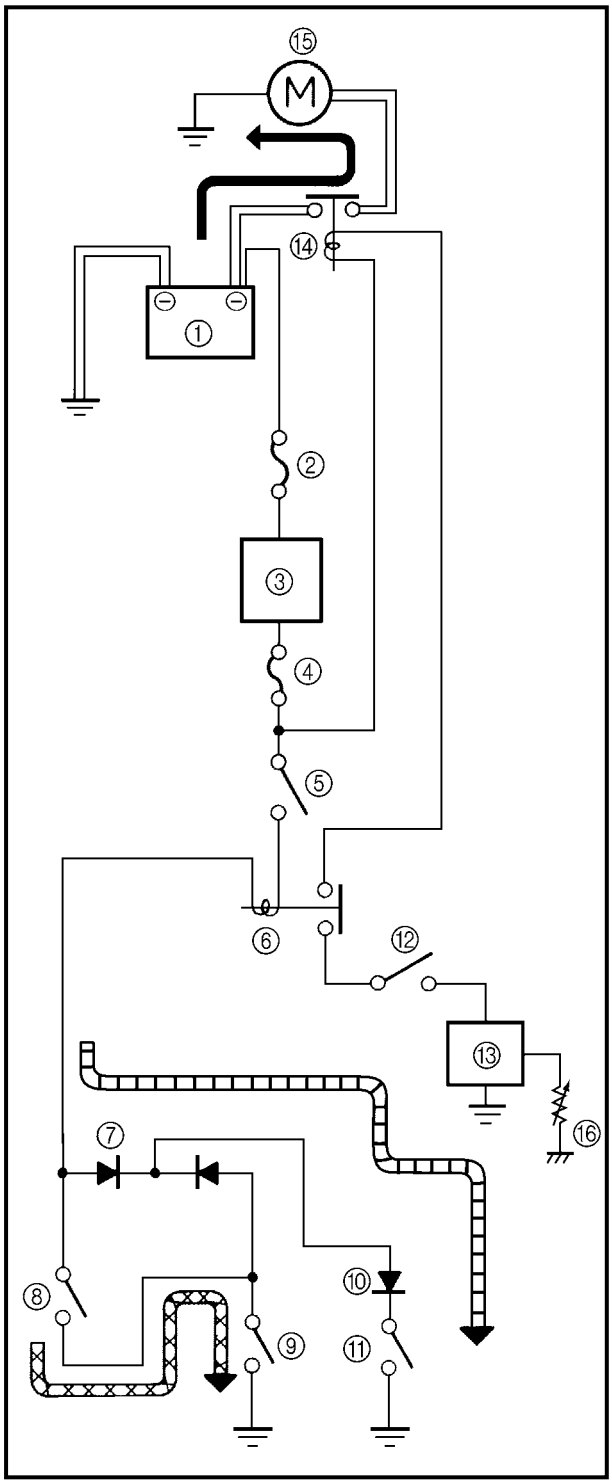

EB803010

STARTING CIRCUIT CUTOFF SYSTEM OPERATION

If the engine stop switch is set to "◯" and the main switch is set to "ON" (both switches are closed), the starter motor can only operate if at least one of the following conditions is met:

- The transmission is in neutral (the neutral switch is closed).
- The clutch lever is pulled to the handlebar (the clutch switch is closed) and the sidestand is up (the sidestand switch is closed).

The starting circuit cutoff relay prevents the starter motor from operating when neither of these conditions has been met. In this instance, the starting circuit cutoff relay is open so current cannot reach the starter motor. When at least one of the above conditions has been met the starting circuit cutoff relay is closed and the engine can be started by pressing the start switch.

WHEN THE TRANSMISSION IS IN NEUTRAL

WHEN THE SIDESTAND IS UP AND THE CLUTCH LEVER IS PULLED TO THE HANDLEBAR

① Battery
② Main fuse
③ Main switch
④ Ignition fuse
⑤ Engine stop switch
⑥ Starting circuit cutoff relay (relay unit)
⑦ Diode (relay unit)
⑧ Clutch switch
⑨ Sidestand switch
⑩ Diode
⑪ Neutral switch
⑫ Start switch
⑬ Ignitor unit
⑭ Starter relay
⑮ Starter motor
⑯ Decompression solenoid thermistor

EB803020
TROUBLESHOOTING

The starter motor fails to turn.

Check:
1. main and ignition fuses
2. battery
3. starter motor
4. relay unit (starting circuit cutoff relay)
5. relay unit (diode)
6. starter relay
7. main switch
8. engine stop switch
9. neutral switch
10. sidestand switch
11. diode
12. clutch switch
13. start switch
14. wiring (of the entire starting system)
15. decompression solenoid

NOTE:
- Before troubleshooting, remove the following part(s):
1) rider seat
2) fuel tank
3) side covers
4) headlight lens unit
- Troubleshoot with the following special tool(s).

Pocket tester YU-03112

EB802400
1.Main and ignition fuses

- Check the main and ignition fuses for continuity.
  Refer to "CHECKING THE FUSES" in chapter 3.
- Are the main and ignition fuses OK?

YES ⇩ NO ⇩

Replace the fuse(s).

EB802401
2.Battery

- Check the condition of the battery.
  Refer to "CHECKING AND CHARGING THE BATTERY" in chapter 3.

Open-circuit voltage
12.8 V or more at 20 ˚C (68 ˚F)

- Is the battery OK?

YES ⇩ NO ⇩

- Clean the battery terminals.
- Recharge or replace the battery.

EB803400
3.Starter motor

- Connect the battery positive terminal ① and starter motor lead ② with a jumper lead ③.

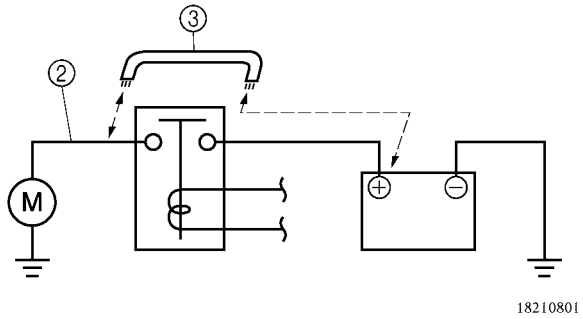

⚠ WARNING
- **A wire that is used as a jumper lead must have at least the same capacity of the battery lead, otherwise the jumper lead may burn.**
- **This check is likely to produce sparks, therefore make sure that no flammable gas or fluid is in the vicinity.**

- Does the starter motor turn?

YES ⇩ NO ⇩

Repair or replace the starter motor.

EB803402

4.Relay unit (starting circuit cutoff relay)

- Disconnect the relay unit from the coupler.
- Connect the pocket tester (Ω × 1) and battery (12 V) to the relay unit terminals as shown.

Battery positive terminal → red/black ①
Battery negative terminal → black/yellow ②

Tester positive probe → blue ③
Tester negative probe → blue/white ④

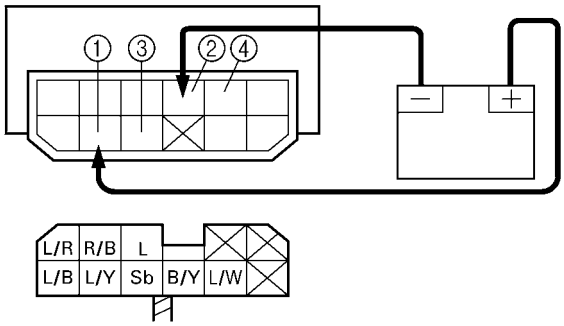

- Does the starting circuit cutoff relay have continuity between blue and blue/white?

YES

NO

Replace the relay unit.

EB803403

5.Relay unit (diode)

- Disconnect the relay unit from the coupler.
- Connect the pocket tester (Ω × 1) to the relay unit terminals as shown.
- Check the diode for continuity as follows.

Tester positive probe → sky blue ① **Tester negative probe → black/yellow ②**	**Continuity**
Tester positive probe → sky blue ① **Tester negative probe → blue/yellow ③**	
Tester positive probe → black/yellow ② **Tester negative probe → sky blue ①**	**No continuity**
Tester positive probe → blue/yellow ③ **Tester negative probe → sky blue ①**	

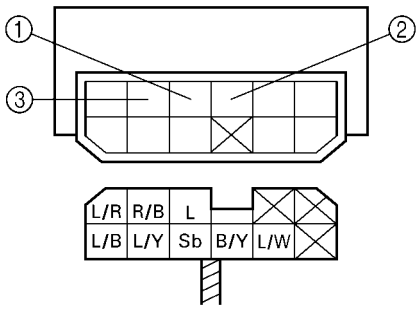

NOTE:
When you switch the tester's positive and negative probes, the readings in the above chart will be reversed.

- Are the tester readings correct?

YES

NO

Replace the relay unit.

EB803404

6.Starter relay

- Disconnect the starter relay from the coupler.
- Connect the pocket tester (Ω × 1) and battery (12 V) to the starter relay terminals as shown.

Battery positive terminal → red/white ①
Battery negative terminal → blue ②

Tester positive probe → red ③
Tester negative probe → black ④

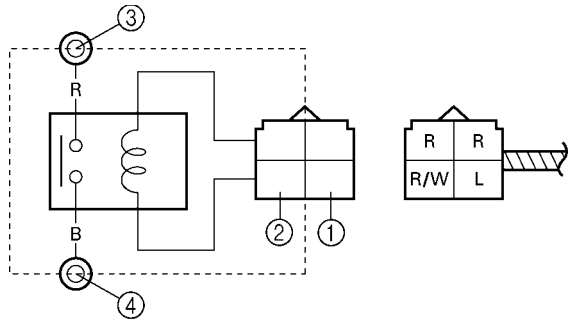

- Does the starter relay have continuity between red and black?

YES → NO → Replace the starter relay.

EB802411

7.Main switch

- Check the main switch for continuity.
  Refer to "CHECKING THE SWITCHES".
- Is the main switch OK?

YES → NO → Replace the main switch.

EB802412

8.Engine stop switch

- Check the engine stop switch for continuity.
  Refer to "CHECKING THE SWITCHES".
- Is the engine stop switch OK?

YES → NO → Replace the right handlebar switch.

EB802413

9.Neutral switch

- Check the neutral switch for continuity.
  Refer to "CHECKING THE SWITCHES".
- Is the neutral switch OK?

YES → NO → Replace the neutral switch.

EB802414

10.Sidestand switch

- Check the sidestand switch for continuity.
  Refer to "CHECKING THE SWITCHES".
- Is the sidestand switch OK?

YES → NO → Replace the sidestand switch.

11.Diode

- Remove the diode from the coupler.
- Connect the pocket tester (Ω × 1) to the diode terminals as shown.
- Check the diode for continuity as follows.

Tester positive probe → blue/white ① **Tester negative probe → blue/yellow ②**	**Continuity**
Tester positive probe → blue/yellow ② **Tester negative probe → blue/white ①**	**No continuity**

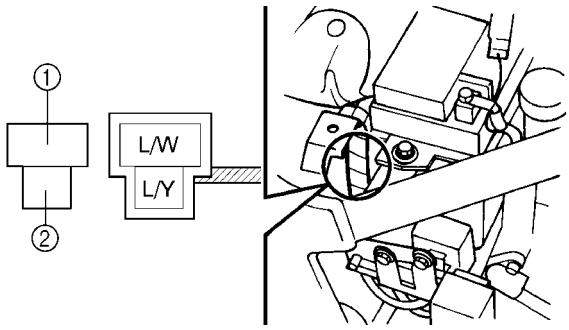

NOTE:
When you switch the tester's positive and negative probes, the readings in the above chart will be reversed.

- Are the tester readings correct?

YES → NO → Replace the diode.

EB803405

12.Clutch switch

- Check the clutch switch for continuity.
  Refer to "CHECKING THE SWITCHES".
- Is the clutch switch OK?

YES → NO → Replace the clutch switch.

EB803406

13.Start switch

- Check the start switch for continuity.
  Refer to "CHECKING THE SWITCHES".
- Is the start switch OK?

YES → NO → Replace the right handlebar switch.

FAS00754

14.Wiring

- Check the entire starting system's wiring.
  Refer to "CIRCUIT DIAGRAM".
- Is the starting system's wiring properly connected and without defects?

YES → NO → Properly connect or repair the starting system's wiring.

15.Decompression solenoid (thermistor)

- Check the decompression solenoid for continuity.
  Refer to "SELF-DIAGNOSIS".
- Is the decompression solenoid OK?

YES → Replace the ignitor unit.

NO → Replace the decompression solenoid.

EB803500

STARTER MOTOR

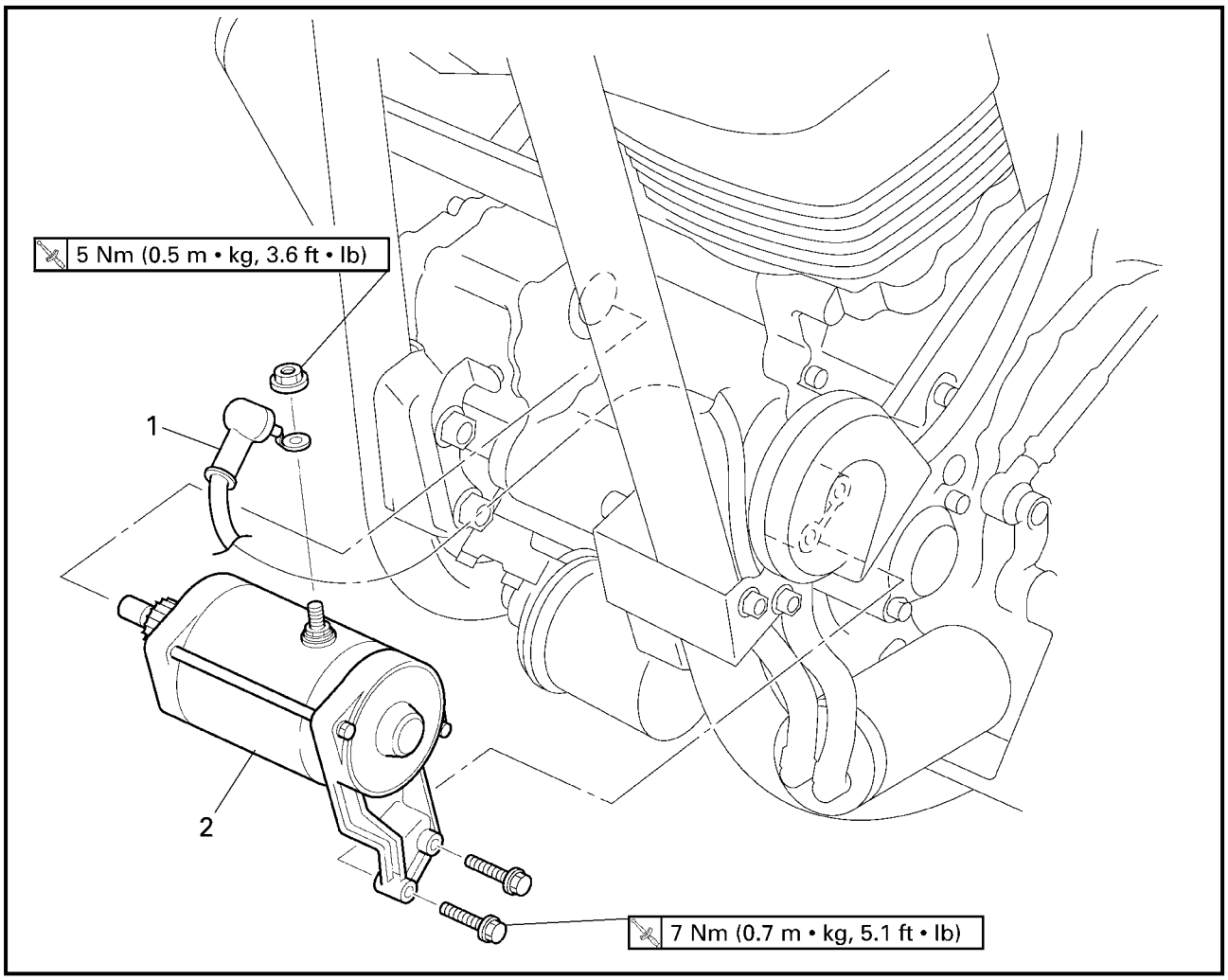

Order	Job/Part	Q'ty	Remarks
	Removing the starter motor		Remove the parts in the order listed.
1	Starter motor lead	1	
2	Starter motor assembly	1	
			For installation, reverse the removal procedure.

EB803501

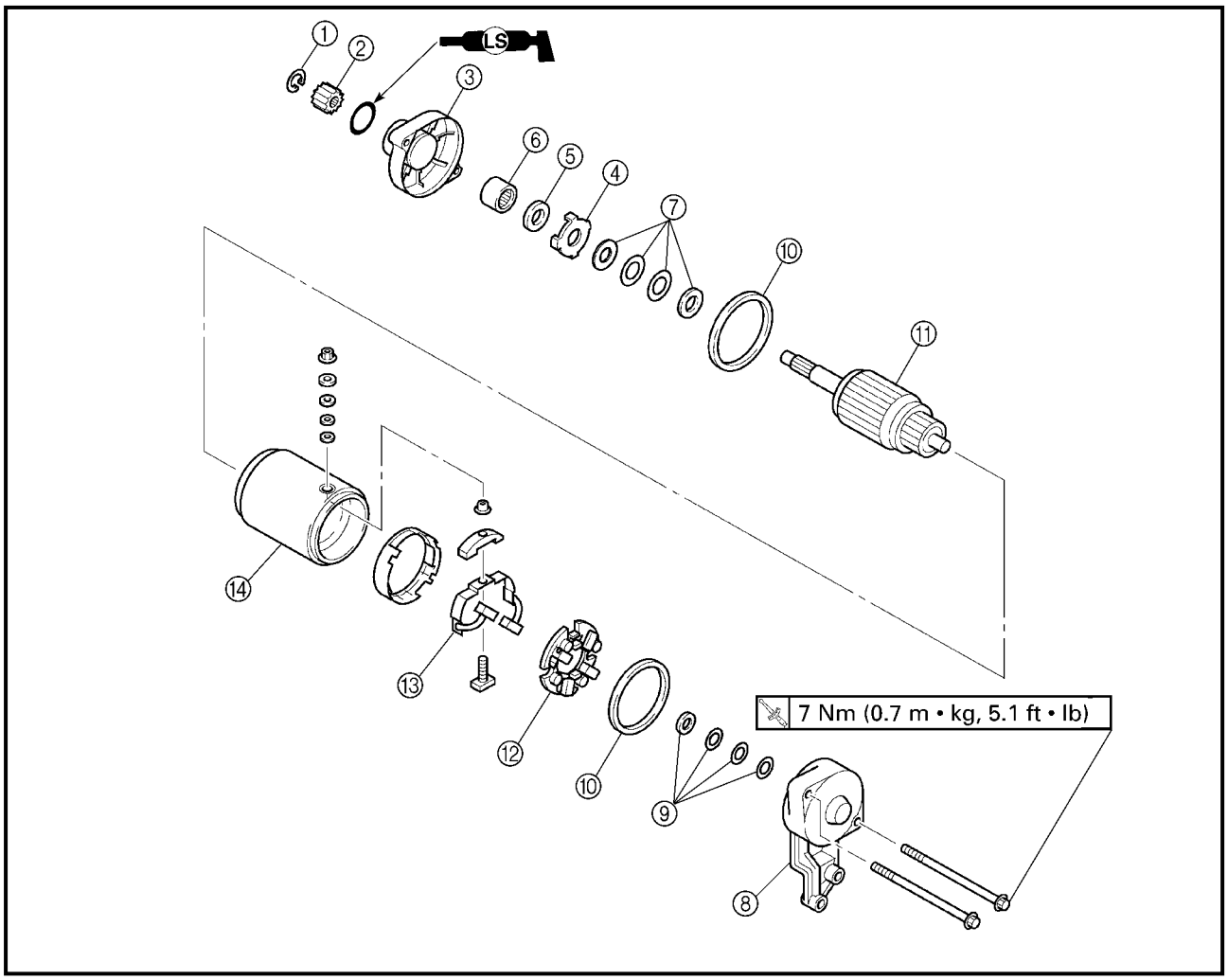

Order	Job/Part	Q'ty	Remarks
	Disassembling the starter motor		Remove the parts in the order listed.
①	Circlip	1	
②	Starter motor	1	
③	Starter motor rear cover	1	
④	Lock washer	1	
⑤	Oil seal	1	
⑥	Bearing	1	
⑦	Washer set	1	
⑧	Starter motor front cover	1	
⑨	Washer set	1	
⑩	O-ring	2	
⑪	Armature assembly	1	
⑫	Brush seat (along with the brushes)	1	
⑬	Brush holder (along with the brushes)	1	
⑭	Starter motor yoke	1	
			For assembly, reverse the disassembly procedure

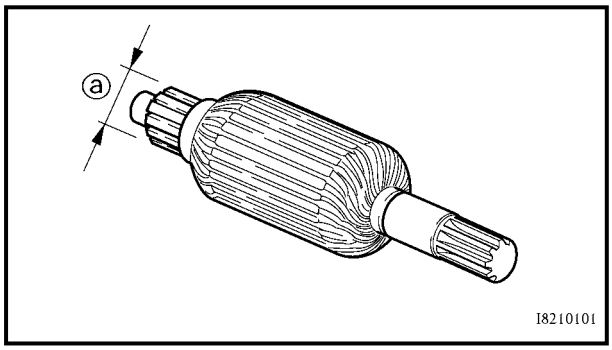

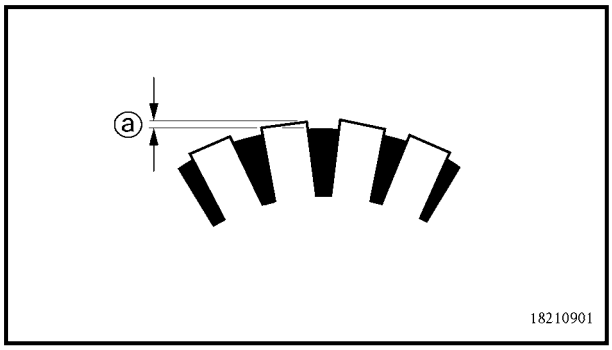

EB803511

CHECKING THE STARTER MOTOR

1. Check:
   - commutator
     Dirt → Clean with 600 grit sandpaper.
2. Measure:
   - commutator diameter ⓐ
     Out of specification → Replace the starter motor.

Minimum commutator diameter
27 mm (1.06 in)

3. Measure:
   - mica undercut ⓐ
     Out of specification → Scrape the mica to the proper measurement with a hacksaw blade which has been grounded to fit the commutator.

Mica undercut
0.7 mm (0.03 in)

NOTE:
The mica must be undercut to ensure proper operation of the commutator.

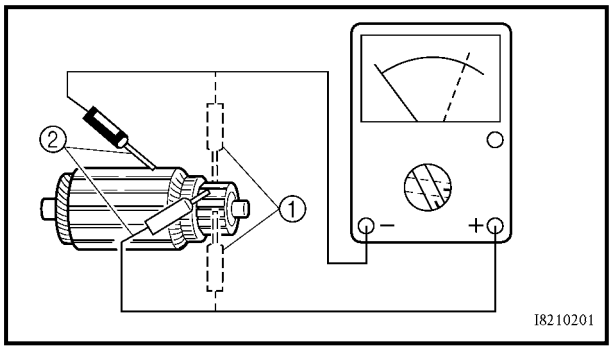

4. Measure:
   - armature assembly resistances (commutator and insulation)
     Out of specification → Replace the starter motor.

▼▼▼▼▼▼▼▼▼▼▼▼▼▼▼▼▼▼▼▼▼▼▼▼▼▼▼▼▼▼▼▼

a. Measure the armature assembly resistances with the pocket tester.

Pocket tester
YU-03112

Armature assembly
Commutator resistance ①
0.025 ~ 0.035 Ω at 20 °C (68 °F)
Insulation resistance ②
Above 1 MΩ at 20 °C (68 °F)

b. If any resistance is out of specification, replace the starter motor.

▲▲▲▲▲▲▲▲▲▲▲▲▲▲▲▲▲▲▲▲▲▲▲▲▲▲▲▲▲▲▲▲

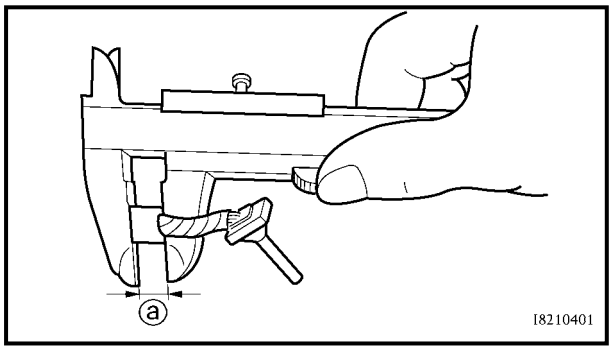

5. Measure:
   - brush length ⓐ
     Out of specification → Replace the brushes as a set.

Minimum brush length
5 mm (0.20 in)

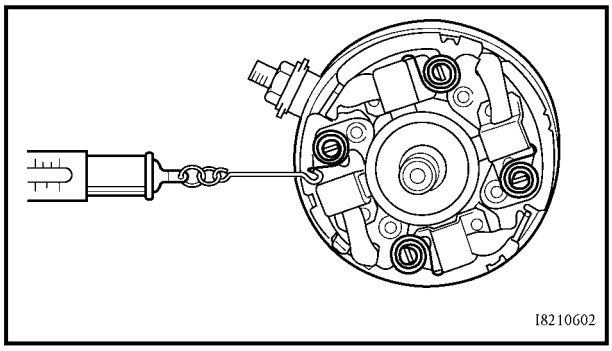

6. Measure:
   - brush spring force
     Out of specification → Replace the brush springs as a set.

Brush spring force
7.65 ~ 10.01 N
(765 ~ 1,001 gf, 27.0 ~ 35.3 oz)

7. Check:
   - gear teeth
     Damage/wear → Replace the gear.
8. Check:
   - bearing
   - oil seal
     Damage/wear → Replace the defective part(s).

EB803701
ASSEMBLING THE STARTER MOTOR

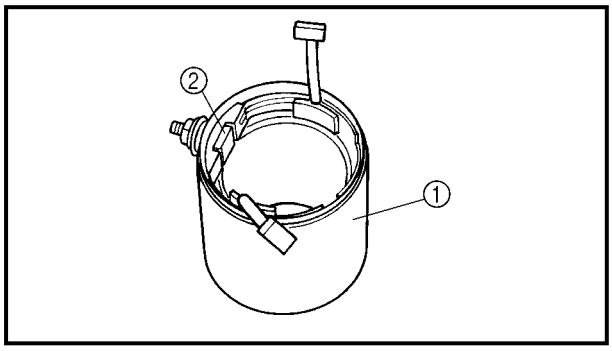

1. Install:
   - starter motor yoke ①
   - bush holder ②

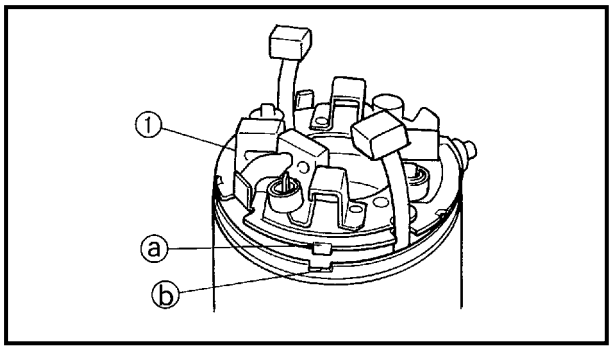

2. Install:
   - brush seat ①

NOTE:
Align the tab ⓐ on the brush seat with the slot ⓑ in the starter motor rear cover.

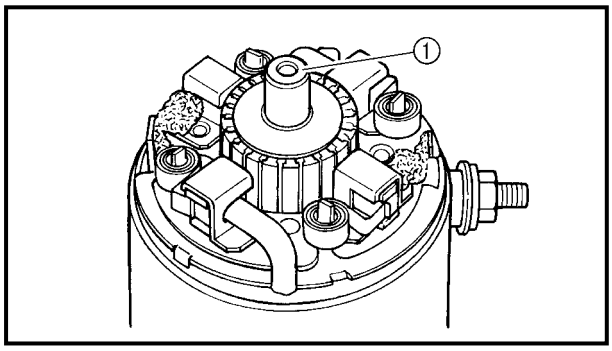

3. Install:
   - armature assembly

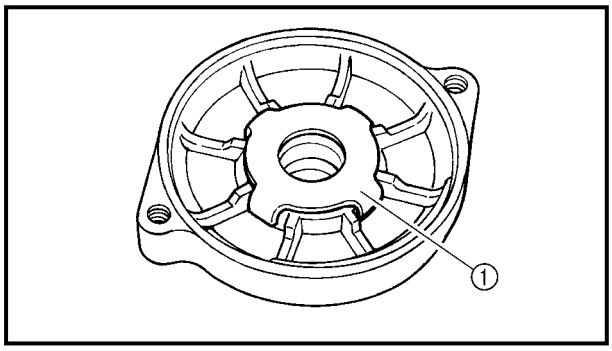

4. Install:
   - bearing
   - oil seal
   - lock washer ①

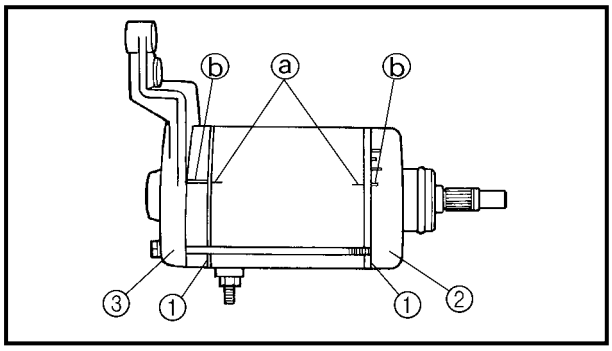

5. Install:
   - O-rings ① New
   - starter motor rear cover ②
   - starter motor front cover ③
   - bolts 7 Nm (0.7 m · kg, 5.1 ft · lb)

NOTE:
Align the match marks ⓐ on the starter motor yoke with the match marks ⓑ on the front and rear covers.

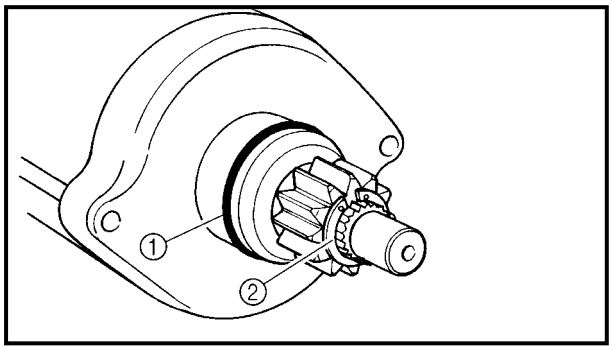

6. Install:
   - starter motor gear ①
   - circlip ②

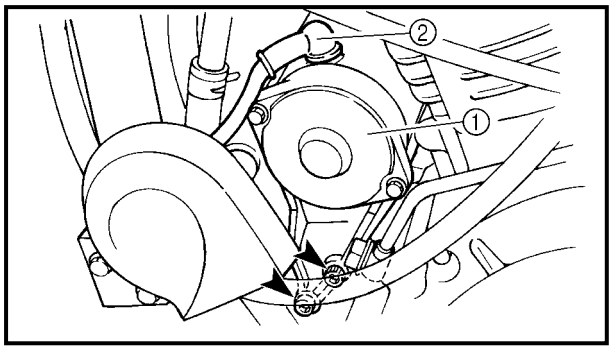

INSTALLING THE STARTER MOTOR

1. Install:
   - starter motor ①

   7 Nm (0.7 m · kg, 5.1 ft · lb)

2. Connect:
   - starter lead ②

   5 Nm (0.5 m · kg, 3.6 ft · lb)

EB804000

CHARGING SYSTEM

CIRCUIT DIAGRAM

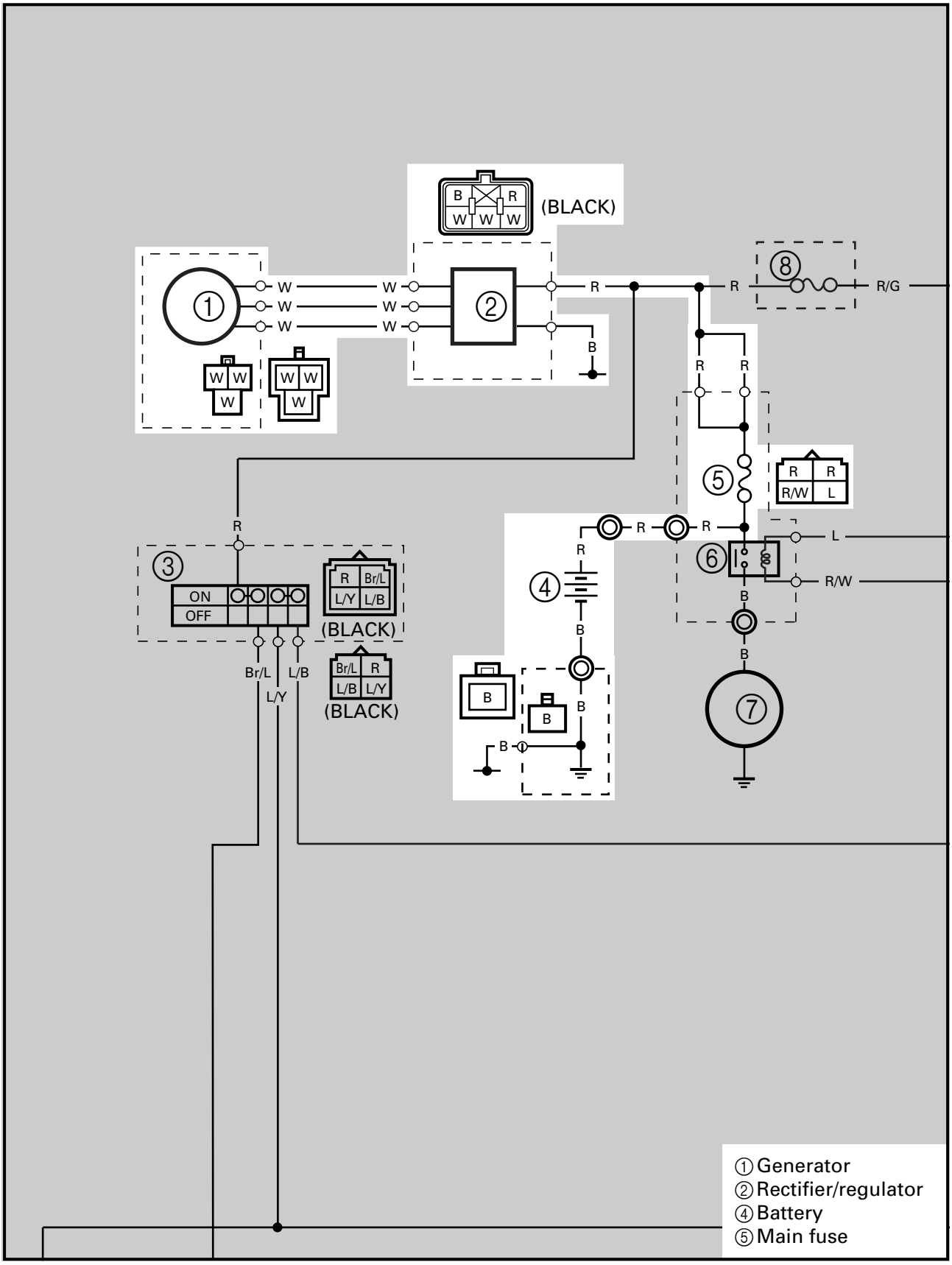

EB804010
TROUBLESHOOTING

The battery is not being charged.

Check:
1. main fuse
2. battery
3. charging voltage
4. stator coil assembly resistance
5. wiring
   (of the entire charging system)

NOTE:
- Before troubleshooting, remove the following part(s):
1) rider seat
2) left side cover
- Troubleshoot with the following special tool(s).

Inductive tachometer
YU-8036-A
Pocket tester
YU-03112

EB802400
1.Main fuse

- Check the main fuse for continuity.
  Refer to "CHECKING THE FUSES" in chapter 3.
- Is the main fuse OK?

YES → NO → Replace the fuse.

EB802401
2.Battery

- Check the condition of the battery.
  Refer to "CHECKING AND CHARGING THE BATTERY" in chapter 3.

Open-circuit voltage
12.8 V or more at 20 °C (68 °F)

- Is the battery OK?

YES → NO →
- Clean the battery terminals.
- Recharge or replace the battery.

EB804400
3.Charging voltage

- Connect the inductive tachometer to the spark plug lead of cylinder #1.
- Connect the pocket tester (DC 20V) to the battery as shown.

Tester positive probe →
battery positive terminal
Tester negative probe →
battery negative terminal

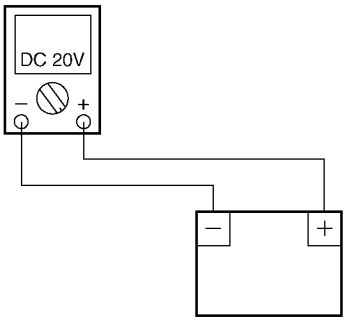

- Start the engine and let it run at approximately 5,000 r/min.
- Measure the charging voltage.

Charging voltage
14 V at 5,000 r/min

NOTE:
Make sure that the battery is fully charged.

- Is the charging voltage within specification?

NO → YES

The charging circuit is OK.

EB804401

4.Stator coil assembly resistances

- Disconnect the generator coupler from the wire harness.
- Connect the pocket tester (Ω × 1) to the stator coil assembly coupler as shown.

Tester positive probe → white ①
Tester negative probe → white ②

Tester positive probe → white ①
Tester negative probe → white ③

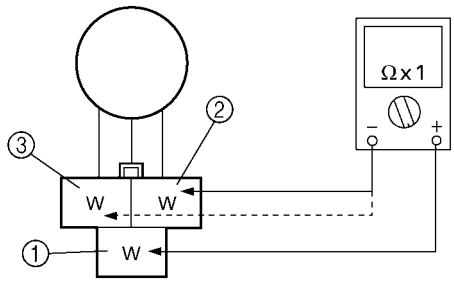

- Measure the stator coil assembly resistances.

Stator coil resistance
0.45 ~ 0.55 Ω at 20 ˚C (68 ˚F)

- Is the stator coil assembly OK?

YES → Replace the stator coil assembly.

NO → Replace the stator coil assembly.

EB804404

5.Wiring

- Check the wiring connections of the entire charging system.
  Refer to "CIRCUIT DIAGRAM".
- Is the charging system's wiring properly connected and without defects?

YES → Replace the rectifier/regulator.

NO → Properly connect or repair the charging system's wiring.

7

EB805000

LIGHTING SYSTEM

CIRCUIT DIAGRAM

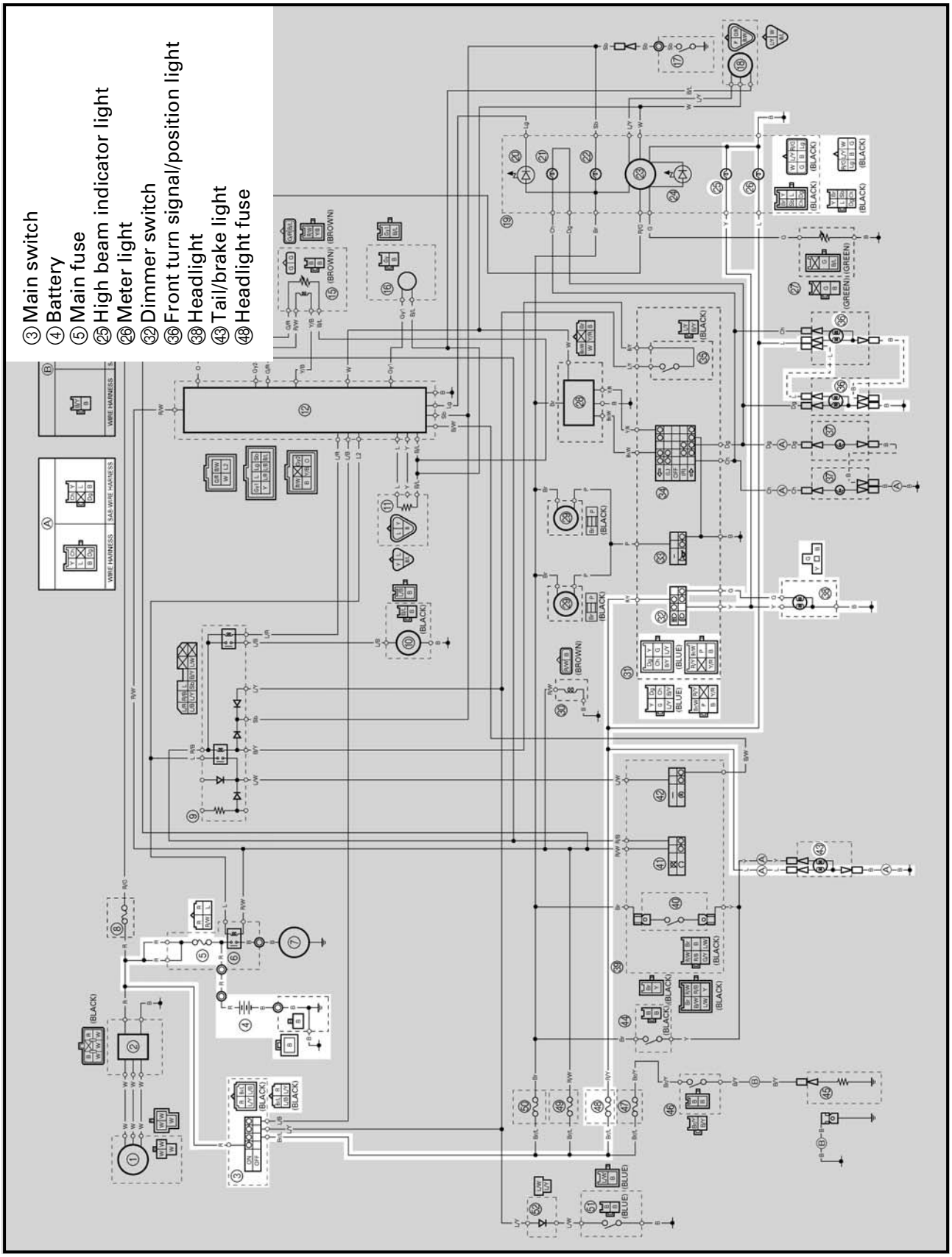

EB805010
TROUBLESHOOTING

Any of the following fail to light: headlight, high beam indicator light, taillight, position light or meter light.

Check:
1. main, and headlight fuses
2. battery
3. main switch
4. dimmer switch
5. wiring
   (of the entire charging system)

NOTE:
- Before troubleshooting, remove the following part(s):
1) rider seat
2) fuel tank
3) left side cover
4) headlight lens unit
- Troubleshoot with the following special tool(s).

Pocket tester
YU-03112

EB802400

1.Main and headlight fuses

- Check the main and headlight fuses for continuity.
  Refer to "CHECKING THE FUSES" in chapter 3.
- Are the main and headlight fuses OK?

YES → NO → Replace the fuse(s).

EB802401

2.Battery

- Check the condition of the battery.
  Refer to "CHECKING AND CHARGING THE BATTERY" in chapter 3.

Open-circuit voltage
12.8 V or more at 20 ˚C (68 ˚F)

- Is the battery OK?

YES → NO →
- Clean the battery terminals.
- Recharge or replace the battery.

EB802411

3.Main switch

- Check the main switch for continuity.
  Refer to "CHECKING THE SWITCHES".
- Is the main switch OK?

YES → NO → Replace the main switch.

EB805401

4.Dimmer switch

- Check the dimmer switch for continuity.
  Refer to "CHECKING THE SWITCHES".
- Is the dimmer switch OK?

YES → NO → Replace the left handlebar switch.

EB805404

5.Wiring

- Check the entire lighting system's wiring.
  Refer to "CIRCUIT DIAGRAM".
- Is the lighting system's wiring properly connected and without defects?

YES → Check the condition of each of the lighting system's circuits.
Refer to "CHECKING THE LIGHTING SYSTEM".

NO → Properly connect or repair the lighting system's wiring.

EB805410

CHECKING THE LIGHTING SYSTEM

1. The headlight and the high beam indicator light fail to come on.

1.Headlight bulb and socket

- Check the headlight bulb and socket for continuity.
  Refer to "CHECKING THE BULBS AND BULB SOCKETS".
- Is the headlight bulb and socket OK?

YES →

NO → Replace the headlight bulb, socket or both.

2.High beam indicator light bulb and socket

- Check the high beam indicator light bulb and socket for continuity.
  Refer to "CHECKING THE BULBS AND BULB SOCKETS".
- Is the high beam indicator light bulb and socket OK?

YES →

NO → Replace the high beam indicator light bulb, socket or both.

3.Voltage

- Connect the pocket tester (DC 20 V) to the headlight coupler and the meter assembly couplers as shown.

A When the dimmer switch is set to "
B When the dimmer switch is set to "

Headlight coupler

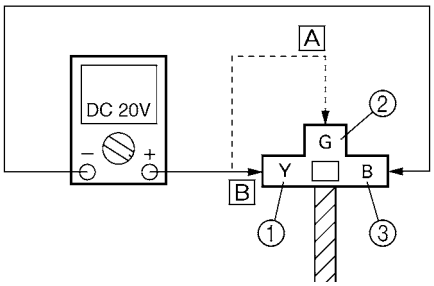

Headlight
Tester positive probe → yellow ① or green ②
Tester negative probe → black ③
High beam indicator light
Tester positive probe → yellow ④
Tester negative probe → black ⑤

Meter assembly coupler (wire harness side)

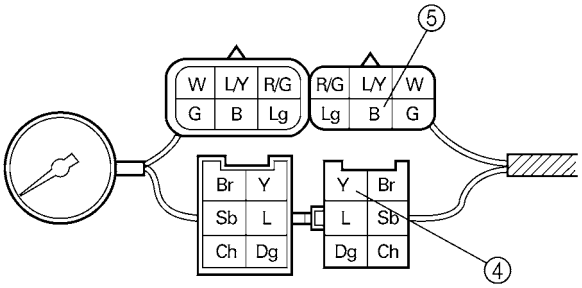

- Set the main switch to "ON".
- Set the dimmer switch to "≣D" or "≣D".
- Measure the voltage (12 V) of yellow (green) ② on the headlight coupler and yellow ④ on the meter assembly coupler.
- Is the voltage within specification?

YES → NO

The wiring circuit from the main switch to the headlight coupler and meter assembly couplers are faulty and must be repaired.

EB805411

2. A meter light fails to come on.

1.Meter light bulb and socket

- Check the meter light bulb and socket for continuity.
  Refer to "CHECKING THE BULBS AND BULB SOCKETS".
- Are the meter light bulb and socket OK?

YES → NO

Replace the meter light bulb, socket or both.

2.Voltage

- Connect the pocket tester (20 V) to the meter assembly coupler (wire harness side) as shown.

Tester positive probe → blue ①
Tester negative probe → black ②

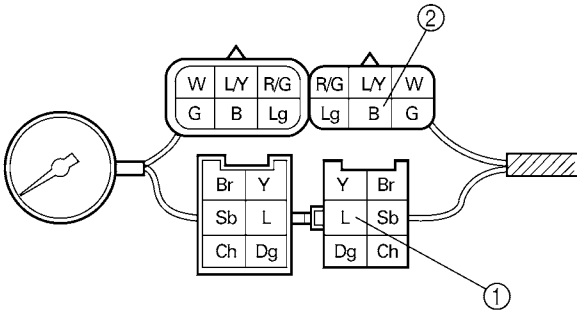

- Set the main switch to "ON".
- Measure the voltage (12 V) of blue ① on the meter assembly coupler (wire harness side).
- Is the voltage within specification?

YES → NO

This circuit is OK.

The wiring circuit from the main switch to the meter assembly coupler is faulty and must be repaired.

EB805412

3. A tail/brake light fails to come on.

1.Tail/brake light bulb and socket

- Check the tail/brake light bulb and socket for continuity.
  Refer to "CHECKING THE BULBS AND BULB SOCKETS".
- Are the tail/brake light bulb and socket OK?

YES

NO

Replace the tail/brake light bulb, socket or both.

2.Voltage

- Connect the pocket tester (DC 20 V) to the tail/brake light connectors (wire harness side) as shown.

Tester positive probe → blue ①
Tester negative probe → black ②

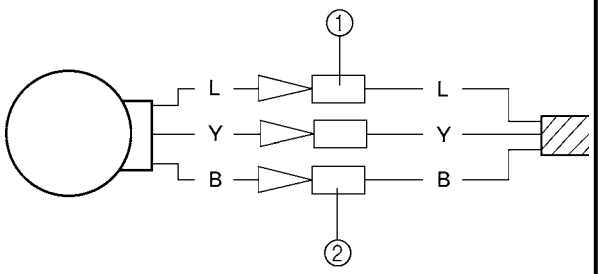

- Set the main switch to "ON".
- Measure the voltage (12 V) of blue ① on the tail/brake light coupler (wire harness side).
- Is the voltage within specification?

YES

This circuit is OK.

NO

The wiring circuit from the main switch to the tail/brake light coupler is faulty and must be repaired.

4. The front turn signal/position light fails to come on.

1.Front turn signal/position light bulb and socket

- Check the front turn signal/position light bulb and socket for continuity.
  Refer to "CHECKING THE BULBS AND BULB SOCKETS".
- Are the front turn signal/position light bulb and socket OK?

YES

NO

Replace the front turn signal/position light bulb, socket or both.

2.Voltage

- Connect the pocket tester (DC 20 V) to the front turn signal/position light connectors (wire harness side) as shown.

Tester positive probe → blue ①
Tester negative probe → black ②

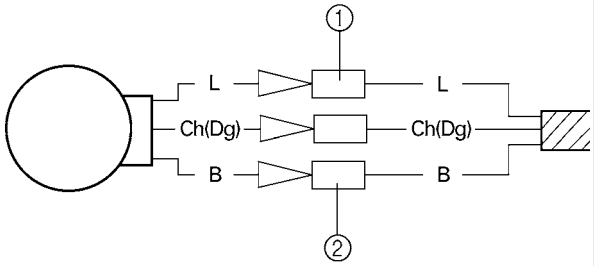

- Set the main switch to "ON".
- Measure the voltage (12 V) of blue ① on the front turn signal/position light connectors (wire harness side).
- Is the voltage within specification?

YES

This circuit is OK.

NO

The wiring circuit from the main switch to the front turn signal/position light connectors is faulty and must be repaired.

7

EB806000

SIGNALING SYSTEM

CIRCUIT DIAGRAM

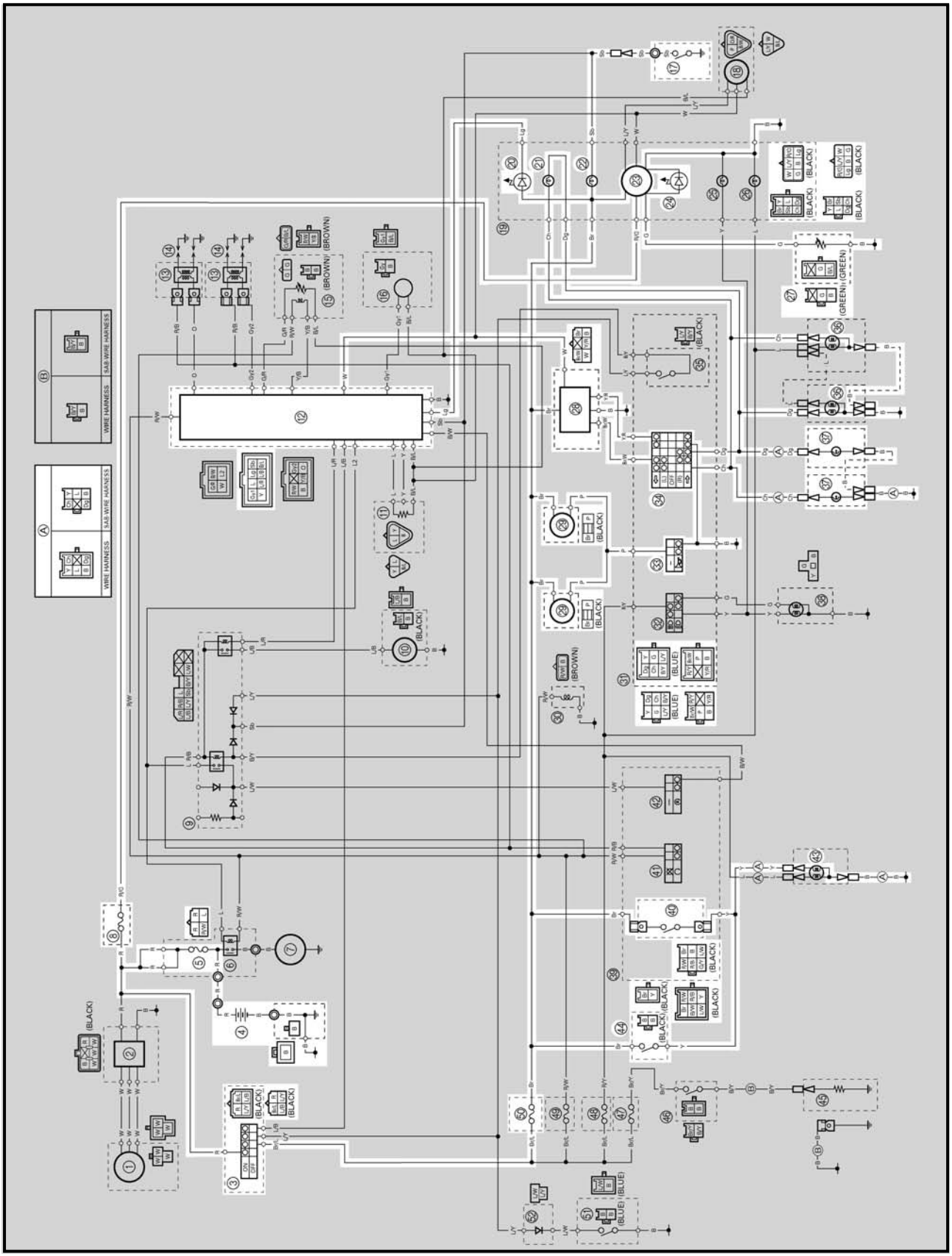

③ Main switch
④ Battery
⑤ Main fuse
⑧ Backup fuse
⑫ Ignitor unit
⑰ Neutral switch
⑳ Engine trouble indicator light
㉑ Turn signal indicator light
㉒ Neutral indicator light
㉓ Speedometer assembly (speedometer, combination meter and fuel level meter)
㉔ Fuel level indicator light
㉗ Fuel sender
㉘ Turn signal relay
㉙ Horn
㉝ Horn switch
㉞ Turn signal switch
㊱ Front turn signal/position light
㊲ Rear turn signal light
㊵ Front brake light switch
㊸ Tail/brake light
㊹ Rear brake light switch
㊿ Signaling system fuse

EB806010
TROUBLESHOOTING

- **Any of the following fail to light: turn signal light, brake light or an indicator light.**
- **The horn fails to sound.**

Check:
1. main, signaling system and backup fuses
2. battery
3. main switch
4. wiring
   (of the entire signaling system)

NOTE:
- Before troubleshooting, remove the following part(s):
1) rider seat
2) fuel tank
3) side covers
4) headlight lens unit
- Troubleshoot with the following special tool(s).

Pocket tester
YU-03112

EB802400

1.Main, signaling system and backup fuses

- Check the main, signaling system and backup fuses for continuity.
  Refer to "CHECKING AND CHARGING THE FUSES" in chapter 3.
- Are the main, signaling system and backup fuses OK?

YES → NO → Replace the fuse(s).

EB802401

2.Battery

- Check the condition of the battery.
  Refer to "CHECKING THE BATTERY" in chapter 3.

Open-circuit voltage
12.8 V or more at 20 ˚C (68 ˚F)

- Is the battery OK?

YES → NO →
- Clean the battery terminals.
- Recharge or replace the battery.

EB802411

3.Main switch

- Check the main switch for continuity.
  Refer to "CHECKING THE SWITCHES".
- Is the main switch OK?

YES → NO → Replace the main switch.

EB806400

4.Wiring

- Check the entire signaling system's wiring.
  Refer to "CIRCUIT DIAGRAM".
- Is the signaling system's wiring properly connected and without defects?

YES → Check the condition of each of the signaling system's circuits.
Refer to "CHECKING THE SIGNALING SYSTEM".

NO → Properly connect or repair the signaling system's wiring.

7

EB806410

CHECKING THE SIGNALING SYSTEM

1.The horn fails to sound.

1.Horn switch

- Check the horn switch for continuity. Refer to "CHECKING THE SWITCHES".
- Is the horn switch OK?

YES ⇩ NO ⇩

Replace the left handlebar switch.

2.Voltage

- Connect the pocket tester (DC 20 V) to the horn coupler as shown.

Tester positive probe → brown ①
Tester negative probe → ground

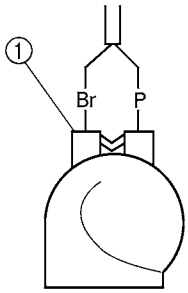

- Set the main switch to "ON".
- Push the horn switch.
- Measure the voltage (12 V) of brown on the horn coupler.
- Is the voltage within specification?

YES ⇩ NO ⇩

The wiring circuit from the main switch to the horn connector is faulty and must be repaired.

3.Horn

- Disconnect the horn coupler at the horn.
- Connect a jumper lead ① to the brown terminal in the horn coupler and the horn terminal.
- Connect a jumper lead ② to the horn terminal and ground the jumper lead.
- Set the main switch to "ON".
- Push the horn switch.
- Does the horn sound?

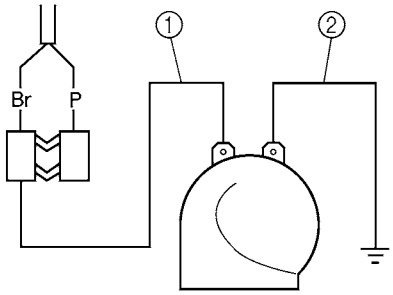

NO ⇩ YES ⇩

The horn is OK.

4.Voltage

- Connect the pocket tester (DC 20 V) to the horn coupler as shown.

Tester positive probe → pink ①
Tester negative probe → ground

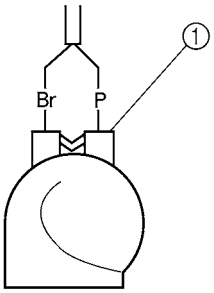

- Set the main switch to "ON".
- Measure the voltage (12 V) of pink ① on the horn coupler.
- Is the voltage within specification?

YES ⇩ NO ⇩

Repair or replace the horn.

Replace the horn.

EB806411

2. A tail/brake light fails to come on.

1.Tail/brake light bulb and socket

- Check the tail/brake light bulb and socket for continuity.
  Refer to "CHECKING THE BULBS AND BULB SOCKETS".
- Are the tail/brake light bulb and socket OK?

YES →

NO → Replace the tail/brake light bulb, socket or both.

2.Brake light switches

- Check the brake light switches for continuity.
  Refer to "CHECKING THE SWITCHES".
- Is the brake light switch OK?

YES →

NO → Replace the brake light switch.

3.Voltage

- Connect the pocket tester (DC 20 V) to the tail/brake light coupler (wire harness side) as shown.

Tester positive probe → yellow ①
Tester negative probe → black ②

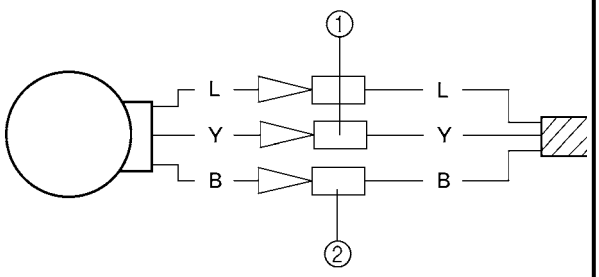

- Set the main switch to "ON".
- Pull in the brake lever or push down on the brake pedal.
- Measure the voltage (12 V) of yellow at the tail/brake light coupler (wire harness side).
- Is the voltage within specification?

YES → This circuit is OK.

NO → The wiring circuit from the main switch to the tail/brake light coupler is faulty and must be repaired.

EB806413

3. A turn signal light, turn signal indicator light or both fail to blink.

1.Turn signal light bulb and socket

- Check the turn signal light bulb and socket for continuity.
  Refer to "CHECKING THE BULBS AND BULB SOCKETS".
- Are the turn signal light bulb and socket OK?

YES →

NO → Replace the turn signal light bulb, socket or both.

2.Turn signal indicator light bulb and socket

- Check the turn signal indicator light bulb and socket for continuity.
  Refer to "CHECKING THE BULBS AND BULB SOCKETS".
- Is the turn signal indicator light bulb and socket OK?

YES →

NO → Replace the turn signal indicator light bulb, socket or both.

3.Turn signal switch

- Check the turn signal switch for continuity.
  Refer to "CHECKING THE SWITCHES".
- Is the turn signal switch OK?

YES → 4.Voltage

NO → Replace the left handlebar switch.

4.Voltage

- Connect the pocket tester (DC 20 V) to the turn signal relay coupler as shown.

Tester positive probe → brown ①
Tester negative probe → ground

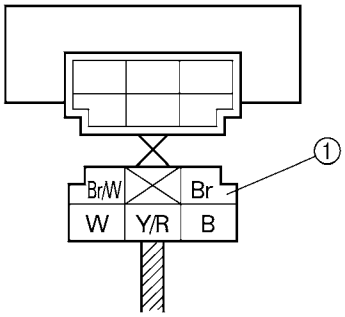

- Set the main switch to "ON".
- Measure the voltage (12 V) of brown ① at the turn signal relay coupler.
- Is the voltage within specification?

YES → 5.Voltage

NO → The wiring circuit from the main switch to the turn signal relay coupler is faulty and must be repaired.

5.Voltage

- Connect the pocket tester (DC 20 V) to the turn signal relay coupler as shown.

Tester positive probe → brown/white ①
Tester negative probe → ground

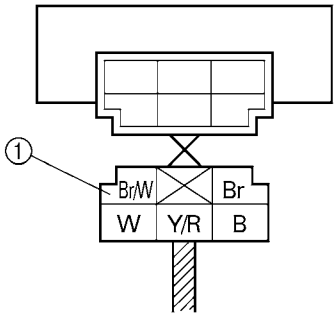

- Set the main switch to "ON".
- Set the turn signal switch to "⇦" or "⇨".
- Measure the voltage (12 V) of brown/white at the turn signal relay coupler.
- Is the voltage within specification?

YES → NO → The turn signal relay is faulty and must be replaced.

6.Voltage

- Connect the pocket tester (DC 20 V) to the turn signal light connectors (wire harness side) or the meter assembly coupler as shown.

A Turn signal light
B Turn signal indicator light

Left turn signal light
Tester positive probe → chocolate ①
Tester negative probe → ground
Right turn signal light
Tester positive probe → dark green ②
Tester negative probe → ground

A

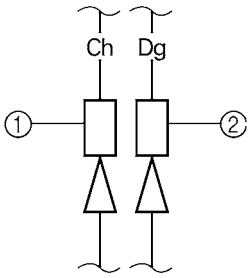

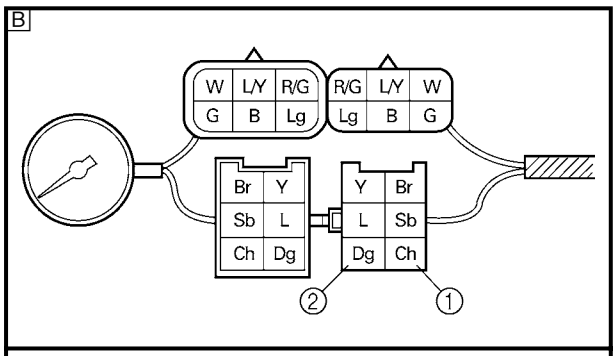

- Set the main switch to "ON".
- Set the turn signal switch to "⇦" or "⇨".
- Measure the voltage (12 V) of chocolate ① or dark green ② at the turn signal light connectors (wire harness side) or the meter assembly coupler.
- Is the voltage within specification?

YES → This circuit is OK.

NO → The wiring circuit from the turn signal switch to the turn signal light connector or the meter assembly coupler are faulty and must be repaired.

EB806414

4. The neutral indicator light fails to come on.

1.Neutral indicator light bulb and socket

- Check the neutral indicator light bulb and socket for continuity.
  Refer to "CHECKING THE BULBS AND BULB SOCKETS".
- Are the neutral indicator light bulb and socket OK?

YES

NO → Replace the neutral indicator light bulb, socket or both.

2.Neutral switch

- Check the neutral switch for continuity.
  Refer to "CHECKING THE SWITCHES".
- Is the neutral switch OK?

YES

NO → Replace the neutral switch.

3.Voltage

- Connect the pocket tester (DC 20 V) to the meter assembly coupler as shown.

Tester positive probe → brown ①
Tester negative probe → sky blue ②

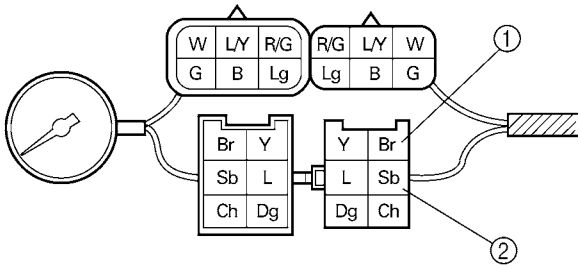

- Set the main switch to "ON".
- Measure the voltage (12 V) of brown ① and sky blue ② at the meter assembly coupler.
- Is the voltage within specification?

YES → This circuit is OK.

NO → The wiring circuit from the main switch to the meter assembly coupler is faulty and must be repaired.

EB806417

5. The fuel level indicator light, fuel level meter or both fail to come on.

1.Fuel level indicator light LED

- Check the LED of the fuel level indicator light.
  Refer to "CHECKING THE BULBS AND BULB SOCKETS".
- Is the fuel level indicator light LED OK?

YES ⇩ NO ⇩

Replace the meter assembly.

2.Fuel sender

- Disconnect the fuel sender coupler from the wire harness.
- Drain the fuel from the fuel tank and remove the fuel sender from the fuel tank.
- Connect the pocket tester (Ω × 10) to the fuel sender coupler.

Tester positive probe → green ①
Tester negative probe → black/blue ②

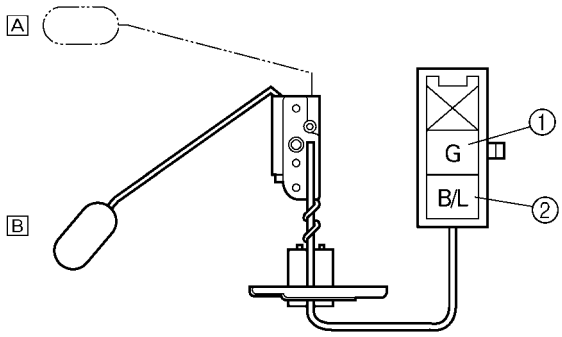

- Measure the fuel sender resistance.

Fuel sender resistance
Full position of the float A
11 ~ 13 Ω at 20 °C (68 °F)
Empty position of the float B
140 ~ 143 Ω at 20 °C (68 °F)

- Is the fuel sender OK?

YES ⇩ NO ⇩

Replace the fuel sender.

3.Voltage

- Connect the pocket tester (DC 20 V) to the meter assembly coupler (wire harness side) as shown.

Tester positive probe → brown ①
Tester negative probe → black ②

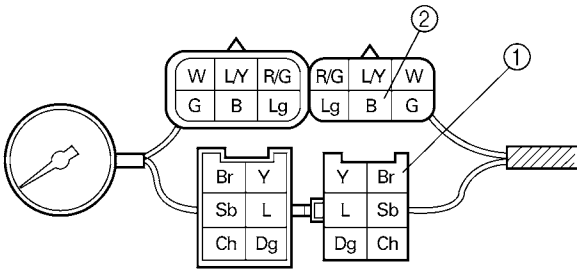

- Set the main switch to "ON".
- Measure the voltage (12 V).
- Is the voltage within specification?

YES ⇩ NO ⇩

Replace the meter assembly.

The wiring circuit from the main switch to the meter assembly coupler is faulty and must be repaired.

6. An engine trouble indicator light fails to come on.

1.Engine trouble indicator LED

- Check the LED of the engine indicator light.
  Refer to "CHECKING THE BULBS AND BULB SOCKETS".

YES ⇩ NO ⇩

Replace the meter assembly.

EAS00843

2.Wire harness
• Check the wire harness for continuity. Refer to “CIRCUIT DIAGRAM”. • Is the wire harness OK?

YES	NO
Replace the ignitor unit.	Repair or replace the wire harness.

EB808000

FUEL PUMP SYSTEM

CIRCUIT DIAGRAM

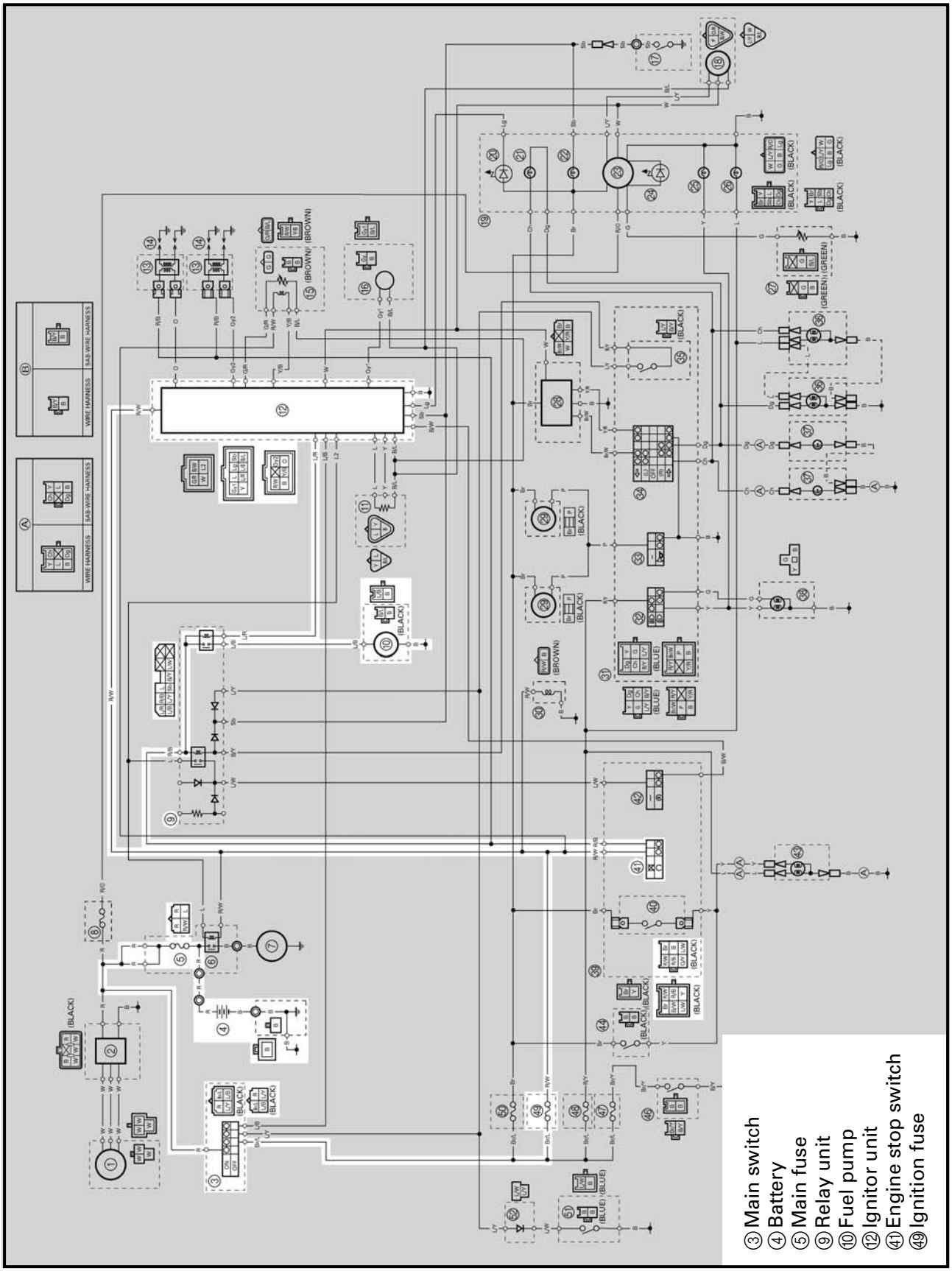

EB808010

FUEL PUMP CIRCUIT OPERATION

The ignitor unit includes the control unit for the fuel pump.

① Battery
② Main fuse
③ Main switch
④ Ignition fuse
⑤ Engine stop switch
⑥ Ignitor unit
⑦ Fuel pump relay
⑧ Fuel pump

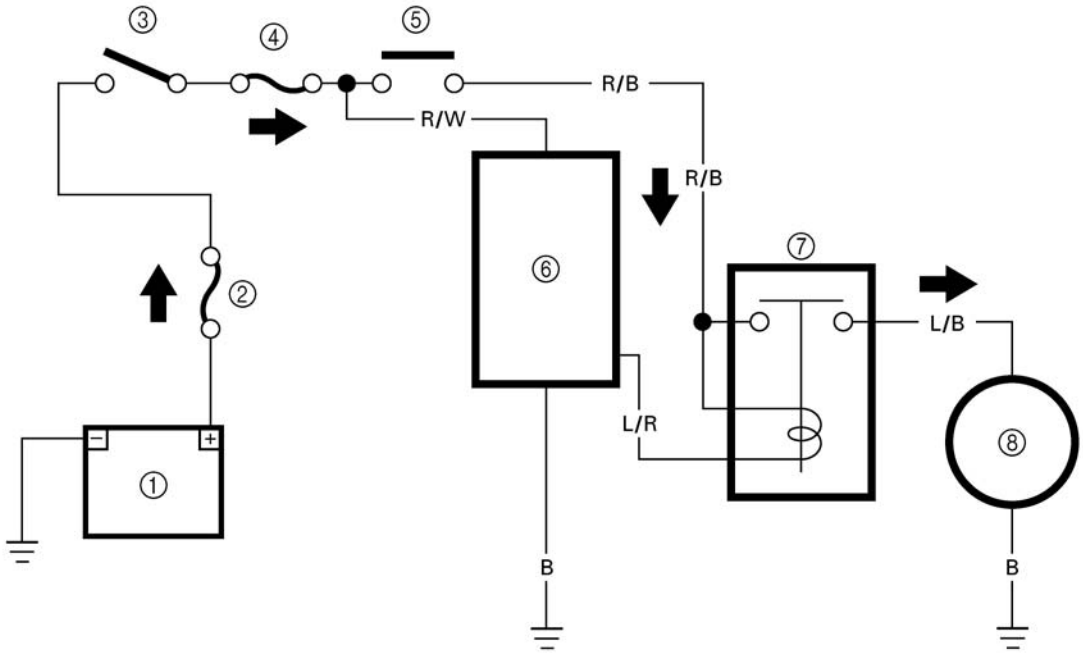

EB808020
TROUBLESHOOTING

The fuel pump fails to operate.

Check:
1. main and ignition fuses
2. battery
3. main switch
4. engine stop switch
5. relay unit (fuel pump relay)
6. fuel pump
7. wiring
   (the entire fuel pump system)

NOTE:
- Before troubleshooting, remove the following part(s):
1) rider seat
2) fuel tank
3) side covers
4) headlight lens unit
- Troubleshoot with the following special tool(s).

Pocket tester
YU-03112

EAS00738
1.Main and ignition fuses
- Check the main and ignition fuses for continuity.
  Refer to "CHECKING THE FUSES" in chapter 3.
- Are the main and ignition fuses OK?

YES → NO → Replace the fuse(s).

EAS00739
2.Battery
- Check the condition of the battery.
  Refer to "CHECKING AND CHARGING THE BATTERY" in chapter 3.

Minimum open circuit voltage
12.8 V or more at 20 °C (68 °F)

- Is the battery OK?

YES → NO →
- Clean the battery terminals.
- Recharge or replace the battery.

EAS00749
3.Main switch
- Check the main switch for continuity.
  Refer to "CHECKING THE SWITCHES".
- Is the main switch OK?

YES → NO → Replace the main switch.

EAS00750
4.Engine stop switch
- Check the engine stop switch for continuity.
  Refer to "CHECKING THE SWITCHES".
- Is the engine stop switch OK?

YES → NO → Replace the right handlebar switch.

5.Relay unit (fuel pump relay)

- Disconnect the relay unit from the coupler.
- Connect the pocket tester (Ω × 1) and battery (12 V) to the relay unit terminals as shown.

Battery positive terminal → red/black ①
Battery negative terminal → blue/red ②

Tester positive probe → red/black ①
Tester negative probe → blue/black ③

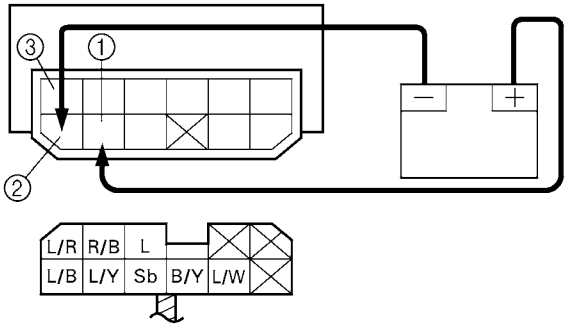

- Does the fuel pump relay have continuity between red/black and blue/black?

YES → NO

Replace the relay unit.

EB808400

6.Fuel pump resistance

- Disconnect the fuel pump coupler from the wire harness.
- Connect the pocket tester (Ω × 1) to the fuel pump coupler (fuel pump side) as shown.

Tester positive probe → black/blue ①
Tester negative probe → black ②

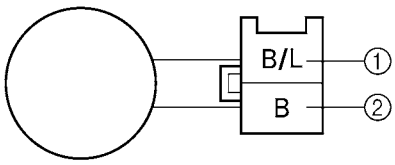

- Measure the fuel pump resistance.

Fuel pump resistance
1.6 ~ 2.2 Ω at 20 ˚C (68 ˚F)

- Is the fuel pump OK?

YES → NO

Replace the fuel pump.

EAS00754

7.Wiring

- Check the entire fuel pump system's wiring.
  Refer to "CIRCUIT DIAGRAM".
- Is the fuel pump system's wiring properly connected and without defects?

YES → NO

Replace the ignitor unit.

Properly connect or repair the fuel pump system's wiring.

EB808410

CHECKING THE FUEL PUMP

⚠ WARNING

Gasoline is extremely flammable and under certain circumstances there can be a danger of an explosion or fire. Be extremely careful and note the following points:

- **Stop the engine before refuelling.**
- **Do not smoke and keep away from open flames, sparks or any other source of fire.**
- **If you do accidentally spill gasoline, wipe it up immediately with dry rags.**
- **If gasoline touches the engine when it is hot, a fire may occur. Therefore, make sure that the engine is completely cool before performing the following test.**

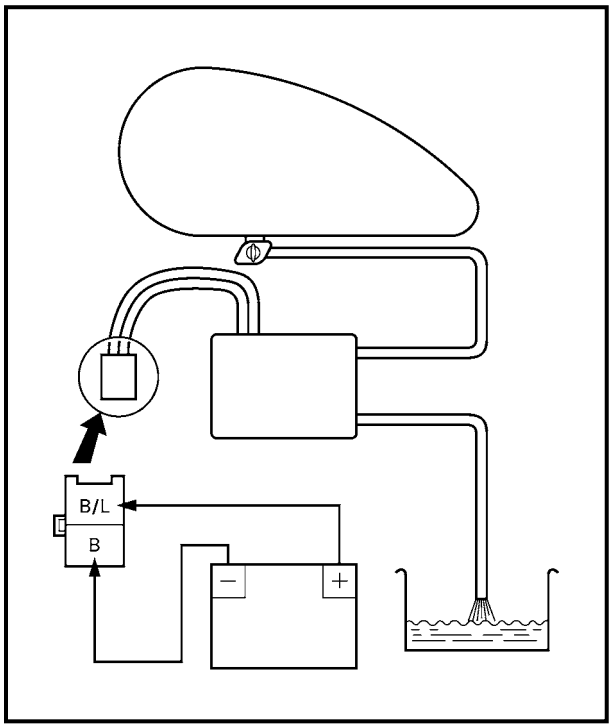

1.Check:
- fuel pump operation

▼▼▼▼▼▼▼▼▼▼▼▼▼▼▼▼▼▼▼▼▼▼▼▼▼▼▼▼▼▼

a. Fill the fuel tank.

b. Put the end of the fuel hose into an open container.

c. Turn the fuel cock to “ON” or “RES”.

d. Connect the battery (12 V) to the fuel pump coupler as shown.

Battery positive lead → black/blue ①
Battery negative lead → black ②

e. If fuel flows out of the fuel hose, the fuel pump is OK. If fuel does not flow, replace the fuel pump.

▲▲▲▲▲▲▲▲▲▲▲▲▲▲▲▲▲▲▲▲▲▲▲▲▲▲▲▲▲▲

EAS00820

CARBURETOR HEATING SYSTEM

CIRCUIT DIAGRAM

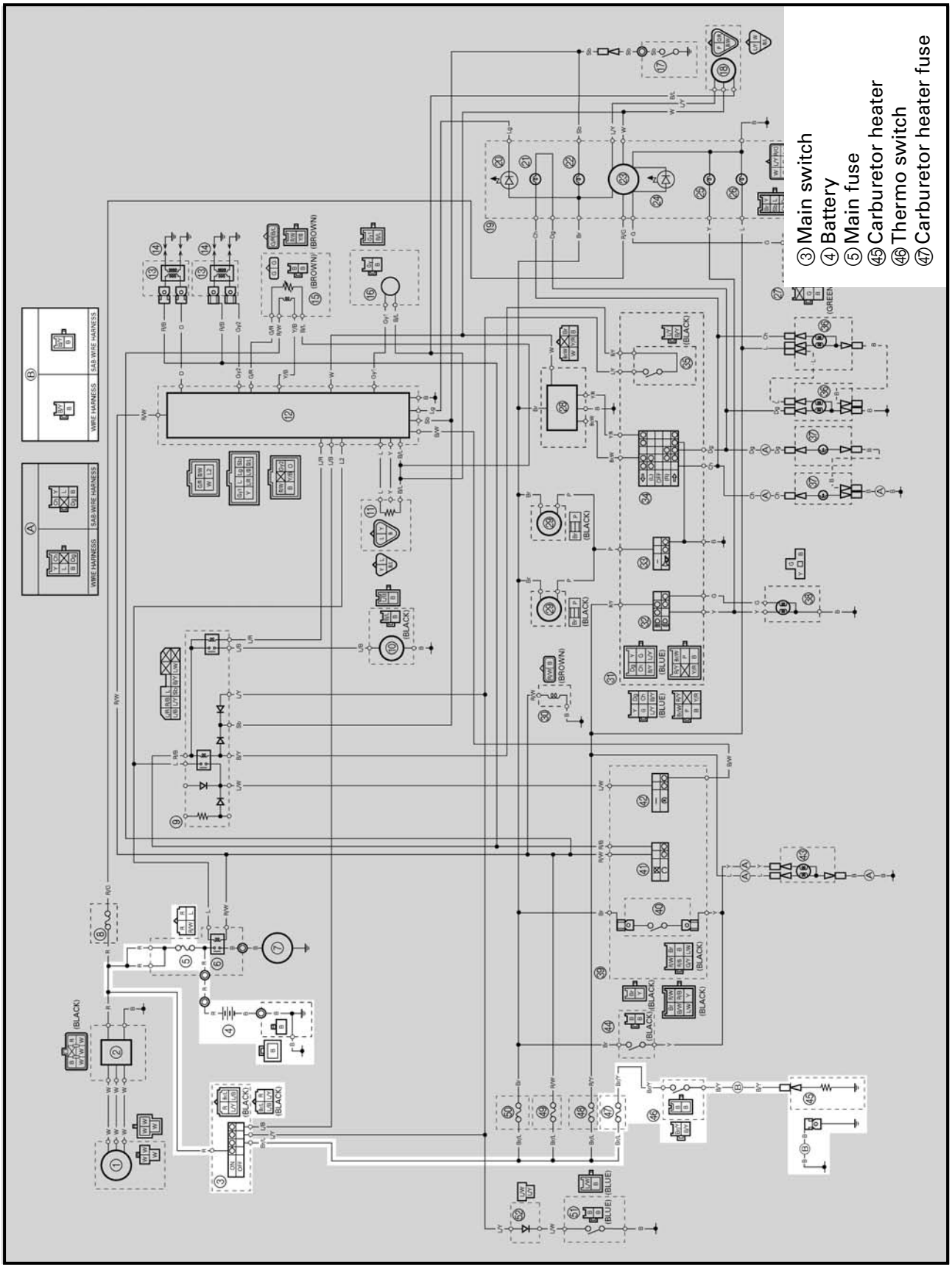

EAS00821
TROUBLESHOOTING

The carburetor heating system fails to operate.

Check:
1. Main and carburetor heater fuses
2. Battery
3. Main switch
4. Thermo switch
5. Carburetor heater
6. Wiring
   (of the entire carburetor heating system)

NOTE:
- Before troubleshooting, remove the following part(s).
1) rider seat
2) fuel tank
3) carburetor
4) left side cover
- Troubleshoot with the following special tool(s).

Pocket tester
YU-03112

EAS00738
1.Main and carburetor heater fuses

- Check the main and carburetor heater fuses for continuity.
  Refer to "CHECKING THE FUSES" in chapter 3.
- Are the main and carburetor heater fuses OK?

YES → NO → Replace the fuse(s).

EAS00739
2.Battery

- Check the condition of the battery.
  Refer to "CHECKING AND CHARGING THE BATTERY" in chapter 3.

Minimum open circuit voltage
12.8 V or more at 20 °C (68 °F)

- Is the battery OK?

YES → NO →
- Clean the battery terminals.
- Recharge or replace the battery.

EAS00749
3.Main switch

- Check the main switch for continuity.
  Refer to "CHECKING THE SWITCHES".
- Is the main switch OK?

YES → NO → Replace the main switch.

EAS00823
4.Thermo switch

- Remove the thermo switch from the plastic bracket.
- Connect the pocket tester to the thermo switch coupler as shown.

Tester positive lead → black ①
Tester negative lead → black ②

- Immerse the thermo switch in a container filled with water ③.
- Place a thermometer ④ in the water.
- Slowly heat the water, than let it cool to the specified temperature as indicated in the table.
- Check the thermo switch for continuity at the temperatures indicated in the table.

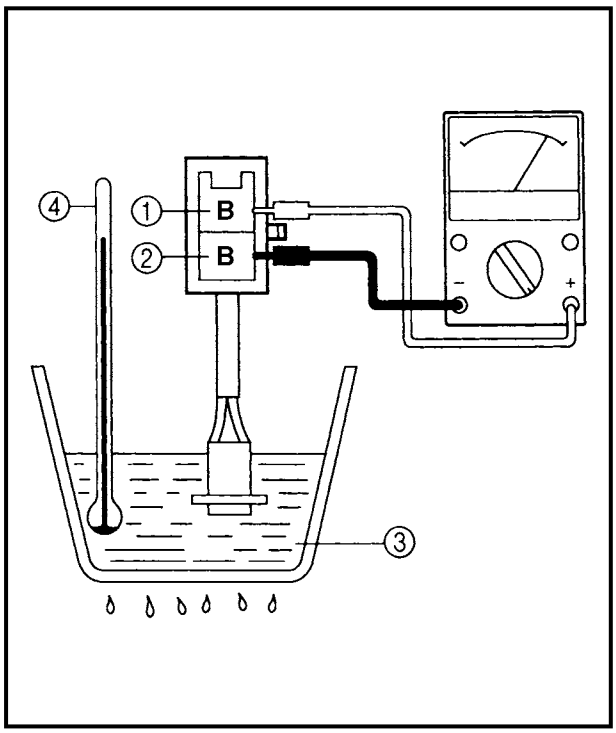

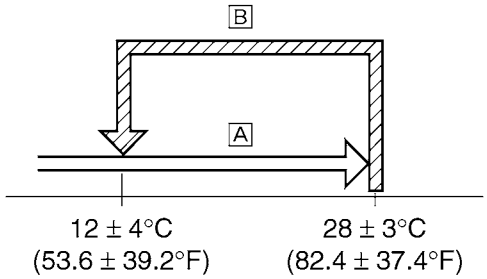

A The thermo switch circuit is open.
B The thermo switch circuit is closed.

Test step	Water temperature	Continuity
1	Less than 23 ± 3 °C (73.4 ± 5.4 °F)	YES
2	More than 23 ± 3 °C (73.4 ± 5.4 °F)	NO
3	More than 12 ± 4 °C (53.6 ± 7.2 °F)	NO
4	Less than 12 ± 4 °C (53.6 ± 7.2 °F)	YES

Test steps 1 & 2: Heating phase
Test steps 3 & 4: Cooling phase

⚠ WARNING

- **Handle the thermo switch with special care.**
- **Never subject the thermo switch to strong shocks. If the thermo switch is dropped, replace it.**

- Does the thermo switch operate properly?

YES ⇩ NO ⬇

Replace the thermo switch.

5.Carburetor heater

- Remove the carburetor heater from the carburetor.
- Connect the pocket tester to the carburetor heater as shown.

Tester positive probe →
carburetor heater terminal ①
Tester negative probe →
carburetor heater body ②

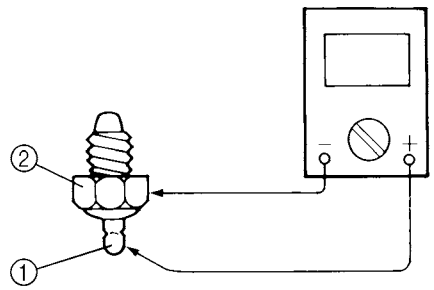

- Measure carburetor heater resistance.

Carburetor heater resistance
12 V 30 W: 6 ~ 10 Ω at 20°C (68°F)

- Is the carburetor heater OK?

YES ⇩ NO ⬇

Replace the carburetor heater.

EAS00754

6.Wiring

- Check the entire carburetor heating system's wiring.
  Refer to "CIRCUIT DIAGRAM".
- Is the carburetor heating system's wiring properly connected and without defects?

YES → This circuit is OK.

NO → Properly connect or repair the carburetor heating system's wiring.

EB812000

SELF-DIAGNOSIS

The XV16AL/XV16ALC/XV16ATL/XV16ATLC features a self-diagnosing system for the following circuit(s):

- throttle position sensor
- speed sensor
- decompression solenoid
- fuel level meter

If any of these circuits is defective, the respective condition code will be displayed by the engine trouble indicator light or fuel level indicator light when the main switch is set to “ON” (irrespective of whether the engine is running or not).

Indicator light	Circuit	Defect(s)	System response	Condition code	
				When engine is stopped	When engine is running
	Throttle position sensor	• Disconnected • Short-circuit • Locked	• The ignitor unit stays set to the wide-open throttle ignition timing. The motorcycle can be ridden. • The engine trouble indicator light displays the condition code.	Blinks in patterns of 3	Lights up
	Speed sensor	• Abnormal pulse • Disconnected • Short-circuit	• The engine speed limiter sets in approximately 4,400 rpm. • The engine trouble indicator light displays the condition code.	Blinks in patterns of 4	Lights up
	Decompression solenoid	• Disconnected • Short-circuit • Over heated solenoid • Disconnected thermistor in solenoid • Short-circuited thermistor in solenoid	• The decompression solenoid does not move. • The starter motor does not operate. • The engine trouble indicator light displays the condition code.	Blinks in patterns of 6	Lights up
	Fuel level meter	• Disconnected • Short-circuit	• The fuel level meter displays the empty position. • The fuel level indicator light displays the condition code.	Blinks in patterns of 8	Blinks in patterns of 8

NOTE:

When the main switch is turned on, the engine trouble indicator light and fuel level indicator light in the meter assembly normally come on for 1.4 seconds and then go off. However, if there is a malfunction, the corresponding indicator light then begins flashing when the engine is stopped or comes on when the engine is running.

Display order on the engine trouble indicator light and fuel level indicator light

① Engine trouble indicator light
② Fuel level indicator light

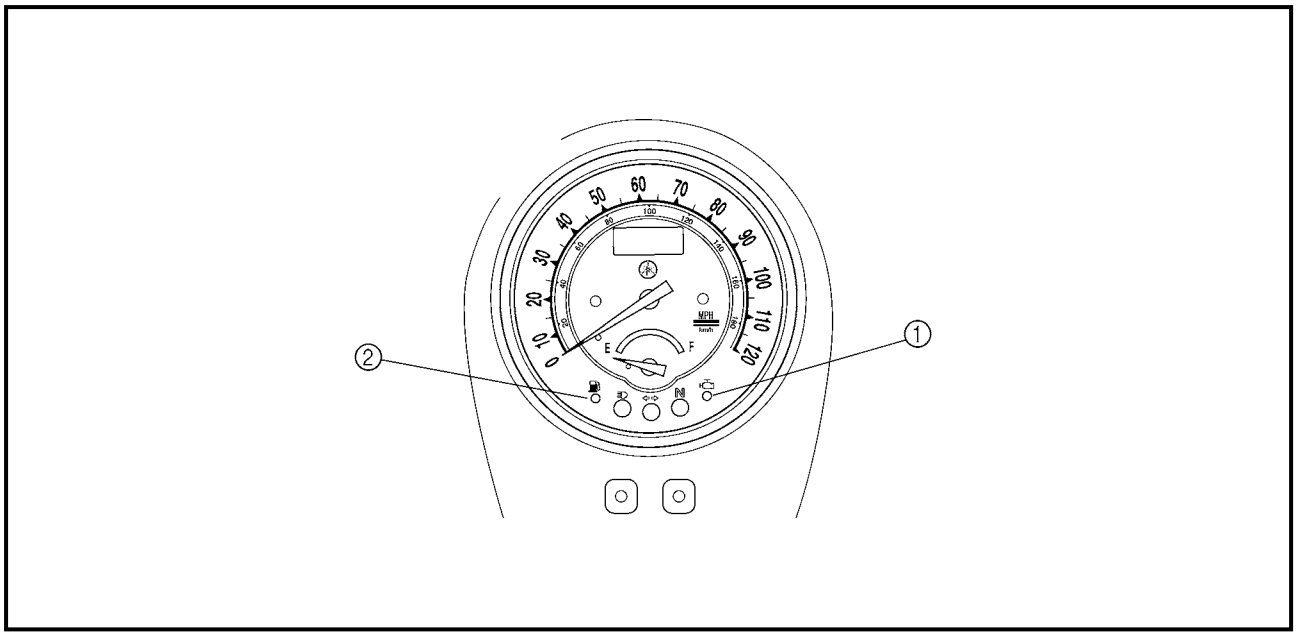

① Indicator lights check.....1.4 seconds
② Light off .....3 seconds
③ Condition code.....First fault code (3 = throttle position sensor)
④ Condition code.....Next fault code (4 = speed sensor)
⑤ Light on .....0.5 second
⑥ Light off .....0.5 second
A Light on
B Light off
C Main switch is turned on
D Repetition

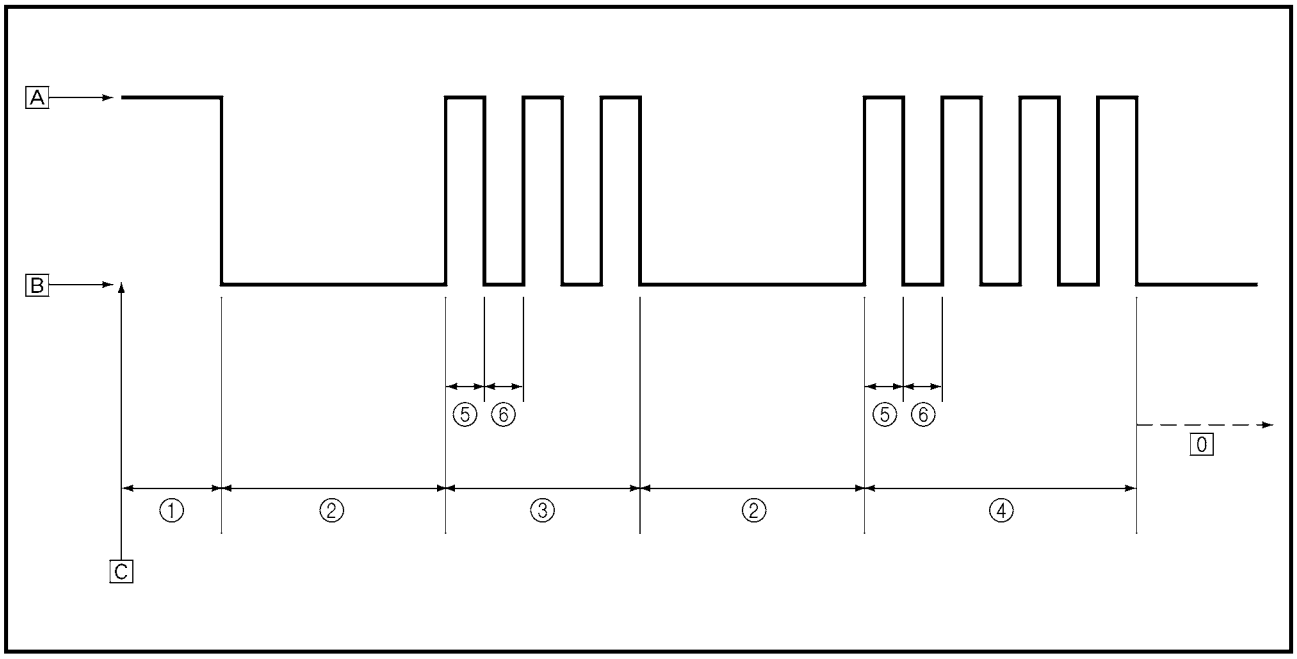

EB812010
TROUBLESHOOTING

The engine trouble indicator light or the fuel level indicator light starts to blink, display the self-diagnosis sequence.

Check:
1. throttle position sensor
2. speed sensor
3. decompression solenoid
4. fuel level meter

NOTE:
- Before troubleshooting, remove the following part(s):
1) rider seat
2) fuel tank
3) left side cover
- Troubleshoot with the following special tool(s).

Pocket tester
YU-03112

EB812020
1. Throttle position sensor
CIRCUIT DIAGRAM

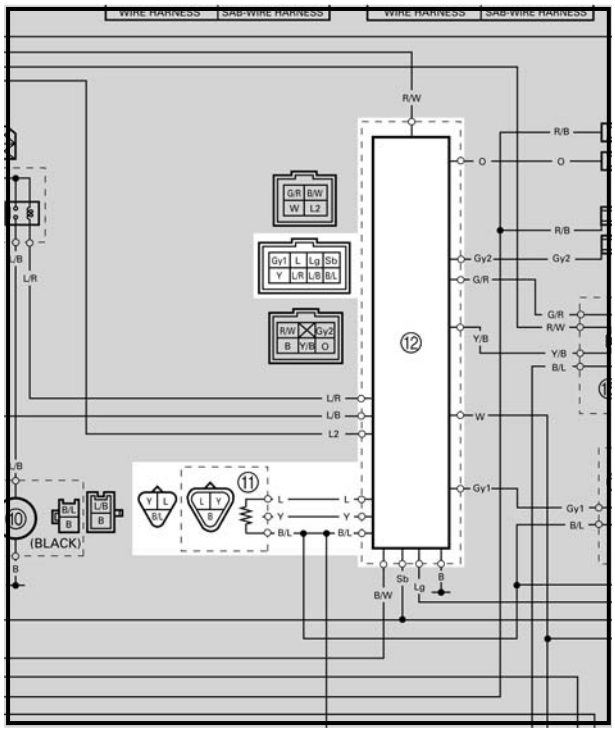

⑪ Throttle position sensor
⑫ Ignitor unit

EAS00843

1.Wire harness

- Check the wire harness for continuity. Refer to "CIRCUIT DIAGRAM".
- Is the wire harness OK?

YES ⇩ NO ⇩

Repair or replace the wire harness.

EB812401

2.Throttle position sensor

- Check the throttle position sensor for continuity.
  Refer to "CHECKING AND ADJUSTING THE THROTTLE POSITION SENSOR" in chapter 6.
- Is the throttle position sensor OK?

YES ⇩ NO ⇩

Replace the ignitor unit.	Replace the throttle position sensor.

2. Speed sensor

CIRCUIT DIAGRAM

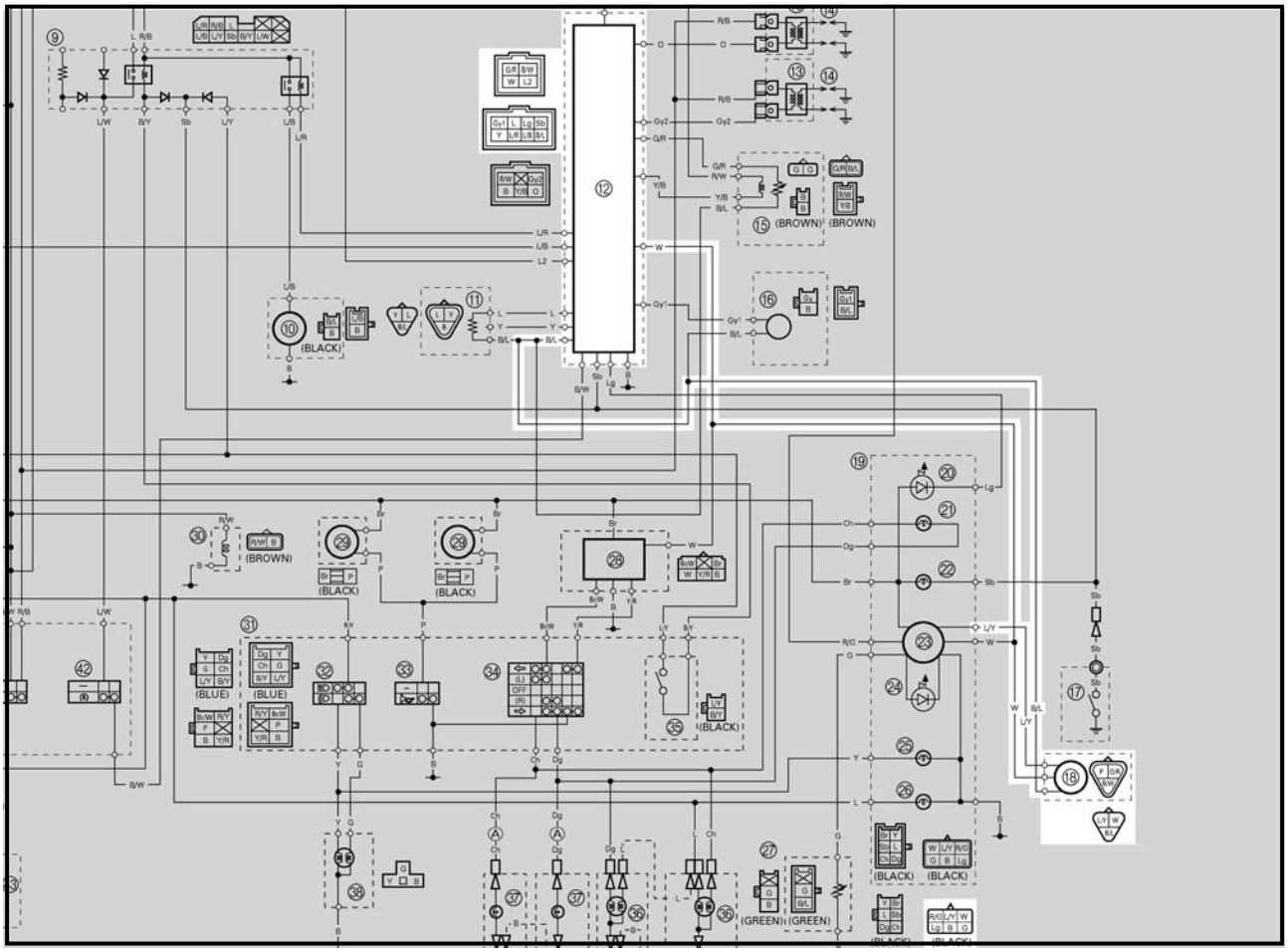

⑫ Ignitor unit
⑱ Speed sensor

EAS00843

1.Wire harness
• Check the wire harness for continuity. Refer to “CIRCUIT DIAGRAM”. • Is the wire harness OK?

YES ⇩ | NO ⬇

Replace the speed sensor.

⬇ BAD

Replace the ignitor unit.	Repair or replace the wire harness.

7

3. Decompression solenoid

CIRCUIT DIAGRAM

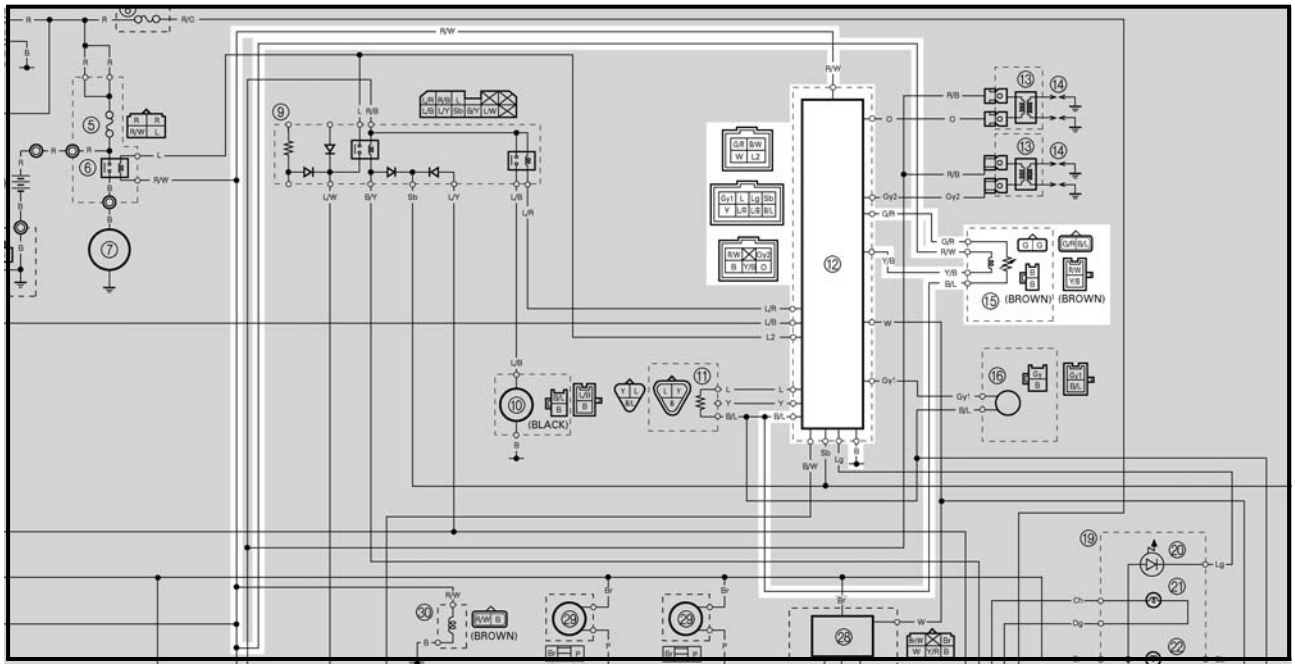

⑫ Ignitor unit
⑮ Decompression solenoid

EAS00843

1.Wire harness

- Check the wire harness for continuity. Refer to "CIRCUIT DIAGRAM".
- Is the wire harness OK?

YES ⇩ NO ⇩

Repair or replace the wire harness.

2.Decompression solenoid (thermistor)

- Disconnect the decompression solenoid couplers from the wire harness.
- Connect the pocket tester (Ω × 10) to the decompression solenoid coupler as shown.

Tester positive probe → green ①
Tester negative probe → green ②

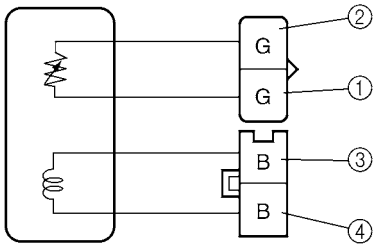

- Measure the decompression solenoid resistance.

Decompression solenoid resistance (thermistor)
68.75 ~ 78.75 Ω at 25 °C (77 °F)

NOTE:
The resistance value for the thermistor changes when the temperature changes; therefore, measure the decompression solenoid resistance at the specified temperature.

- Connect the pocket tester (Ω × 1) to the decompression solenoid coupler as shown.

Tester positive probe → black ③
Tester negative probe → black ④

Decompression solenoid resistance
1.2 Ω at 20 °C (68 °F)

- Check the decompression solenoid for continuity.
- Is the decompression solenoid OK?

YES → Replace the ignitor unit.

NO → Replace the decompression solenoid.

EB812040

4. Fuel level meter

CIRCUIT DIAGRAM

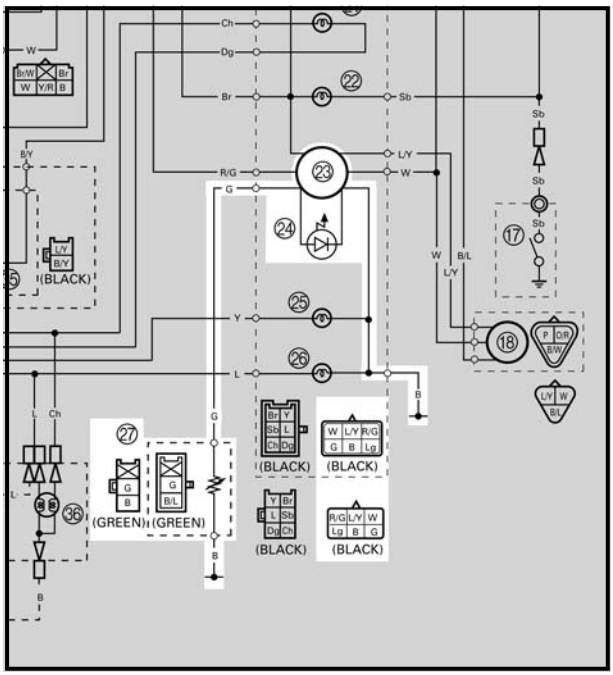

㉓ Speedometer assembly (fuel level meter)
㉔ Fuel level indicator light
㉗ Fuel sender

EB812403

1.Fuel level indicator light LED

- Check the LED of the fuel level indicator light.
  Refer to "CHECKING THE LEDs".
- Is the fuel level indicator light LED OK?

YES →

NO → Repair the meter assembly.

2.Fuel sender

- Disconnect the fuel sender coupler from the wire harness.
- Drain the fuel from the fuel tank and remove the fuel sender from the fuel tank.
- Connect the pocket tester (Ω × 10) to the fuel sender coupler.

Tester positive probe → green ①
Tester negative probe → black/blue ②

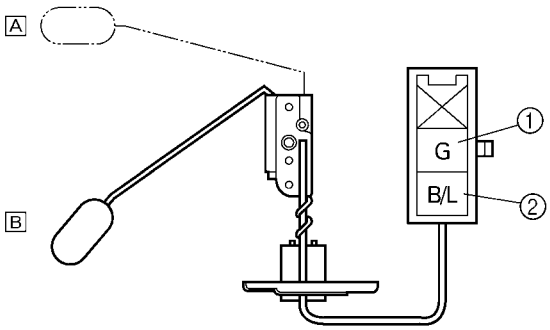

- Measure the fuel sender resistance.

Fuel sender resistance
Full position of the float A
11 ~ 13 Ω at 20 °C (68 °F)
Empty position of the float B
140 ~ 143 Ω at 20 °C (68 °F)

- Is the fuel sender OK?

YES →

NO → Replace the fuel sender.

EAS00843

3.Wire harness
• Check the wire harness for continuity. Refer to “CIRCUIT DIAGRAM”. • Is the wire harness OK?

YES → Replace the meter assembly.

NO → Replace or replace the wire harness.

CONTENTS
TROUBLESHOOTING

STARTING PROBLEMS 8-1
ENGINE 8-1
FUEL SYSTEM 8-1
ELECTRICAL SYSTEMS 8-2

INCORRECT ENGINE IDLING SPEED 8-2
ENGINE 8-2
FUEL SYSTEM 8-2
ELECTRICAL SYSTEMS 8-2

POOR MEDIUM-AND-HIGH-SPEED PERFORMANCE 8-3
ENGINE 8-3
FUEL SYSTEM 8-3

FAULTY GEAR SHIFTING 8-3
SHIFTING IS DIFFICULT 8-3
SHIFT PEDAL DOES NOT MOVE 8-3
JUMPS OUT OF GEAR 8-3

FAULTY CLUTCH 8-3
CLUTCH SLIPS 8-3
CLUTCH DRAGS 8-3

OVERHEATING 8-4
ENGINE 8-4
FUEL SYSTEM 8-4
CHASSIS 8-4
ELECTRICAL SYSTEMS 8-4

POOR BRAKING PERFORMANCE 8-4

FAULTY FRONT FORK LEGS 8-4
LEAKING OIL 8-4
MALFUNCTION 8-4

UNSTABLE HANDLING 8-5

FAULTY LIGHTING OR SIGNALING SYSTEM 8-5
HEADLIGHT DOES NOT LIGHT 8-5
HEADLIGHT BULB BURNT OUT 8-5
TAIL/BRAKE LIGHT DOES NOT LIGHT 8-5
TAIL/BRAKE LIGHT BULB BURNT OUT 8-5
TURN SIGNAL DOES NOT LIGHT 8-5
TURN SIGNAL BLINKS SLOWLY 8-5
TURN SIGNAL REMAINS LIT 8-5
TURN SIGNAL BLINKS QUICKLY 8-5
HORN DOES NOT SOUND 8-5

EAS00844

TROUBLESHOOTING

NOTE:

The following guide for troubleshooting does not cover all the possible causes of trouble. It should be helpful, however, as a guide to basic troubleshooting. Refer to the relative procedure in this manual for checks, adjustments, and replacement of parts.

STARTING PROBLEMS

ENGINE

Cylinders and cylinder heads (See page 5-39 to 5-43 and 5-53 to 5-59)
- Loose spark plug
- Loose cylinder head or cylinder
- Damaged cylinder head gasket
- Damaged cylinder gasket
- Worn or damaged cylinder
- Incorrect valve clearance
- Incorrectly sealed valve
- Incorrect valve-to-valve-seat contact
- Incorrect valve timing
- Faulty valve spring
- Seized valve

Pistons and piston rings (See page 5-53 to 5-59)
- Incorrectly installed piston ring
- Damaged, worn, or fatigued piston ring
- Seized piston ring
- Seized or damaged piston

Air filter (See page 3-7 and 3-29)
- Incorrectly installed air filter
- Clogged air filter element

Crankcase and crankshaft (See page 5-100 to 5-107 and 5-114 to 5-121)
- Incorrectly assembled crankcase
- Seized crankshaft

FUEL SYSTEM

Fuel tank (See page 3-6)
- Empty fuel tank
- Clogged fuel filter
- Clogged fuel strainer
- Clogged fuel tank breather hose
- Clogged rollover valve
- Clogged rollover valve hose
- Deteriorated or contaminated fuel

Fuel pump (See page 7-46 to 7-50)
- Faulty fuel pump
- Faulty fuel pump relay

Fuel cock (See page 6-19 to 6-20)
- Clogged or damaged fuel hose

Carburetor (See page 6-1 to 6-20)
- Deteriorated or contaminated fuel
- Clogged pilot jet
- Clogged pilot air passage
- Sucked-in air
- Damaged float
- Worn needle valve
- Incorrectly installed needle valve seat
- Incorrect fuel level
- Incorrectly installed pilot jet
- Clogged starter jet
- Faulty starter plunger
- Incorrectly adjusted starter cable

ELECTRICAL SYSTEMS

Battery (See page 3-51 to 3-56)
- Faulty battery
- Discharged battery

Fuses (See page 3-56 to 3-58)
- Blown, damaged, or incorrect fuse
- Incorrectly installed fuse

Spark plugs (See page 3-14 to 3-15)
- Incorrect spark plug gap
- Incorrect spark plug heat range
- Fouled spark plug
- Worn or damaged electrode
- Worn or damaged insulator
- Faulty spark plug cap

Ignition coils (See page 7-14 to 7-15)
- Damaged ignition coil
- Broken or shorted primary or secondary coils
- Faulty spark plug lead

Ignition system (See page 7-12 to 7-16)
- Faulty ignitor unit
- Faulty pickup coil

Switches and wiring (See page 7-7 to 7-8)
- Faulty main switch
- Faulty engine stop switch
- Broken or shorted wiring
- Faulty neutral switch
- Faulty start switch
- Faulty sidestand switch
- Faulty clutch switch
- Incorrectly grounded circuit
- Loose connections

Starting system (See page 7-17 to 7-27)
- Faulty starter motor
- Faulty starter relay
- Faulty starting circuit cutoff relay
- Faulty starter clutch

EAS00846

INCORRECT ENGINE IDLING SPEED

ENGINE

Cylinders and cylinder heads (See page 5-39 to 5-43 and 5-53 to 5-59)
- Incorrect valve clearance
- Damaged valve train components

Air filter (See page 3-7 and 3-29)
- Clogged air filter element

FUEL SYSTEM

Carburetor (See page 6-1 to 6-20)
- Faulty starter plunger
- Loose or clogged pilot jet
- Loose or clogged pilot air jet
- Damaged or loose carburetor joint
- Incorrectly adjusted engine idling speed (throttle stop screw)
- Incorrect throttle cable free play
- Flooded carburetor
- Faulty air induction system

ELECTRICAL SYSTEMS

Battery (See page 3-51 to 3-56)
- Incorrectly charged battery
- Faulty battery

Spark plugs (See page 3-14 to 3-15)
- Incorrect spark plug gap
- Incorrect spark plug heat range
- Fouled spark plug
- Worn or damaged electrode
- Worn or damaged insulator
- Faulty spark plug cap

Ignition coils (See page 7-14 to 7-15)
- Broken or shorted primary or secondary coils
- Faulty spark plug lead
- Damaged ignition coil

Ignition system (See page 7-12 to 7-16)
- Faulty ignitor unit
- Faulty pickup coil

EAS00848
POOR MEDIUM-AND-HIGH-SPEED PERFORMANCE

Refer to “STARTING PROBLEMS”.

ENGINE

Air filter (See page 3-7 and 3-29)
- Clogged air filter element

FUEL SYSTEM

Carburetor (See page 6-1 to 6-20)
- Faulty diaphragm
- Incorrect fuel level
- Loose or clogged main jet

Fuel pump (See page 7-46 to 7-50)
- Faulty fuel pump

EAS00850
FAULTY GEAR SHIFTING

SHIFTING IS DIFFICULT

Refer to “CLUTCH DRAGS”.

SHIFT PEDAL DOES NOT MOVE

Shift shaft (See page 5-74 to 5-76)
- Incorrectly adjusted shift rod
- Bent shift shaft

Shift drum and shift forks (See page 5-122 to 5-127)
- Foreign object in a shift drum groove
- Seized shift fork
- Bent shift fork guide bar

Transmission (See page 5-122 to 5-127)
- Seized transmission gear
- Foreign object between transmission gears
- Incorrectly assembled transmission

JUMPS OUT OF GEAR

Shift shaft (See page 5-74 to 5-76)
- Incorrect shift pedal position
- Incorrectly returned stopper lever

Shift forks (See page 5-122 to 5-127)
- Worn shift fork

Shift drum (See page 5-122 to 5-127)
- Incorrect axial play
- Worn shift drum groove

Transmission (See page 5-122 to 5-127)
- Worn gear dog

EAS00851
FAULTY CLUTCH

CLUTCH SLIPS

Clutch (See page 5-60 to 5-73)
- Incorrectly assembled clutch
- Incorrectly adjusted clutch cable
- Loose or fatigued clutch spring
- Worn friction plate
- Worn clutch plate

Engine oil (See page 3-20 to 3-21)
- Incorrect oil level
- Incorrect oil viscosity (low)
- Deteriorated oil

CLUTCH DRAGS

Clutch (See page 5-60 to 5-73)
- Unevenly tensioned clutch springs
- Warped pressure plate
- Bent clutch plate
- Swollen friction plate
- Bent clutch push rod
- Damaged clutch boss
- Burnt primary driven gear bushing
- Match marks not aligned

Engine oil (See page 3-20 to 3-21)
- Incorrect oil level
- Incorrect oil viscosity (high)
- Deteriorated oil

EAS00855
OVERHEATING

ENGINE

Cylinder heads and pistons (See page 5-53 to 5-59)
- Heavy carbon buildup

Engine oil (See page 3-20 to 3-21)
- Incorrect oil level
- Incorrect oil viscosity
- Inferior oil quality

FUEL SYSTEM

Carburetor (See page 6-1 to 6-20)
- Incorrect main jet setting
- Incorrect fuel level
- Damaged or loose carburetor joint

Air filter (See page 3-7 and 3-29)
- Clogged air filter element

CHASSIS

Brakes (See page 3-34 to 3-38 and 4-22 to 4-54)
- Dragging brake

ELECTRICAL SYSTEMS

Spark plugs (See page 3-14 to 3-15)
- Incorrect spark plug gap
- Incorrect spark plug heat range

Ignition system (See page 7-12 to 7-16)
- Faulty ignitor unit

EAS00857
POOR BRAKING PERFORMANCE (See page 3-34 to 3-38 and 4-22 to 4-54)

- Worn brake pad
- Worn brake disc
- Air in hydraulic brake system
- Leaking brake fluid
- Faulty brake caliper seal
- Loose union bolt
- Damaged brake hose
- Oil or grease on the brake disc
- Oil or grease on the brake pad
- Incorrect brake fluid level

EAS00860
FAULTY FRONT FORK LEGS (See page 3-43 to 3-44 and 4-55 to 4-66)

LEAKING OIL
- Bent, damaged, or rusty inner tube
- Damaged outer tube
- Incorrectly installed oil seal
- Damaged oil seal lip
- Incorrect oil level (high)
- Loose damper rod assembly bolt
- Damaged cartridge cylinder bolt copper washer
- Damaged cap bolt O-ring

MALFUNCTION
- Bent or damaged inner tube
- Bent or damaged outer tube
- Damaged fork spring
- Worn or damaged outer tube bushing
- Bent or damaged cartridge
- Incorrect oil viscosity
- Incorrect oil level

EAS00864
UNSTABLE HANDLING

Handlebar (See page 4-67 to 4-72)
- Bent or incorrectly installed handlebar

Steering head components (See page 3-41 to 3-43 and 4-73 to 4-78)
- Incorrectly installed upper bracket
- Incorrectly installed lower bracket (incorrectly tightened ring nut)
- Bent steering stem
- Damaged ball bearing or bearing race

Front fork legs (See page 3-43 to 3-44 and 4-55 to 4-66)
- Uneven oil levels (both front fork legs)
- Unevenly tensioned fork spring (both front fork legs)
- Damaged fork spring
- Bent or damaged inner tube
- Bent or damaged outer tube

Swingarm (See page 4-79 to 4-89)
- Worn bearing or bushing
- Bent or damaged swingarm

Rear shock absorber assembly (See page 4-79 to 4-89)
- Faulty rear shock absorber spring
- Leaking oil or gas

Tires (See page 3-45 to 3-48)
- Uneven tire pressures (front and rear)
- Incorrect tire pressure
- Uneven tire wear

Wheels (See page 3-48 to 3-49 and 4-1 to 4-21)
- Incorrect wheel balance
- Deformed cast wheel
- Damaged wheel bearing
- Bent or loose wheel axle
- Excessive wheel runout

Frame
- Bent frame
- Damaged steering head pipe
- Incorrectly installed bearing race

EAS00866
FAULTY LIGHTING OR SIGNALING SYSTEM (See page 7-31 to 7-45)

HEADLIGHT DOES NOT LIGHT
- Wrong headlight bulb
- Too many electrical accessories
- Hard charging
- Incorrect connection
- Incorrectly grounded circuit
- Poor contacts (main or dimmer switch)
- Burnt-out headlight bulb

HEADLIGHT BULB BURNT OUT
- Wrong headlight bulb
- Faulty battery
- Faulty rectifier/regulator
- Incorrectly grounded circuit
- Faulty main switch
- Faulty dimmer switch
- Headlight bulb life expired

TAIL/BRAKE LIGHT DOES NOT LIGHT
- Wrong tail/brake light bulb
- Too many electrical accessories
- Incorrect connection
- Burnt-out tail/brake light bulb

TAIL/BRAKE LIGHT BULB BURNT OUT
- Wrong tail/brake light bulb
- Faulty battery
- Incorrectly adjusted rear brake light switch
- Tail/brake light bulb life expired

TURN SIGNAL DOES NOT LIGHT
- Faulty turn signal switch
- Faulty turn signal relay
- Burnt-out turn signal bulb
- Incorrect connection
- Damaged or faulty wire harness
- Incorrectly grounded circuit
- Faulty battery
- Blown, damaged, or incorrect fuse

TURN SIGNAL BLINKS SLOWLY
- Faulty turn signal relay
- Faulty main switch
- Faulty turn signal switch
- Incorrect turn signal bulb

TURN SIGNAL REMAINS LIT
- Faulty turn signal relay
- Burnt-out turn signal bulb

TURN SIGNAL BLINKS QUICKLY
- Incorrect turn signal bulb
- Faulty turn signal relay
- Burnt-out turn signal bulb

HORN DOES NOT SOUND
- Incorrectly adjusted horn
- Damaged or faulty horn
- Faulty main switch
- Faulty horn switch
- Faulty battery
- Blown, damaged, or incorrect fuse
- Faulty wire harness

XV16AL/XV16ALC/XV16ATL/XV16ATLC WIRING DIAGRAM (For USA and CDN)

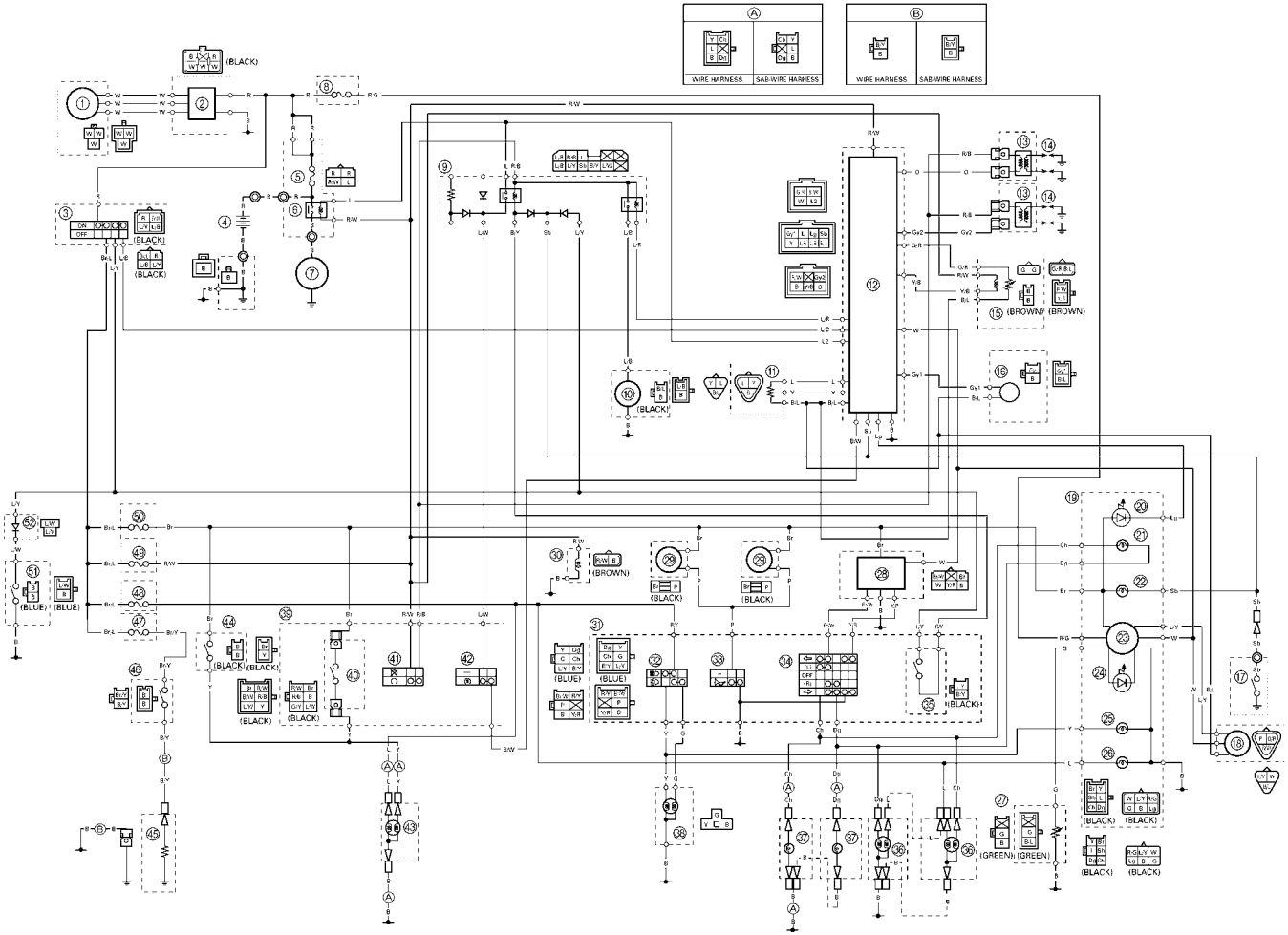

① Generator
② Rectifier/regulator
③ Main switch
④ Battery
⑤ Main fuse
⑥ Starter relay
⑦ Starter motor
⑧ Backup fuse
⑨ Relay unit
⑩ Fuel pump
⑪ Throttle position sensor
⑫ Ignitor unit
⑬ Ignition coil
⑭ Spark plug
⑮ Decompression solenoid
⑯ Pickup coil
⑰ Neutral switch
⑱ Speed sensor
⑲ Meter assembly
⑳ Engine trouble indicator light
㉑ Turn signal indicator light
㉒ Neutral indicator light
㉓ Speedometer assembly (speedometer, combination meter and fuel level meter)
㉔ Fuel level indicator light
㉕ High beam indicator light
㉖ Meter light
㉗ Fuel sender
㉘ Turn signal relay
㉙ Horn
㉚ Solenoid
㉛ Left handlebar switch
㉜ Dimmer switch
㉝ Horn switch
㉞ Turn signal switch
㉟ Clutch switch
㊱ Front turn signal/position light
㊲ Rear turn signal light
㊳ Headlight
㊴ Right handlebar switch
㊵ Front brake light switch
㊶ Engine stop switch
㊷ Start switch
㊸ Tail/brake light
㊹ Rear brake light switch
㊺ Carburetor heater
㊻ Thermo switch
㊼ Carburetor heater fuse
㊽ Headlight fuse
㊾ Ignition fuse
㊿ Signaling system fuse
(51) Sidestand switch
(52) Diode

COLOR CODE

B ..... black	P ..... pink	Br/B ..... brown/black	L/W ..... blue/white
Br ..... brown	R ..... red	Br/L ..... brown/blue	L/Y ..... blue/yellow
Ch ..... chocolate	Sb ..... sky blue	Br/W ..... brown/white	R/B ..... red/black
Dg ..... dark green	W ..... white	Br/Y ..... brown/yellow	R/G ..... red/green
G ..... green	Y ..... yellow	G/B ..... green/black	R/W ..... red/white
Gy ..... gray	B/L ..... black/blue	G/R ..... green/red	R/Y ..... red/yellow
L ..... blue	B/R ..... black/red	G/Y ..... green/yellow	Y/B ..... yellow/black
Lg ..... light green	B/W ..... black/white	L/B ..... blue/black	Y/R ..... yellow/red
O ..... orange	B/Y ..... black/yellow	L/R ..... blue/red	

YAMAHA MOTOR CO., LTD.
2500 SHINGAI IWATA SHIZUOKA JAPAN

PRINTED IN U.S.A.